© – TE Connectivity. All Rights Reserved.

REVISIONS					
P	LTR	DESCRIPTION	DATE	DWN	APVD
	B	REVISED PER ECR-24-213594	03JUL2024	RK	FJS

1 CAVITY IDENTIFICATION ON FRONT AND REAR FACE.

2 MATERIALS:
HOUSING: NYLON, UL94 V-0, BLACK
CONTACT SPRING: STAINLESS STEEL
CONTACT BODY AND POST: BRASS
THREADED INSERTS: BRASS

3 FINISHES.
CONTACT BODY: .00076 [.000030] MIN PRECIOUS METAL PLATE FOR A LENGTH OF 5.08 [.200] MIN FROM MATING END OF PIN GOLD FLASH ON REMAINDER OF CONTACT. BOTH OVER .00127 [000050] MIN NICKEL
CONTACT POST: .00254 [.000100] MIN TIN OVER .00127 [.000050] MIN NICKEL.

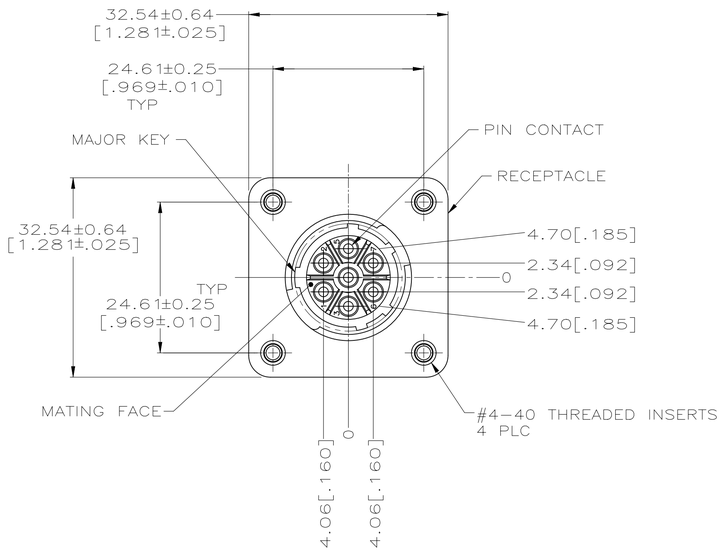

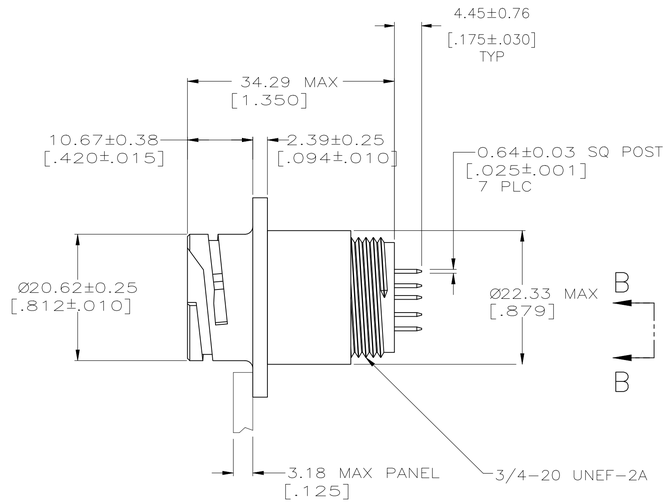

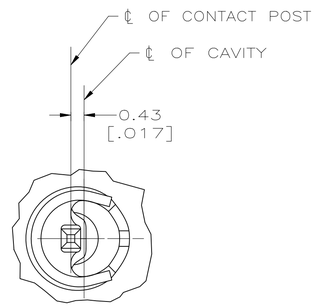

VIEW B–B
SCALE 10:1
5 PLC

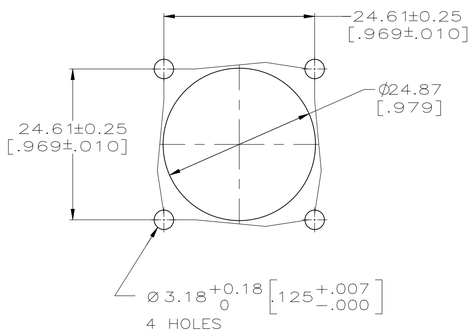

RECOMMENDED PANEL CUTOUT

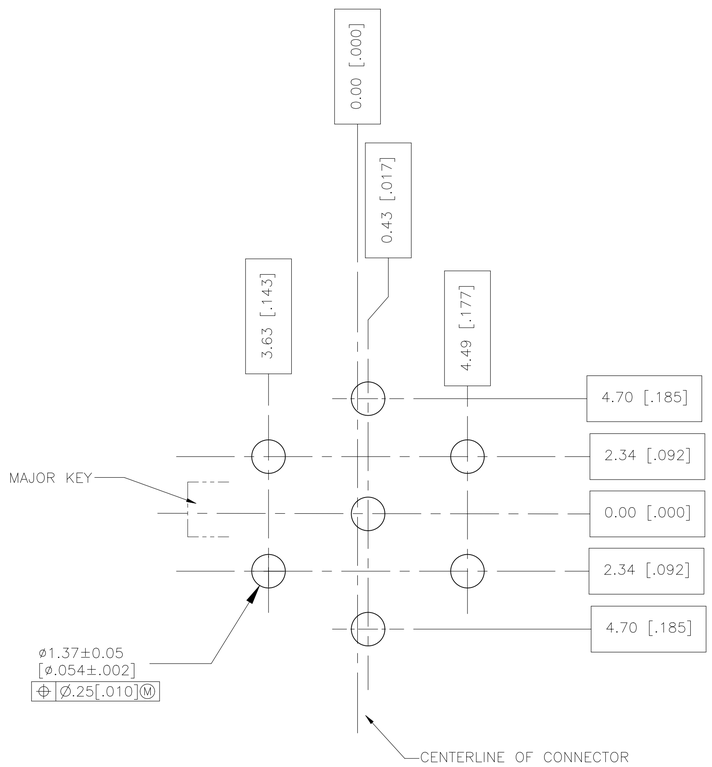

RECOMMENDED BOARD LAYOUT
SCALE: 4:1

2267121–1
PART NUMBER

THIS DRAWING IS A CONTROLLED DOCUMENT.

DIMENSIONS: mm [INCHES]

TOLERANCES UNLESS OTHERWISE SPECIFIED:
0 PLC ± –
1 PLC ± –
2 PLC ± 0.13[.005]
3 PLC ± –
4 PLC ± –
ANGLES ± –

MATERIAL 2
FINISH 3

DWN	NAGALAKSHMI K	30MAY2014
CHK	ZITTO, MARK	30MAY2014
APVD	ZITTO, MARK	30MAY2014
PRODUCT SPEC	108–10024	
APPLICATION SPEC	114–10038	
WEIGHT	0.000000	

TE Connectivity

NAME: CPC RECPT ASSEMBLY SIZE 13–7
–
–

SIZE	CAGE CODE	DRAWING NO	RESTRICTED TO
A1	00779	C-2267121	–

CUSTOMER DRAWING | SCALE 2:1 | SHEET 1 OF 1 | REV B

4805 (1/15)