THIS DRAWING IS UNPUBLISHED. RELEASED FOR PUBLICATION
© COPYRIGHT 20 BY TYCO ELECTRONICS CORPORATION. ALL RIGHTS RESERVED.

LOC	DIST
ES	00

REVISIONS

P	LTR	DESCRIPTION	DATE	DWN	APVD
	A3	ECR-19-013351	22AUG19	E.L	W.W
	A4	ECN-24-294198	19NOV24	C.J	J.Z
	A5	ECN-24-295761	28NOV24	C.J	J.Z
	A6	ECN-25-306663	17FEB25	C.J	J.Z

CODING A-F. SOLDER SIDE

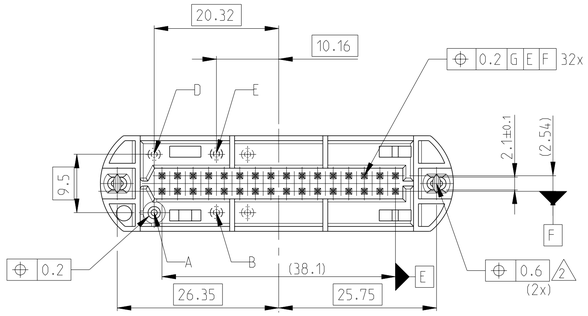

DETAIL "Y"

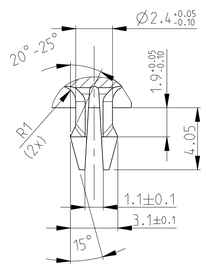

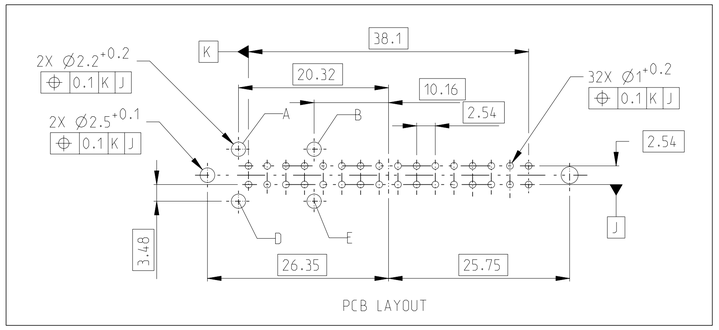

PCB LAYOUT

SECTION A-A

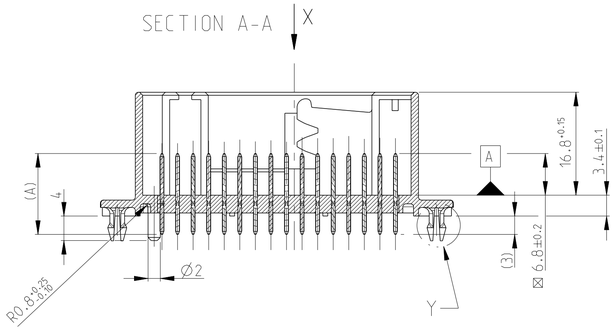

B-B

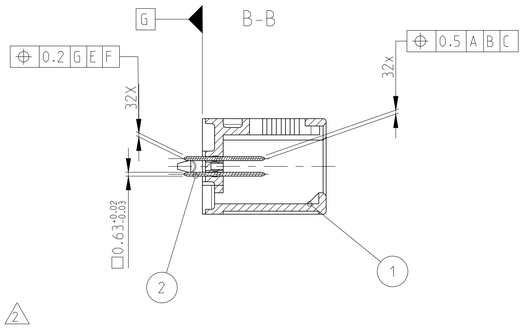

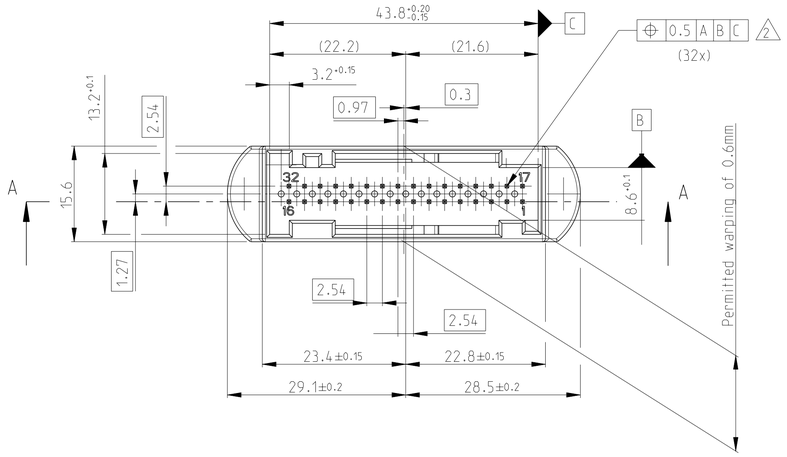

VIEW "X"

ALL CODING SHOWN, MATING SIDE

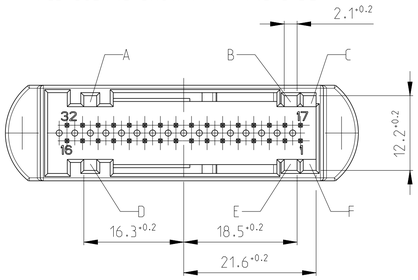

NOTES:

1 THE EXECUTION OF THE PRINTED CIRCUIT BOARD CODING AND THE CODING SLOTS, SEE TABLE

2 FORM- AND POSITION TOLERANCE; "POSITION" IS VALID ONLY FOR THE APPROPRIATED POINTS

3 SURFACE: TIN PLATING 2.0 µm - 4.0 µm (PER FINISH SPEC 112-16-2) OVER 1.27 µm - 2.2 µm NICKEL(PER FINISH SPEC 112-42-3) /ELECTRO PLATED, MAT

4. MATING PARTS SEE TE P/N2050723-X

■ 5. ELECTRICAL CONTRAL, OPEN CIRCUIT, SHORT CIRCUIT

6. SYMBOL ■ DIMENSION IS SIGNIFICANT CHARACTERISTIC
SYMBOL ⊠ DIMENSION IS MAJOR CHARACTERISTIC

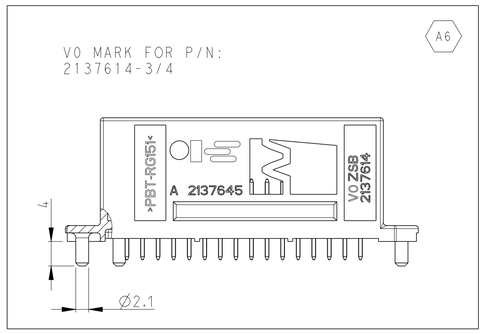

CODING										
SOLDER SIDE	D	A	D	A						
MATING SIDE	C-D	A-F	C-D	A-F						
Dim A (mm)	13.2	13.2	13.2	13.2						
X	X	X	X	2	32	AMPMODU MODU II PIN□0.63	A	CuZn30	TIN PLATING 3	
X	-	-	-	1	1	32P PIN HEADER HOUSING	A	PBT-RG151	BLUE 5012	
-	X	-	-	1	1	32P PIN HEADER HOUSING	A	PBT-RG151	GREEN 6018	
-	-	X	-	1	1	32P PIN HEADER HOUSING	A	PBT-GF15	BLUE 5012	
-	-	-	X	1	1	32P PIN HEADER HOUSING	A	PBT-GF15	GREEN 6018	
-4	-3	-2	-1	POS	QTY	DESCRIPTION	Rev	MATERIAL	SURFACE RAL	

THIS DRAWING IS A CONTROLLED DOCUMENT FOR TYCO ELECTRONICS CORPORATION. IT IS SUBJECT TO CHANGE AND THE CONTROL AN ENGINEERING ORGANIZATION SHOULD BE CONTACTED FOR THE LATEST REVISION.

DWN	E.XU	30JUN2011
CHK	R.DONG	30JUN2011
APVD	L.YIN	30JUN2011

TE Connectivity
Shanghai China

DIMENSIONS: mm

TOLERANCES UNLESS OTHERWISE SPECIFIED: n. DIN 16901 -40
0 PLC ±
1 PLC ±±
2 PLC ±±±
3 PLC ±±±±
4 PLC ±±±±±
ANGLES ±2°

MATERIAL -
FINISH -

PRODUCT SPEC -
APPLICATION SPEC -
WEIGHT -

NAME: AMPMODU MODU II PIN HEADER, ASSY, 2X16 POS.
-

SIZE	CAGE CODE	DRAWING NO	RESTRICTED TO
A1		C-2137614	-

CUSTOMER DRAWING | SCALE 2:1 | SHEET 1 OF 1 | REV A6

printed on 17 Feb 2025 16:20 (China Standard Time) from TE510287