© 2023 TE Connectivity. All Rights Reserved.

REVISIONS

P	LTR	DESCRIPTION	DATE	DWN	APVD
	A	INITIAL REVISION	24MAY2023	IS	RM

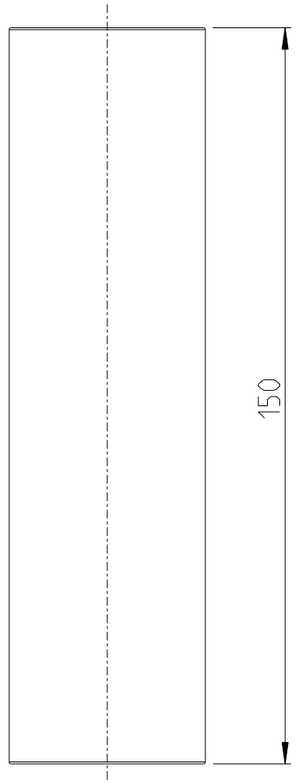

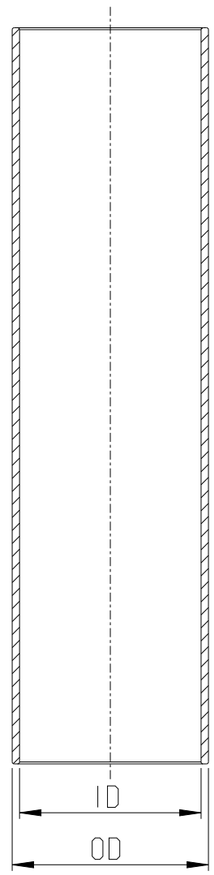

SECTION A-A

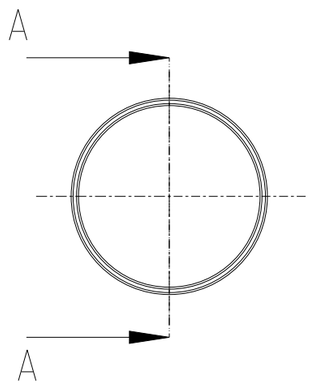

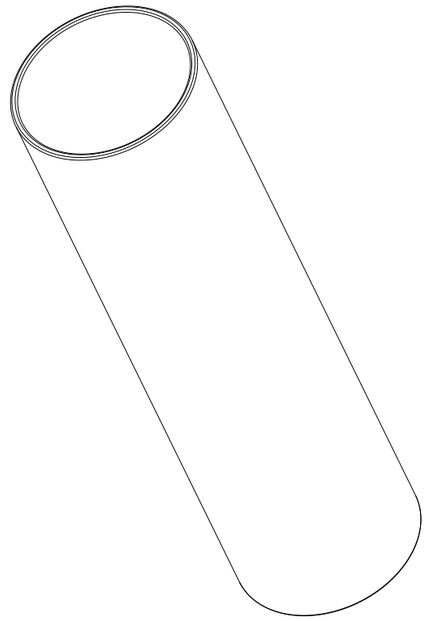

Sl.No.	TCPN	TE TYPE	ID (mm)	OD (mm)
5	2447919-5	SLC-TR50	47	50
4	2447919-4	SLC-TR40	37	40
3	2447919-3	SLC-TR30	28	30
2	2447919-2	SLC-TR20	18	20
1	2447919-1	SLC-TR14	12	14

THIS DRAWING IS A CONTROLLED DOCUMENT.

DIMENSIONS: mm

TOLERANCES UNLESS OTHERWISE SPECIFIED:
0 PLC ± -
1 PLC ± 1
2 PLC ± 1
3 PLC ± 1
4 PLC ± 1
ANGLES ± -

MATERIAL - -

FINISH - -

DWN Irfan S 24MAY2023
CHK Vishal G -
APVD Rafeeq. Mohd -
PRODUCT SPEC SLC-TR14
APPLICATION SPEC -
WEIGHT -

TE Connectivity

NAME - SLC-TR14 -

SIZE	CAGE CODE	DRAWING NO	RESTRICTED TO
A3	00779	C- 1SNP300566-0100	-

CUSTOMER DRAWING

SCALE 4:5 SHEET 1 OF 1 REV A

1470-19 (3/13)