# THERMAL INTERFACE PRODUCTS


*Thermal Compounds, Adhesives & Interface Materials* ..... *140–145*

*High Performance Thermal Compound* ..... *140*

*General & Thermal High Performance Epoxy* ..... *146–155*

*Cost-effective accessory products that facilitate installation and improve the thermal performance of both standard and custom heat dissipation components. Included are thermal joint compounds; filled epoxy systems; adhesives; thermally conductive insulating wafers, washers, pads and mounting hardware.*

# THERMAL COMPOUNDS, ADHESIVES & INTERFACE MATERIALS

## 120 SERIES

The **120 Series** Silicone Oil-Based Thermal Joint Compound fills the minute air gap between mating surfaces with a grease-like material containing zinc oxide in a silicone oil carrier. It possesses an excellent thermal resistance of only 0.05°C/W for a 0.001 in. film with an area of one square inch. There is no measurable increase in case temperature of a mounted semiconductor on a heat sink after the 6-month stabilization period (Time versus Thermal Resistivity graph below).

| TYPICAL VALUES FOR THERMAL RESISTANCE, CASE TO SINK (Øcs) WHEN THERMAL JOINT COMPOUNDS ARE USED | | |
|---|---|---|
| Case Style Characteristics | Mounting Torque in inch • pounds (N•M) | Typical Thermal Resistance (°C/W) |
| TO-3 | 8 (0.9) | 0.09 |
| TO-66 | 9 (0.9) | 0.14 |
| TO-220 | 8 (0.9) | 0.50 |
| 0.19 (4.8) stud x 0.44 (11.2) hex | 15 (1.7) | 0.16 |
| 0.25 (6.4) stud x 0.69 (17.5) hex | 30 (3.39) | 0.10 |
| 0.38 (9.7) stud x 1.06 (26.9) hex | 75 (8.47) | 0.07 |
| 0.50 (12.7) stud x 1.06 (26.9) hex | 125 (14.12) | 0.07 |
| 0.75 (19.1) stud x 1.25 (31.8) hex | 600 (67.79) | 0.052 |

| 120 SERIES - THERMAL JOINT COMPOUND | |
|---|---|
| Characteristic | Description |
| Volume Resistivity | 5 X $10^{14}$ ohm-cm |
| Dielectric Strength | 225 volts/mil |
| Specific Gravity | 2.1 min. |
| Thermal Conductivity @ 36°C | 0.735 W/(m)(K)<br>5.1(Btu) (in.)/(hr)(ft$^2$)(°F) |
| Thermal Resistivity (P) | 56 (°C)(in.)/watt |
| Bleed, % after 24 hrs @ 200°C | 0.5 |
| Evaporation, % after 24 hrs @ 200°C | 0.5 |
| Color | opaque white |
| Shelf life | 5 years |
| Operating Temperature Range (°C) | -40/+200 |

| 120 SERIES - ORDER GUIDE | |
|---|---|
| Series - P/N | Container Size |
| 120-SA | 4 gram plastic pak |
| 120-2 | 2 oz (0.06 kg) jar |
| 120-5 | 5 oz (0.14 kg) tube |
| 120-8 | 8 oz (0.23 kg) jar |
| 120-80 | 5 lb (2.27 kg) can |
| 120-320 | 20 lb (9.08 kg) can |

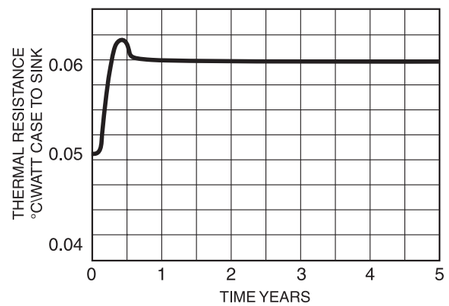


## HIGH PERFORMANCE THERMAL COMPOUND

## 122 SERIES

**122 Series Thermal Joint Compound** is a stable, silicone based, thixotropic paste developed to provide premium performance at an affordable price. It is formulated to significantly reduce contact thermal resistance where power densities are concentrated in devices such as flip chip, reduced die size, and 'overclock' microprocessors. When applied as a thin film between a Wakefield-Vette heat sink and device it possesses superior thermal conductivity compared to traditional 'grease'. It is compatible with automated or manual dispensing methods and is fully RoHS compliant.

| 122 SERIES THERMAL JOINT COMPOUND | |
|---|---|
| Typical Characteristics | Description |
| Appearance | Smooth Gray paste |
| Thermal Conductivity | 2.5 W / m °K,<br>17.3 (Btu) (in.)/(hr) (ft$^2$) (°F) |
| Thermal Resistance | 0.02 °C in 2 / W |
| Bleed | 0.015 wt%, 24 hrs at 200°C |
| Evaporation | 0.150 wt%, 24 hrs at 200°C |
| Volume Resistivity | 1.4 x 1010 ohm-cm |
| Dielectric Strength | 225 volts/mil |
| Specific Gravity | 2.23 (gm/cc) at 25°C |
| Operating Range | -40°C to 205°C |
| Shelf Life | 5 years |

| 122 SERIES - ORDER GUIDE | |
|---|---|
| Series - P/N | Container Size |
| 122-10CC | 10cc syringe |
| 122-2 | 2 oz (0.06 kg) jar |
| 122-30CC | 30cc syringe |





# THERMAL COMPOUNDS, ADHESIVES & INTERFACE MATERIALS

## 126 SERIES

The **126 Series** is a nontoxic, synthetic, ester-based (nonsilicone) Thermal Joint Compound with metal oxide fillers designed to enhance thermal performance characteristics of plastic and metal package devices exceeding that of silicone-based compounds. Solved are problems associated with contamination of wave solder baths and migration of silicone-based products. Shelf life: 5 years.

| 126 SERIES THERMAL JOINT COMPOUND | |
|---|---|
| Characteristics | Description |
| Appearance | Smooth, white homogeneous paste |
| Solids Content, wt % | 65% min |
| Thermal Conductivity at 36°C | .69 W / m $^0$K, 4.8 (Btu)(in.)/(hr) (ft$^2$) (°F) |
| Interface Thermal Resistance | 0.043°C/W TO-3 at 0.0008 thick film |
| Bleed, 24 hrs at 200°C, wt% | 0.09% max |
| Evaporation, 24 hrs at 200°C, wt% | 0.6 max |
| Volume Resistivity | 2.3 x $10^{12}$ ohms-cm |
| Dielectric Strength | 200 volts/mil |
| Specific Gravity @ 60°F | 2.93 (gm/cc) |
| Penetration | 280 to 320 |
| Operating Range | -40°C to 200°C |

| 126 SERIES - ORDER GUIDE | |
|---|---|
| Series - P/N | Container Size |
| 126-2 | 2 oz (0.6 kg) jar |
| 126-4 | 4 oz (0.11 kg) tube |
| 126-4S | 4 oz (0.11 kg) syringe |
| 126-5LB | 5 lb (2.27 kg) can |

## DELTABOND™ 152

**DeltaBond™ 152** adhesive is ideal for general cementing; thermally bonding semiconductors and components to chassis or heat sinks, while electrically isolating one from the other; fabricating heat sinks or thermal links; and for all permanent bonding of assemblies which require high thermally conductive interfaces. It produces a rigid, high strength bond to most materials when cured. **DeltaBond™ 152** is available in bi-packs, kits, and quarts. Order one bottle of hardener A-4 or B-4 per one quart of **DeltaBond™ 152** separately. Shelf life: 152KA 1 year, all others 2 years.

| DELTABOND™ 152 | | |
|---|---|---|
| Characteristics | Hardener Type | |
| Typical Properties Fully Cured | A4 | B4 |
| Thermal conductivity - W/(m) (°K) | 0.836 | 0.908 |
| (Btu) (in.)/(hr) (ft$^2$) (°F) | 5.8 | 6.3 |
| Thermal resistivity - (°C) (in.) watt | 47 | 42 |
| Bond shear strength 77°F | 2,900 | 2,300 |
| 1 in. overlap - psi 125°F | 2,200 | 2,000 |
| etched aluminum to etched aluminum 212°F | 400 | 800 |
| Heat distortion point - °F | 130 | 225 |
| Minimum dielectric strength, v/mil, 0.125 in. sample | 400 | 400 |
| Max operation Continuous temp - °C Intermittent | 65<br>100 | 150<br>190 |

| DELTABOND™152 | | |
|---|---|---|
| Mixing Proportions and Working Properties | | |
| Characteristics | A4 | B4 |
| Parts of hardener per 100 parts of resin by weight | 7.5 | 3.5 |
| *Working Time - at 77°F | 45 min | 30 min |
| †Initial cure time 77°F | 8 hrs | 6 hrs |
| 150°F | 45 min | 30 min |
| 250°F | 20 min | 15 min |
| ‡Post-cure time at a temp in °F | 4 hrs @200°F | 4 hrs @ 200°F |
| ‡Alternate room temp. aging time at 77°F | 4 days | 4 days |
| Working consistency (77°F) | viscous liquid | paste |
| Working viscosity (77°F) cps | 25,000 | — |

*NOTES:*

* Since the hardener/resin reaction is exothermic, it is important that batch |size be matched to hardener speed. Working times given are for approximate batch sizes: A—200 gms, B—200 gms. Larger batch sizes will greatly reduce working time.

** For optimum electrical properties, dry parts for 15 minutes at 150°F (65°C) or 30 minutes at 75°F (24°C) to slowly evaporate the thinner and then final cure for 4 hours at 275°F (135°C).

† After initial cure, material may be handled, removed from fixture, etc., but has not yet achieved full properties and should be room temperature aged or post-cured as shown to achieve full physical and electrical properties.

‡ After initial cure, material may be brought to full physical and electrical properties during post-cure or may be room temperature aged for charted length of time to achieve same full properties.

| DELTABOND™152 | | | |
|---|---|---|---|
| | Ordering Guide - Resin and Hardener | | |
| Model Number | Resin | | Hardener |
| | Part No. | Container | Part Number |
| DeltaBond™ 152 | 152-1A<br>152-1B<br>152-KA<br>152-Q | Bi-Pack (1 oz)<br>Bi-Pack (1 oz)<br>Kit (7 oz Resin, 0.5 oz Hardener)<br>1 quart (4 lbs) | Included in PIN 152-1 A ("A-4") Type<br>Included in P/N 152-1 B ("B-4") Type<br>Included in P/N 152-KA<br>A-4 (0.316 lb), B-4 (0.14 lb), (order 1 only) |
| All hardener part numbers: A-4, B-4 | | | |

The information contained herein is based on data believed to be reliable but we do not assume responsibility for accuracy. All such information is used at the customer's own risk, conditions of use being beyond our control.

# THERMAL COMPOUNDS, ADHESIVES & INTERFACE MATERIALS

## DELTABOND™ 153

**DeltaCast™ 153** is a pourable casting resin having thermal expansion characteristics similar to aluminum and copper allowing assemblies to operate over a very wide temperature range. Ideal for encapsulating components and assemblies, this series' major advantages and uses include potted systems (virtually indestructible), protecting components and systems from moisture and contaminants, securing proprietary circuitry, mechanical support of devices, removal of heat from hot components and the assembly equalizing temperatures, and high voltage isolation. **DeltaCast™ 153** is available in quarts and gallons. Order one bottle of hardener A4 or B4 per one quart of **DeltaCast™ 153** separately. Shelf life: 2 years.

| DELTACAST™153 | | |
|---|---|---|
| Characteristics | Hardener Type | |
| Typical Properties Fully Cured | A4 | B4 |
| Thermal conductivity - W/(m) (°K) | 0.836 | 0.908 |
| (Btu) (in.)/(hr) (ft²) (°F) | 5.8 | 6.3 |
| Thermal resistivity - (°C) (in.) watt | 47 | 42 |
| Bond shear strength 77°F | 2,500 | 1,900 |
| 1 in. overlap - psi 125°F | — | — |
| etched aluminum to etched aluminum 212°F | — | — |
| Heat distortion point - °F | 130 | 225 |
| Minimum dielectric strength, v/mil, 0.125 in. sample | 400 | 400 |
| Max operation temp - °C Continuous | 65 | 150 |
| Intermittent | 100 | 190 |

| DELTACAST™153 | | |
|---|---|---|
| Mixing Proportions and Working Properties | | |
| Characteristics | A4 | B4 |
| Parts of hardener per 100 parts of resin by weight | 7.5 | 3.5 |
| *Working Time - at 77°F | 45 min | 30 min |
| † Initial cure time 77°F | 8 hrs | 6 hrs |
| 150°F | 45 min | 30 min |
| 250°F | 20 min | 15 min |
| ‡Post-cure time at a temp in °F | 4 hrs @200°F | 4 hrs @ 200°F |
| ‡Alternate room temp. aging time at 77°F | 4 days | 4 days |
| Working consistency (77°F) | heavy liquid | viscous liquid |
| Working viscosity (77°F) cps | 10,000 | 30,000 |

| DELTACAST™153 | | | |
|---|---|---|---|
| | Ordering Guide - Resin and Hardener | | |
| Model Number | Resin | | Hardener |
| | Part No. | Container | Part Number |
| DeltaCast™ 153 | 153-Q | 1 quart (4 lbs) | A-4 (0.316 lb), B-4 (0.14 lb), (order 1 only) |
| All hardener part numbers: A-4, B-4 | | | |

## DELTABOND™ 154

**DeltaBond™ 154** is a medium viscosity, aluminum-filled resin with the best thermal conductivity of this series.It is, however, neither a good electrical insulator nor conductor. Its principal application is that of a good thermal mechanical adhesive for applications such as bonding fins to base plates or structural mounting blocks or brackets to heat sinks. Order one bottle of hardener A4 or B4 per one quart of **DeltaBond™ 154** separately. Shelf life: 2 years.

| DELTABOND™ 154 | | |
|---|---|---|
| Mixing Proportions and Working Properties | | |
| Characteristics | A4 | B4 |
| Parts of hardener per 100 parts of resin by weight | 11.0 | 4.5 |
| *Working Time - at 77°F | 45 min | 30 min |
| † Initial cure time 77°F | 8 hrs | 6 hrs |
| 150°F | 45 min | 30 min |
| 250°F | 20 min | 15 min |
| ‡Post-cure time at a temp in °F | 4 hrs @200°F | 4 hrs @ 200°F |
| ‡Alternate room temp. aging time at 77°F | 4 days | 4 days |
| Working consistency (77°F) | viscous liquid | paste |
| Working viscosity (77°F) cps | 25,000 | — |

| DELTABOND™ 154 | | |
|---|---|---|
| Characteristics | Hardener Type | |
| Typical Properties Fully Cured | A4 | B4 |
| Thermal conductivity - W/(m) (°K) | 1.053 | 1.154 |
| (Btu) (in.)/(hr) (ft²) (°F) | 7.3 | 8.0 |
| Thermal resistivity - (°C) (in.) watt | 37 | 34 |
| Bond shear strength 77°F | 3,000 | 2,400 |
| 1 in. overlap - psi 125°F | 2,300 | 2,100 |
| etched aluminum to etched aluminum 212°F | 500 | 800 |
| Heat distortion point - °F | 130 | 225 |
| Minimum dielectric strength, v/mil, 0.125 in. sample | NA* | NA* |
| Max operation temp - °C Continuous | 65 | 150 |
| Intermittent | 100 | 190 |





## DELTABOND™ 154

| DELTABOND™154 | | | |
|---|---|---|---|
| | Ordering Guide - Resin and Hardener | | |
| Model Number | Resin | | Hardener |
| | Part No. | Container | Part Number |
| DeltaBond™ | 154-Q1 | quart (2.5 lbs) | A-4 (0.316 lb), B-4 (0.14 lb), (order 1 only) |
| All hardener part numbers: A-4, B-4 | | | |

## DELTABOND™ 155

**DeltaBond™ 155** is an epoxy adhesive formulated for use within the semiconductor industry. An easy to mix spread thixotropic paste, it offers high heat transfer, low shrinkage, and a coefficient of thermal expansion comparable to that of copper and aluminum. This adhesive is principally used to form thermally conductive joints in fabricated heat sinks and between heat sinks and power devices. When used to bond semiconductors to heat sinks, it also serves as an electrical insulator. Its strong bond to a wide variety of substrates resists severe temperature cycling. **DeltaBond™ 155** is only available in kit size. Simply squeeze out equal lengths and mix to uniform color. Shelf life: 1 year.

| DELTABOND™ 155 | |
|---|---|
| Characteristics | Hardener Type DeltaBond™155 |
| Typical Properties Fully Cured | |
| Thermal conductivity - W/(m) (°K) | 0.836 |
| (Btu) (in.)/(hr) (ft²) (°F) | 5.8 |
| Thermal resistivity - (°C) (in.) watt | 47 |
| Bond shear strength 77°F | 2,600 |
| 1 in. overlap - psi 125°F | — |
| etched aluminum to etched aluminum 212°F | — |
| Heat distortion point - °F | 130 |
| Minimum dielectric strength, v/mil, 0.125 in. sample | 400 |
| Max operation temp - °C Continuous | 65 |
| Intermittent | 100 |

| DELTABOND™ 155 | |
|---|---|
| Mixing Proportions and Working Properties | |
| Parts of hardener per 100 parts of resin | by volume 100 |
| *Working Time - at 77°F | 90 min |
| †Initial cure time 77°F | 8 hrs |
| 150°F | 45 min |
| 250°F | 20 min |
| ‡Post-cure time at a temp in °F | 4 hrs @ 200°F |
| ‡Alternate room temp. aging time at 77°F | 4 days |
| Working consistency (77°F) | paste |
| Working viscosity (77°F) cps | paste |

| DELTABOND™ 155 | | | |
|---|---|---|---|
| Ordering Guide - Resin and Hardener | | | |
| Model Number | Resin | Hardener | |
| | Part No. | Container | Part Number |
| DeltaBond™ 155 | 155 Kit | (3 oz resin, 3 oz hardener) | Included in P/N 155 |

### NOTES:

* Since the hardener/resin reaction is exothermic, it is important that batch size be matched to hardener speed. Working times given are for approximate batch sizes: A—200 gms, B—200 gms. Larger batch sizes will greatly reduce working time.

† After initial cure, material may be handled, removed from fixture, etc., but has not yet achieved full properties and should be room temperature aged or post-cured as shown to achieve full physical and electrical properties.

‡ After initial cure, material may be brought to full physical and electrical properties during post-cure or may be room temperature aged for charted length of time to achieve same full properties.

The information contained herein is based on data believed to be reliable but we do not assume responsibility for accuracy. All such information is used at the customer's own risk, conditions of use being beyond our control.

# THERMAL COMPOUNDS, ADHESIVES & INTERFACE MATERIALS

## DELTABOND™ 156

**DeltaBond™ 156** Thermally Conductive Adhesive is a modified acrylic adhesive designed for permanent mounting on components where heat must be effectively transmitted. Recommended for electromechanical assemblies to bond components and dissipate heat, it replaces mechanical fasteners and compressible pads, silicone grease, and epoxies; eliminates air entrapment, and other variables related to epoxy mixing. This soft paste requires no mixing and flows easily to allow thin bond lines. Primer activated, cure begins upon assembly. DeltaBond™ Activator fixtures at room temperature in less than 5 minutes. Full strength is developed in 4 to 12 hours and fillets become dry to the touch in 24 hours. It is not recommended to use this durable adhesive without the use of DeltaBond™ Activator. **DeltaBond™ 156** is available in kit size; order 156-K (25 ml Syringe and Activator Kit). Shelf life: 1 year.

| DELTABOND™ 156 | | |
|---|---|---|
| Characteristics | | |
| Typical Properties Fully Cured | Description | |
| Test | Results | ASTM |
| Temperature Range | -65 to 300°F<br>(-54 to 149°C)<br>300°F to (177°C)<br>Intermittent | |
| Tensile Strength, at break | 2360 psi | D638 |
| Modulus | 233,000 psi | D638 |
| Elongation, at break | 7.75% | D638 |
| Outgassing | 2.5% TLM<br>0.05% CVCM | E595 |
| Coefficient of Thermal Expansion | $7.1 \times 10^{-4}$ (cm/cm°C) | |
| Tensile Shear | 2500psi | D1002 |
| Thermal Conductivity, K<br>(absolute at 86°F (30°C) | 3.47 Btu x in./hr ft$^2$ °F<br>(0.50 W/m °C) | |

Note: The absolute thermal conductivity test was developed specifically for measuring thermal properties of thin film adhesive bonds.

| DELTABOND™ 156 | | |
|---|---|---|
| Typical Electrical Properties | | |
| Test | Results | ASTM |
| Dielectric Strength | 220 volts/mil | D149 |
| Dielectric Constant, 77°F (25°C) | | D150 |
| 100 Hz | 14.92 | |
| 1000 Hz | 14.26 | |
| 1MM Hz | 12.34 | |
| Dissipaton Factor, 77°F (25°C) | | D150 |
| 100 Hz | 0.05 | |
| 1000 Hz | 0.03 | |
| 1MM Hz | 0.06 | |
| Volume Resistivity | $5.2 \times 10^{11}$ (ohms-cm) | D257 |
| Surface Resistivity | $8.6 \times 10^{13}$ (ohms) | D257 |

Note: DeltaBond™ Thermally Conductive Adhesive-High Strength contains a metallic filler which, in certain applications, may have an effect on electrical properties. Therefore, test each particular application to ensure that electrical properties are as required.

| DELTABOND™ 156 | | | |
|---|---|---|---|
| Model Number | Ordering Guide - Resin and Hardener | | |
| | Resin | | Hardener |
| | Part No. | Container | Part Number |
| DeltaBond™ 156 | 156-K | Resin Kit Hardener Syringe - 0.85 fl oz - 25 ml - 2 oz net/0.44 oz fl contents bottle -12ml | Included in kit hardener with brush applicator - 4.2 oz total wt/kt |

### NOTES:

* Since the hardener/resin reaction is exothermic, it is important that batch size be matched to hardener speed. Working times given are for approximate batch sizes: A—200 gms, B—200 gms. Larger batch sizes will greatly reduce working time.

† After initial cure, material may be handled, removed from fixture, etc., but has not yet achieved full properties and should be room temperature aged or post-cured as shown to achieve full physical and electrical properties.

‡ After initial cure, material may be brought to full physical and electrical properties during post-cure or may be room temperature aged for charted length of time to achieve same full properties.

The information contained herein is based on data believed to be reliable but we do not assume responsibility for accuracy. All such information is used at the customer's own risk, conditions of use being beyond our control.





TO-3, TO-66, TO-220,DO-4, DO-5 SHEET

## DELTAPADS™ THERMALLY CONDUCTIVE INSULATORS 173 & 174 SERIES

## GREASELESS THERMALLY CONDUCTIVE KAPTON® REINFORCED INSULATORS 175 SERIES

The **173, 174, and 175 Series** are highly efficient thermally conductive insulators designed for semiconductor interface to heat sinks. Their properties eliminate messy concerns associated with thermal greases.

| Characteristics | DeltaPads™ 173-7 Series | DeltaPads™ 173-9 Series | DeltaPads™ 174-9 Series | Kapton® 175-6 Series | Test Method |
|---|---|---|---|---|---|
| Material Thickness | 0.007 in. | 0.009 in. | 0.009 in. | 0.006 in. | Micrometer |
| Color | Gray | Gray | Tan | Gray | Visual |
| Tear Strength, lb/in. Typical100 | 100 | 100 | 100 | ASTM 0624 | |
| Volume Resistivity, megohm-cm, Minimum Normal | $1.0 \times 10^9$ | $1.0 \times 10^9$ | $1.0 \times 10^{13}$ | $1 \times 10^{13}$ | ASTM D257 |
| Breakdown Voltage, Minimum | 4,000 | 5,000 | 5,000 | 6,000 | ASTM 0149 |
| Dielectric Constant at 60 Hz and 100 V Maximum | 2.70 | 2.40 | 2.50 | 5.5 @ 1,000 Hz | ASTM D 150 |
| Continuous Use Temperature, °C | -60/+200 | -60/+200 | -60/+200 | -60/+200 | – |
| Thermal Conductivity, cal/cm sec. °C, Minimum | $3 \times 10^{-3}$ | $3 \times 10^{-3}$ | $1 \times 10^{-2}$ | $1.2 \times 10^{-3}$ | – |
| Thermal Resistance (TO-3), 1 in.$^2$ °C/W | 0.33 | 0.50 | 0.25 | 0.40 | – |
| Recommended Mounting Pressure, lb/in.$^2$ | 350/550 | 350/550 | 350/550 | 350/550 | Formula* |

$$*P \text{ (pressure in psi)} = \frac{T \text{ (torque [in.- lb] x N (number of fasteners)}}{0.2 \times D \text{ (Thread Dia) x A (contact surface area square inches)}}$$

| 173-7 Series | | 173-9 Series | 174-9 Series | 175-6 Series |
|---|---|---|---|---|
| No Adhesive | Adhesive Backing | No Adhesive | No Adhesive | Greaseless |
| – | – | 173-9-210P | – | 175-6-210P |
| 173-7-220P | – | – | – | 175-6-220P |
| 173-7-230P | – | 173-9-230P | – | 175-6-230P |
| 173-7-240P | 173-7-240A | 173-9-240P | – | 175-6-240P |
| – | – | – | – | 175-6-250P |
| – | – | – | – | 175-6-280P |
| – | – | – | 174-9-310P | 175-6-310P |
| – | – | – | – | 175-6-320P |
| – | – | – | – | 175-6-330P |
| – | – | – | – | 175-6-410P |
| – | – | – | – | 175-6-610P |
| 173-7-1212P | – | 173-9-1212P | 174-9-1212P | – |

### MECHANICAL DIMENSIONS

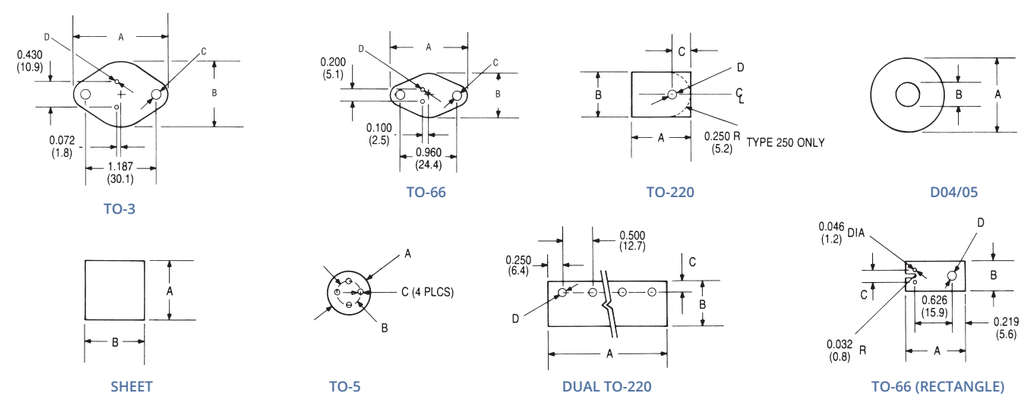


**Dimensions: in. (mm)**

# GENERAL & THERMAL HIGH PERFORMANCE EPOXY

## BONDATHERM™

BondaTherm™

RoHS

### KEY FEATURES OF THE BONDATHERM EQUALIZER KITS:

- Eliminates improper ratios and mixing errors
- Reduces material waste
- Eliminates employee contact with resins
- Eliminates messy hand mixing and transferring
- Increases productivity
- Resins are protected from moisture contamination

| Wakefield-Vette Part Number | Description | Packaging |
|---|---|---|
| BT-101-50M<br>BT-102-50M<br>BT-301-50M<br>BT-301-200M | Non-Sag 5 Minute BondaTherm Epoxy Adhesive<br>Toughened, Flexible Adhesive System<br>Fast Curing Thermally Conductive Adhesive<br>Fast Curing Thermally Conductive Adhesive | 50ml Dual Catridges<br>50ml Dual Catridges<br>50ml Dual Catridges<br>200ml Dual Catridges |
| BT-01-50M<br>BT-01-200M<br>BT-02-50M<br>BT-02-200M | BondaTherm Equalizer Dispense Gun (50ml)<br>BondaTherm Equalizer Dispense Gun (200ml)<br>BondaTherm Equalizer Static Mixer (50ml)<br>BondaTherm Equalizer Static Mixer (200ml) | -<br>-<br>-<br>- |
| BT-101-50M-EQZ<br>BT-102-50M-EQZ<br>BT-301-50M-EQZ<br>BT-301-200M-EQZ | Two Dual Cartridges (BT-101-50M), One Gun (BT-01-50M), Three Mixers (BT-02-50M)<br>Two Dual Cartridges (BT-102-50M), One Gun (BT-01-50M), Three Mixers (BT-02-50M)<br>Two Dual Cartridges (BT-301-50M), One Gun (BT-01-50M), Three Mixers (BT-02-50M)<br>Two Dual Cartridges (BT-301-200M), One Gun (BT-01-200M), Three Mixers (BT-02-200M) | Kit<br>Kit<br>Kit<br>Kit |
| BT-103-50M<br>BT-302-50M | 5 Minute Clear Bondatherm Epoxy Adhesive<br>Fast Curing Aluminum Filled Bondatherm Epoxy Adhesive | 50ml Dual Catridges<br>50ml Dual Catridges |
| BT-401-H<br>BT-402-H<br>BT-403-H | Silver Filled Bondatherm 2 gram Epoxy Hinge Packs<br>Thermally Conductive Epoxy Potting UL Listed 100 gram Bondatherm Hinge Pack<br>Aluminum Filled Bondatherm Epoxy Adhesive for Heat Sinks 100 gram Hinge Pack | 2 gram hinge pack<br>100 gram hinge pack<br>100 gram hinge pack |

## BONDATHERM™ CARTRIDGES BT-101-50M

These high bond strength adhesives are clear 100% solids, two component, non-sag adhesives with a quick setting time of 5–46 minutes at room temperature. They are excellent for bonding plated metals, pewter, glass, wood, ceramic, felt, cement, gem stones, most plastics and rubbers. These adhesives were tested in our laboratory for flame retardancy properties. According to our test results they meet the requirements of UL94HB.

**APPLICATIONS:**

These unique adhesives are ideally suited for a wide range of electronic, electrical, industrial, structural, and jewelry applications. These adhesives are also an excellent choice for field repairs. They are offered in the popular BondaTherm Equalizer Kit dual barrel cartridge dispensing system and bulk packaging.





## BONDATHERM™ CARTRIDGES BT-101-50M

### FEATURES

- Non-sag consistency
- High bond strength
- Fast room temperature cure – three speeds to choose from
- Water & chemical resistance
- Outstanding thermal shock resistance
- 1:1 mix ratio
- Impact resistance

| Specifications | |
|---|---|
| Color<br>Mix ratio by volume<br>Mixed viscosity, 25°C cps*<br>Solids content, %<br>Specific gravity, 25°C | Semi-transparent (available in black)<br>1:01<br>Non-Sag<br>100<br>1.15 |
| Shore D hardness<br>10-3005NS<br>10-3020NS<br>10-3046NS | <br>86<br>72<br>65 |
| Work Life, 25°C, minutes<br>10-3005NS<br>10-3020NS<br>10-3046NS | <br>3-5<br>10-15<br>25-30 |
| Handling time, 25°C, minutes<br>10-3005NS<br>10-3020NS<br>10-3046NS | <br>15-20<br>30-35<br>55-60 |
| Cure time, 25°C, hours | 24-48 |
| Coefficient of thermal expansion (in/in/°C) | $60x10^{-6}$ |
| Operating temperature range, °C<br>Dielectric strength,V/mil<br>Izod Impact ft-lb/in<br>Dielectric constant, 1KHz at 25°C<br>Dissipation factor, 1KHz at 25°C<br>Volume resistivity, ohm-cm at 25°C | -50 to +130<br>420<br>2.7<br>4<br>0.017<br>$2.0 \times 10^{14}$ |
| Shear strength, psi<br>Aluminum (etched)<br>Cold rolled steel<br>Copper<br>Brass<br>Stainless Steel<br>Galvanized Steel<br>ABS<br>PVC | <br>1,500<br>1,000<br>960<br>725<br>750<br>900<br>500<br>335 |
| Polycarbonate<br>Compression strength, psi | 250<br>8,500 |
| **Adhesive coverage:** a .005-inch bond line will yield approximately 320 sq. ft./gallon | |

**INSTRUCTIONS FOR USE:**

1. Thoroughly mix equal parts of resin to catalyst by weight or volume.
2. Apply evenly to both surface(s) to be bonded.
3. Application to the substrates should be made within five minutes. Larger quantities and/or higher temperatures will reduce the working time. Avoid mixing large quantities and/or at high temperature due to the possibility of creating a high exothermic temperature.
4. Join the coated surfaces. Allow to cure at 60°F (16°C) or higher until adhesive is set. Heat may be added up to 200°F (93°C) to accelerate the cure.
5. Avoid moving parts during cure. Pressure to the substrates is recommended. Maximum shear strength is obtained with a 3-5 mil bond line.

wakefield-vette

# GENERAL & THERMAL HIGH PERFORMANCE EPOXY

## BT-102-50M BONDATHERM™ CARTRIDGES

A two component system that forms strong structural bonds at room temperature. This unique adhesive system provides high peel and shear strengths. This is excellent for bonding many metals and woods, most plastics and rubbers and masonry products.

**BT-102-50M** is a toughened, flexible, and impact resistant epoxy adhesive. **BT-102-50M** is a two component system that forms strong structural bonds at room temperature. This unique adhesive system provides high peel and shear strengths. **BT-102-50M** is excellent for bonding many metals and woods, most plastics and rubbers and masonry products. This system is designed for electronic, aerospace and other demanding industrial applications. This product is available in the popular BondaTherm Equalizer dual barrel cartridge system.

### FEATURES

- Impact resistant
- Excellent electrical insulator
- High peel and shear
- Outstanding structural bonds
- Convenient 1:1 Ratio
- Retention of strength after environmental aging

| Typical Specifications | |
|---|---|
| Mixed viscosity, 25°C, cps | 150,000 |
| Specific gravity, 25°C,<br>Resin<br>Catalyst | <br>1.32<br>1.2 |
| Gel time, 100 grams, 25°C<br>Tensile shear strength, psi<br>Durometer, shore D<br>Dielectric strength, V/mil<br>Dielectric constant, 60 Hz<br>Dissipation factor, 60 Hz<br>Volume resistivity, ohm-cm<br>Thermal conductivity, btu·in/hr·ft²·°F<br>Coefficient of thermal expansion, per °C | 70 minutes<br>2,600<br>70<br>410<br>4.4<br>0.02<br>$1.1 \times 10^{15}$<br>4<br>$10 \times 10^{-5}$ |
| **Adhesive coverage:** a .005-inch bond line will yield approximately 320 sq. ft./gallon | |

### INSTRUCTIONS FOR USE:

1. Surfaces must be clean and grease free. Use an oil free solvent such as acetone to wipe surfaces. Adhesion can be substantially increased by abrading the surfaces to be bonded with emery cloth, sand paper, carbide grinding tools, and sand blasting. A roughened, porous surface will produce the best results. Any oxidized metal films should be removed just prior to application of the epoxy adhesive mixture.
2. Thoroughly mix equal parts of resin and catalyst by volume.
3. Apply mixed product evenly to both surfaces.
4. Join the adhesive coated surfaces within 60 minutes of mixing resin and catalyst.
5. Cure according to one of the following schedules:

| | |
|---|---|
| 77°F | 24-48 hours |
| 150°F | 2 hours |
| 180°F | 1 hour |
| 200°F | 30 minutes |

### STORAGE, HANDLING, AND AVAILABILITY:

- Store in a cool, dry place in original containers.
- Keep containers closed and stir well before using.



wakefield-vette

THERMAL
INTERFACE PRODUCTS

## BONDATHERM™ CARTRIDGES BT-301-50M & BT-301-200M

The **BT-301-50M** and **BT-301-200M** have simple 1:1 mix ratios and develop a 1,400 psi Lap Shear strength (aluminum to aluminum) in four hours at room temperature. After just twenty four hours the strength is over 2,200 psi. This is perfect for any thermally conductive applications. Both cartridges are a two component fast curing thermally conductive epoxy adhesive.

These products are specifically formulated for use in the convenient BondaTherm Equalizer dual barrel cartridge system. The **BT-301-50M** and **BT-301-200M** offer fast heat dissipation for a wide range of electronic applications. The black resin and white hardener provide an excellent visual indication of a complete mix.

### FEATURES

- Fast room temperature cure
- Thermally conductive
- Forms strong bonds to a variety of substrates
- Electrically insulating
- Vibration and impact resistant

| Typical Properties | |
|---|---|
| Color<br>Resin<br>Hardener<br>Mixed | <br>Black<br>White<br>Dark Gray |
| Viscosity, @25°C, cps<br>Resin<br>Hardener | <br>70,000<br>70,000 |
| Specific Gravity, @25°C<br>Resin<br>Hardener | <br>1.5<br>1.5 |
| Gel Time, 25°C, 15 grams | 15 minutes |
| Durometer, Shore D<br>@25°C<br>@70°C | <br>80<br>50 |
| Lapshear Strength (Al to Al), psi<br>After 4 hours<br>After 24 hours | <br>1,413<br>2,231 |
| Thermal Conductivity, W/m - °K<br>Dielectric Strength, V/mil<br>Dielectric Constant, 25°C, 100Hz<br>Volume Resistivity, ohm-cm, 25°C | 1.04<br>440<br>5.3<br>$2.4 \times 10^{12}$ |
| Coefficient of Thermal Expansion, ppm/°C<br>Below Tg<br>Above Tg | <br>45<br>175 |
| Operating Temperature, °C | -40 to +120 |

### INSTRUCTIONS FOR USE:

1. Surfaces must be clean and grease free. Use an oil free solvent such as acetone to wipe surfaces. Adhesion can be substantially increased by abrading the surfaces to be bonded with emery cloth, sand paper, carbide grinding tools, and sand blasting. A roughened, porous surface will produce the best results. Any oxidized metal films should be removed just prior to application of the epoxy adhesive mixture.
2. Dispense material from BondaTherm Equalizer. Apply mixed product to substrate to be bonded.
3. Join substrates within 3-5 minutes.
4. Cure according to one of the following schedules:
5. 25°C 2-4 hours
   65°C < 10 minutes

### STORAGE, HANDLING AND AVAILABILITY:

- Store in a cool, dry place in original containers.
- Please read and understand the Safety Data Sheet (SDS) before using this product.

### *NOTES:*

1. At room temperature, the BT-301-50M and BT-301-200M will reach handle cure within 1-2 hours. The lap shear strength is 1,413 psi after 4 hours.
2. This product is an adhesive and is not designed for potting and encapsulating applications. The BT-301-50M and BT-301-200M are fast reacting epoxy systems and they will create a high exothermic temperature in large mass sizes (avoid mass sizes greater than 25 grams).

# GENERAL & THERMAL HIGH PERFORMANCE EPOXY

## BT-103-50M BONDATHERM™ CARTRIDGES

These high bond strength adhesives are clear 100% solids, two component, low viscosity adhesives with a quick setting time of 5-46 minutes at room temperature. They are excellent for bonding plated metals, pewter, glass, wood, ceramic, felt, cement, gem stones, most plastics, and rubbers. These adhesives were tested in our laboratory for flame retardancy properties. According to our test results they meet the requirements of UL94HB.

These unique adhesives are ideally suited for a wide range of electronic, electrical, industrial, structural, and jewelry applications. These adhesives are also an excellent choice for field repairs. They are offered in the popular TriggerBond® dual barrel cartridge dispensing system and bulk packaging.

### FEATURES

- High bond strength
- Outstanding thermal shock resistance
- Water and chemical resistance
- Impact resistance
- 1:1 mix ratio
- Fast room temperature cure – three speeds to choose from

**INSTRUCTIONS FOR USE:**

1. Thoroughly mix equal parts of resin to catalyst by weight or volume.
2. Apply evenly to both surface(s) to be bonded.
3. Application to the substrates should be made within five minutes. Larger quantities and/or higher temperatures will reduce the working time.
4. Avoid mixing large quantities and/or at high temperature due to the possibility of creating a high exothermic temperature.
5. Join the coated surfaces. Allow to cure at 60°F (16°C) or higher until adhesive is set. Heat may be added up to 200°F (93°C) to accelerate the cure.
6. Avoid moving parts during cure. Pressure to the substrates is recommended. Maximum shear strength is obtained with a 3-5 mil bond line.

| Typical Specifications (10-3005) | |
|---|---|
| Color | Clear (available in black) |
| Mix ratio by volume | 1:01 |
| Mixed viscosity, 25°C cps * Solids | 12,000 |
| Content, % | 100 |
| Specific gravity, 25°C Shore D hardness | 1.15 |
| 10-3005 | 86 |
| 10-3020 | 72 |
| 10-3046 | 65 |
| Work Life, 25°C, minutes | |
| 10-3005 | 3-5 |
| 10-3020 | 10-15 |
| 10-3046 | 25-30 |
| Handling time, 25°C, minutes | |
| 10-3005 | 15-20 |
| 10-3020 | 30-35 |
| 10-3046 | 55-60 |
| Cure time, 25°C, hours | 24-48 |
| Coefficient of thermal expansion (in/in/°C) | $60x10^{-6}$ |
| Operating temperature range, °C Dielectric strength | -50 to +130 |
| V/mil | 420 |
| Izod Impact, ft-lb/in. | 2.7 |
| Dielectric constant, 1KHz at 25°C | 4.00 |
| Dissipation factor, 1KHZ at 25°C Volume resistivity, | .017 |
| ohm-cm at 25°C Shear strength, psi | $2.0 \times 10^{14}$ |
| Aluminum (etched) Cold rolled | 1,500 |
| Steel Copper | 1,000 |
| Brass | 960 |
| Stainless Steel | 725 |
| Galvanized Steel | 750 |
| ABS | 900 |
| PVC | 500 |
| Polycarbonate | 335 |
| Compression strength, psi | 250 |
| **Adhesive coverage:** a .005-inch bond line will yield approximately 320 sq. ft./gallon | |





# BONDATHERM HARDWARE

| Wakefield-Vette Part Number | Description |
|---|---|
| BT-01-50M | BondaTherm Equalizer Dispense Gun (50ml) |
| BT-01-200M | BondaTherm Equalizer Dispense Gun (200ml) |
| BT-02-50M | BondaTherm Equalizer Static Mixer (50ml) |
| BT-02-200M | BondaTherm Equalizer Static Mixer (200ml) |

## BONDATHERM EQUALIZER GUN

**BT-01-50M** BONDATHERM™ CARTRIDGES

FOR USE W/ 200ML CARTRIDGES **BT-01-200M**

## BONDATHERM EQUALIZER STATIC MIXERS

**BT-02-50M** FOR USE W/ 50ML CARTRIDGES

FOR USE W/ 200ML CARTRIDGES **BT-01-200M**

# GENERAL & THERMAL HIGH PERFORMANCE EPOXY

## BONDATHERM EQUALIZER KIT™

| Wakefield-Vette Part Number | Description | Packaging |
|---|---|---|
| BT-101-50M-EQZ | Two Dual Cartridges (BT-101-50M), One Gun (BT-01-50M), Three Mixers (BT-02-50M) | Kit |
| BT-102-50M-EQZ | Two Dual Cartridges (BT-102-50M), One Gun (BT-01-50M), Three Mixers (BT-02-50M) | Kit |
| BT-301-50M-EQZ | Two Dual Cartridges (BT-301-50M), One Gun (BT-01-50M), Three Mixers (BT-02-50M) | Kit |
| BT-301-200M-EQZ | Two Dual Cartridges (BT-301-200M), One Gun (BT-01-200M), Three Mixers (BT-02-200M) | Kit |

### (2) Dual Cartridges, (1) Dispense Gun, (3) Static Mixers

## BONDATHERM HINGE PACKS BT-401-H

**BT-401-H** is a two component epoxy adhesive filled with silver. This electrically conductive epoxy resin formulation offers continuity of conductivity with an electrical resistivity value of less than $1x10^{-4}$ ohm-cm. 40-3900 is also well known for its wide operating temperature range, -50 to + 170°C.

**BT-401-H** is specifically designed for adhesive bonding in microelectronic and optoelectronic applications. Due to its excellent continuity, it has also been used extensively in applications such as micro-wave EMI and RFI shielding, in the assembly or repair of printed circuit boards, wave guides, electronic modules, flat cable, high frequency shields, connectors, circuitry, and as a cold solder. **BT-401-H** is formulated with pure silver (no alloys) and is designed in a convenient 1:1 mix ratio. Both the resin and hardener have silver powder dispersed.

### FEATURES

- Electrically conductive
- Thermally conductive
- Room temperature cure
- Easy 1:1 mix ratio
- Good bond strength

### STORAGE, HANDLING, AND AVAILABILITY:

- BT-401-H Resin and hardener should be stored at 25°C in original tightly sealed containers. Expected shelf life is twelve months in original unopened containers.
- Filler settling is common with these products. Gently stir resin and hardener before using to make sure fillers are evenly dispersed.

| Typical Specifications | |
|---|---|
| Mix Ratio, by Weight | 1:1 |
| Color | Silver |
| Mixed Viscosity | Creamy Paste |
| Pot Life, 100 gram mass @ 25°C | 1 Hour |
| Specific Gravity, 25°C | |
| Resin | 2.98 |
| Hardener | 1.8 |
| Hardness, Shore D | 70 |
| Thermal Conductivity, W/m- °K | 7.93 |
| Tensile Lapshear, psi (Al to Al) | 700 |
| Flexural Strength, psi | 10,200 |
| Volume Resistivity, ohm-cm | 0.0001 |
| Operating Temp. Range, °C | -50 to +170 |
| Cure Schedule | a) 24 hours @ 25°C<br>b) 1 hour @ 65°C<br>c) 15 minutes @ 90°C |

# GENERAL & THERMAL HIGH PERFORMANCE EPOXY

## BT-402-H

BONDATHERM HINGE PACKS

This system has been formulated to meet the stringent non-burning requirements of UL94 V-0. **BT-402-H** Black Epoxy is used with Catalyst 190 and are listed with Underwriter's Laboratory for passing UL94 V-0. This system offers excellent heat transfer, low shrinkage, and outstanding insulation properties. **BT-402-H** Black with Catalyst 190 passes NASA's outgassing requirements per ASTM E595-07. Other Catalyst's are available as well (30, 150.).

Typical applications for **BT-402-H** include encapsulating power supplies, transformers, coils, insulators, and sensors. This system is an excellent choice for applications requiring high thermal conductivity and flame retardancy.

| Typical Specifications | |
|---|---|
| Viscosity @ 25°C cps, Resin | 60,000 |
| Mixed with Cat. 190 | 28,000 |
| Mixed with Cat. 30 | 17,000 |
| Mixed with Cat. 150 | 1,500 |
| Specific Gravity, 25°C | 1.6 |
| Hardness, Shore D Color | 90 |
| Tensile Strength, psi | Black |
| Linear Shrinkage, in/in | 9,850 |
| Operating Temp. Range,°C | 0.002 |
| Dielectric Strength, V/mil Dielectric | -60 to +200 |
| Constant at 60 Hz | 485 |
| Volume Resistivity, ohm-cm, 25°C | 5.6 |
| Dissipation Factor, 60 Hz | $1.5 \times 10^{15}$ |
| Thermal Conductivity, W/m- °K | 0.015 |
| Compressive Strength, psi | 2.16 |
| Coefficient of Expansion, in/in °F | 15,000 |
| Heat Distortion, °C Outgassing | $1.4 \times 10^{-5}$ |
| (with Cat. 190) | 155 |
| %TML | 0.5 |
| %CVCM | 0.01 |

**INSTRUCTIONS FOR USE:**

A. With Catalyst 190 listed with UL 94 V-0 (room temperature curing):
   1. By weight, thoroughly mix 5 parts Catalyst 190 to 100 parts BT-402-H resin.
   2. Degas and pour. Cure at room temperature for 12-24 hours at 25°C ambient.

B. With Catalyst 30 listed with UL 94 V-0 and RTI Rating of 130°C (Heat curing - Recommended for higher operating temperature and physical property applications):
   1. By weight, thoroughly mix 10 parts Catalyst 30 to 100 parts BT-402-H resin.
   2. Pour and cure according to one of the following recommended cure schedules:
      a) 85°C (185°F) 3-4 hours
      b) 100°C (212°F) 2-3 hours

      For optimum performance, an additional 2 hours @ 365°F (185°C) is recommended.

C. With Catalyst 150 (room temperature/heat curing):
   1. By weight, thoroughly mix 17 parts Catalyst 150 to 100 parts BT-402-H resin.
   2. Degas and pour. Cure at room temperature for 24 hours or for 2-3 hours at 35-40°C.





BONDATHERM HINGE PACKS

## BT-403-H

**BT-403-H** is a two component, aluminum filled epoxy system. This system is used for making heat resistant tools, parts, or bonds that require the highest thermal conductivity and heat resistance. We have developed this extremely conductive epoxy by formulating it with a unique combination of fillers, particle sizes and dispersion techniques.

**BT-403-H** has good heat dissipation making this a popular choice for a variety of heat sink applications. Its viscosity is particularly suited for Fin bonding. **BT-403-H** passes NASA's outgassing requirements per ASTM E-595-07.

### FEATURES

- Excellent Thermal Conductivity
- Superior Adhesion
- Low Viscosity allows quick self leveling

| Typical Specifications | |
|---|---|
| Color | Grey |
| Viscosity, 25°C, | |
| Resin | 130,000 |
| Mixed | 8,000 |
| Specific Gravity, 25°C | 1.81 |
| Working time, 100 grams, 25°C | 5 Hours |
| Durometer, Shore D | |
| 25°C | 90 |
| 100°C | 65 |
| Tensile Strength, psi, 25°C Aluminum | 9,000 |
| to Aluminum | |
| 1" overlap | 2,500 |
| Compressive Strength, PSI, 25°C Mix | 18,500 |
| Ratio, by weight | 100:10 |
| Operating temperature, °C | -55 to 155 |
| Coefficent of Thermal Expansion, °C | $28 \times 10^{-6}$ |
| Thermal Conductivity, W/m- °K | 4.5 |
| Outgassing | |
| % TML | 0.91 |
| % CVCM | 0.07 |

**STORAGE, HANDLING, AND AVAILABILITY:**

- BT-401-H Resin and hardener should be stored at 25°C in original tightly sealed containers. Expected shelf life is twelve months in original unopened containers.
- Filler settling is common with these products. Gently stir resin and hardener before using to make sure fillers are evenly dispersed.