ELLIPTICAL FIN HEAT SINK

900 Series

Wakefield-Vette's 900 Series Heat Sinks for Chipset can match up to devices from Intel, Broadcom, Xilinx, TI, Motorola, ATI, AMD, Nvidia, Vishay, Powerex, Infineon, Microsemi, and many more.

These heat sinks are designed for air flow applications in the Telecom, Data Center, Networking, Cloud Computing, and many more Industries.



Material: AL 6063

Finish: Black Anodize

RoHS

				FORCED CONVECTION							FORCED CONVECTION		
SERIES	Height	CHIP SIZE	NATURAL CONVECTION	200 LFM	400 LFM	600 LFM	SERIES	HEIGHT	CHIP SIZE	NATURAL CONVECTION	200 LFM	400 LFM	600 LFM
901	12	19mm	14.77 C/W	6.63 C/W	5.09 C/W	4.38 C/W	906	12	31mm	12.02 C/W	3.37 C/W	2.25 C/W	1.87 C/W
	15	19mm	14 C/W	6.12 C/W	4.63 C/W	3.95 C/W		15	31mm	11.43 C/W	3.13 C/W	2.02 C/W	1.66 C/W
	18	19mm	13.23 C/W	5.67 C/W	4.17 C/W	3.58 /CW		18	31mm	10.85 C/W	2.85 C/W	1.79 C/W	1.45 C/W
	21	19mm	12.46 C/W	5.28 C/W	3.87 C/W	3.24 C/W		21	31mm	10.27 C/W	2.63 C/W	1.63 C/W	1.31 C/W
	23	19mm	11.98 C/W	4.89 C/W	3.58 C/W	3.06 C/W		23	31mm	9.88 C/W	2.44 C/W	1.5 C/W	1.19 C/W
	28	19mm	11.5 C/W	4.38 C/W	3.26 C/W	2.80 C/W		28	31mm	8.93 C/W	2.21 C/W	1.36 C/W	1.05 C/W
	33	19mm	9.57 C/W	4.04 C/W	2.98 C/W	2.62 C/W		33	31mm	7.98 C/W	2.02 C/W	1.19 C/W	.93 C/W
902	12	21mm	14.31 C/W	5.81 C/W	3.86 C/W	3.16 C/W	907	12	33mm	11.56 C/W	3.23 C/W	2.09 C/W	1.73 C/W
	15	21mm	13.57 C/W	5.3 C/W	3.5 C/W	2.89 C/W		15	33mm	11 C/W	2.97 C/W	1.88 C/W	1.54 C/W
	18	21mm	12.83 C/W	4.95 C/W	3.35 C/W	2.66 C/W		18	33mm	10.45 C/W	2.69 C/W	1.7 C/W	1.37 C/W
	21	21mm	12.09 C/W	4.61 C/W	3.111 C/W	2.47 C/W		21	33mm	9.9 C/W	2.5 C/W	1.52 C/W	1.22 C/W
	23	21mm	11.63 C/W	4.32 C/W	2.91 C/W	2.32 C/W		23	33mm	9.54 C/W	2.3 C/W	1.37 C/W	1.08 C/W
	28	21mm	10.47 C/W	3.89 C/W	2.61 C/W	2.09 C/W		28	33mm	8.62 C/W	2.08 C/W	1.23 C/W	.98 C/W
	33	21mm	9.3 C/W	3.57 C/W	2.37 C/W	1.95 C/W		33	33mm	7.71 C/W	1.89 C/W	1.08 C/W	.86 C/W
903	12	23mm	13.85 C/W	4.75 C/W	3.31 C/W	2.79 C/W	908	12	35mm	11.1 C/W	3.07 C/W	2.07 C/W	1.64 C/W
	15	23mm	13.14 C/W	4.38 C/W	3.05 C/W	2.53 C/W		15	35mm	10.58 C/W	2.79 C/W	1.87 C/W	1.46 C/W
	18	23mm	12.44 C/W	4.07 C/W	2.81 C/W	2.32 C/W		18	35mm	10.06 C/W	2.54 C/W	1.69 C/W	1.27 C/W
	21	23mm	11.73 C/W	3.84 C/W	2.57 C/W	2.11 C/W		21	35mm	9.53 C/W	2.35 C/W	1.52 C/W	1.15 C/W
	23	23mm	11.28 C/W	3.59 C/W	2.4 C/W	1.97 C/W		23	35mm	8.75 C/W	2.13 C/W	1.35 C/W	1.01 C/W
	28	23mm	10.16 C/W	3.22 C/W	2.17 C/W	1.8 C/W		28	35mm	7.93 C/W	1.94 C/W	1.19 C/W	.86 C/W
	33	23mm	9.04 C/W	2.93 C/W	1.95 C/W	1.64 C/W		33	35mm	7.11 C/W	1.69 C/W	1.02 C/W	.72 C/W
904	12	27mm	12.93 C/W	4.34 C/W	3 C/W	2.53 C/W	909	12	37.5mm	10.52 C/W	3.11 C/W	2.01 C/W	1.61 C/W
	15	27mm	12.29 C/W	4.05 C/W	2.76 C/W	2.29 C/W		15	37.5mm	10.04 C/W	2.82 C/W	1.79 C/W	1.41 C/W
	18	27mm	11.64 C/W	3.73 C/W	2.5 C/W	2.07 C/W		18	37.5mm	9.56 C/W	2.59 C/W	1.59 C/W	1.22 C/W
	21	27mm	11 C/W	3.43 C/W	2.31 C/W	1.9 C/W		21	37.5mm	9.08 C/W	2.38 C/W	1.41 C/W	1.06 C/W
	23	27mm	10.58 C/W	3.21 C/W	2.11 C/W	1.71 C/W		23	37.5mm	8.75 C/W	2.15 /CW	1.24 C/W	.94 C/W
	28	27mm	9.54 C/W	2.89 C/W	1.84 C/W	1.51 C/W		28	37.5mm	7.93 C/W	1.88 C/W	1.08 C/W	.8 C/W
	33	27mm	8.51 C/W	2.62 C/W	1.66 C/W	1.35 C/W		33	37.5mm	7.11 C/W	1.64 C/W	.93 C/W	.68 C/W
905	12	29mm	12.47 C/W	4.09 C/W	2.74 C/W	2.25 C/W	910	12	40mm	9.95 C/W	3.09 C/W	1.93 C/W	1.56 C/W
	15	29mm	11.86 C/W	3.81 C/W	2.52 C/W	2.02 C/W		15	40mm	9.51 C/W	2.77 C/W	1.73 C/W	1.37 C/W
	18	29mm	11.25 C/W	3.56 C/W	2.31 C/W	1.84 C/W		18	40mm	9.06 C/W	2.74 C/W	1.52 C/W	1.17 C/W
	21	29mm	10.63 C/W	3.3 C/W	2.12 C/W	1.65 C/W		21	40mm	8.62 C/W	2.22 C/W	1.35 C/W	.99 C/W
	23	29mm	10.23 C/W	3.06 C/W	1.91 C/W	1.49 C/W		23	40mm	8.3 C/W	2.01C/W	1.19 C/W	.87 C/W
	28	29mm	9.24 C/W	2.72 C/W	1.69 C/W	1.33 C/W		28	40mm	7.55 C/W	1.8 C/W	1.04 C/W	.75 C/W
	33	29mm	8.24 C/W	2.47 C/W	1.49 C/W	1.18 C/W		33	40mm	6.78 C/W	1.61 C/W	.88 C/W	.64 C/W

Series	Chip Size	Construction	Height	Chip Height	Finish	Interface
901-	19-	1-	12-	1-	B-	1
XXX	XX	X	XX	X	X	X
901	19	1= Eliptical Fin	12 = 11.6	1 = .9-2.1	B = BLK ANO	0 = None
902	21	2= Pin Fin	15 = 14.6	2 = 2.2-3.4		1 = T725
903	23		18 = 17.6			
904	27		21 = 20.6			
905	29		23 = 22.6			
906	31		28 = 27.6			
907	33		33 = 32.6			
908	35					
909	37.5					
910	40					

ELLIPTICAL FIN HEAT SINK

900 Series

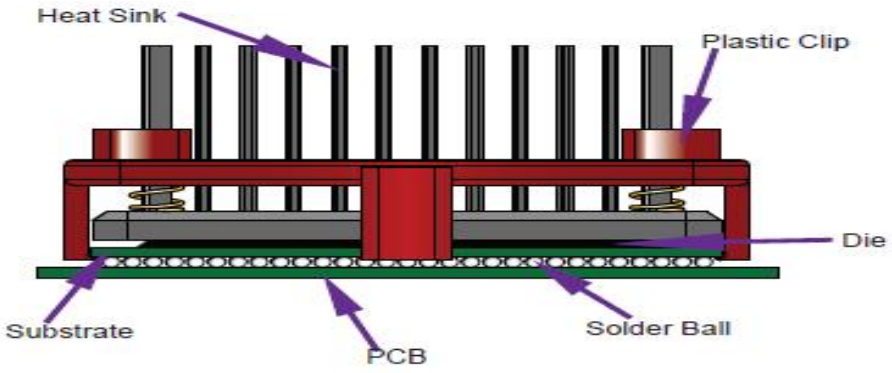

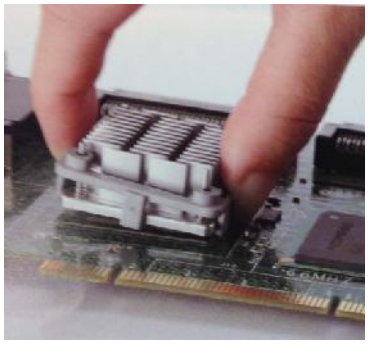

Wakefield-Vette's heat sink assembles onto chip set using the space that is between the PCB and the substrate of the solder balls. The solder balls provide a minimal gap of .5mm to .7mm. Attachment feature is below a .4mm thickness. The clipping system will not interfere or damage chip. Contact area is the edge of chip.

ASSEMBLY INSTRUCTION:

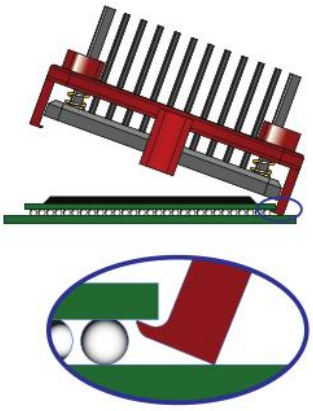

Step 1: Hook the clip under one side of the BGA chip set.

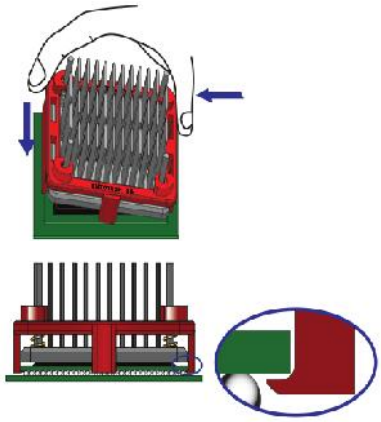

Step 2: Rotate assembly down until opposite side clip engages substrate edge of BGA chip set.

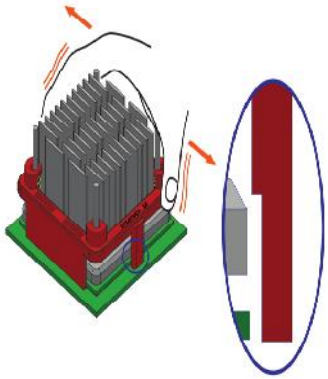

Step 3: Make sure the sop rods are clearing from edges of BGA chip set.

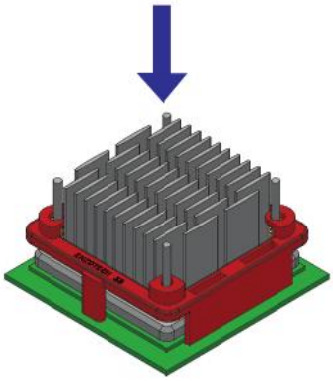

Step 4: Press firmly down to make sure clips fully engage edges of chip set. Heat Sink should not move around easily.

Random Vibration Test
Frequency : 5 Hz to 500 Hz
Acceleration : 3.13 grms
P.S.D : 0.01 g2/HZ (5 Hz)
0.02 g2/HZ (20 Hz to 500 Hz)
Test Axis : X, Y, Z axis
Test Time : 10 mins (Each axis)
Total Test Time : 30 mins

SHOCK TEST SPECIFICATION :
Wave Form : Half sine wave
Acceleration : 50 g
Duration Time : 11 ms
No. of Shock : Each axis 3 times
Shock Direction : ±X, ±Y, ±Z axis
Reliability & Communication
Testing Instruments