50565208

ODU TURNTAC®

Socket for SAE J3400 NACS 9.0mm / AWG 10



Basic information

Part number	50565208
Category	Contact

Contact insert description

Contact type	Sockets
Contact diameter	9 mm
Termination type	Crimp
Termination diameter	3.2 mm
Wire cross section AWG	AWG 10

Technical information

Nominal current single contact	32 A
Contact resistance	0.12 mOhm

Mechanical and environmental data

Mating cycles	20000
Upper temperature limit	105 °C
Max. operating temperature	50 °C
Min. operating temperature	-40°C
Total mating force (average) in N/module	15 N
Extraction force	13 N
Weight	23.24 g

Material and surface treatments

Material	Cu-alloy with matt chrome finish
Contact material	Cu-alloy with silver finish over nickel
Touch protection material	PA 66 black

Graphics and technical drawings

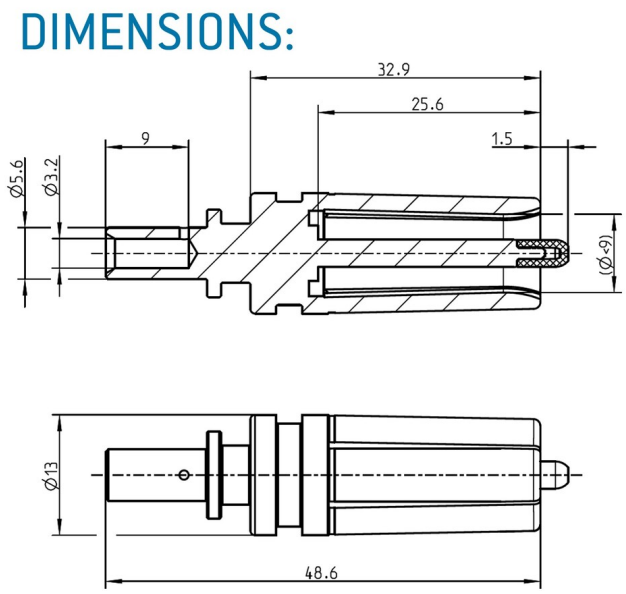

Further technical information and downloads

3D-File (STP File)
Assembly Instruction
Technical specifications