# Multilayer Ceramic Chip Capacitor

**Part Number:** 0603B102K101NT

**Description:** 0603 100Vdc 1.0nF ±10% X7R (2R1) - Contains Lead

A range of X7R MLC capacitors to suit a variety of applications. In a wide selection of chip sizes, rated voltages and terminations, including FlexiCap™, the world's first commercially available flexible termination.

WS2, WR2, WS3 and WR3 parts use StackiCap™ patented construction technology.

DR1, WR2 and WR3 parts have a voltage de-rating above 105°C.

Suffix code PXX or PX mandates the use of precious metal electrode (PME) materials. This may incur additional costs.

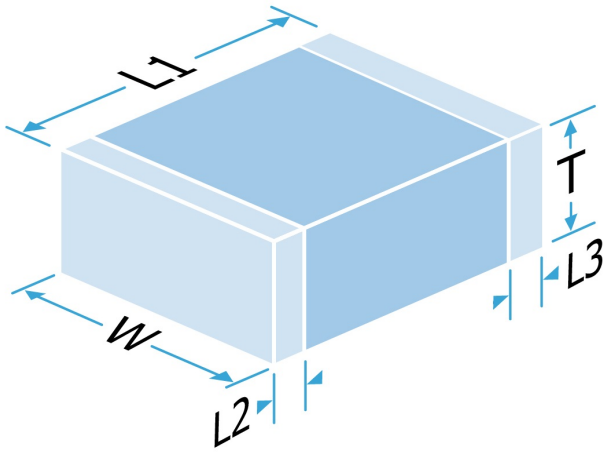


## Mechanical Specification

| | |
|---|---|
| Size Code | 0603 |
| Length (L1) in mm (") | 1.6 ± 0.15 (0.063 ± 0.006) |
| Width (W) in mm (") | 0.8 ± 0.15 (0.032 ± 0.006) |
| Thickness (T) in mm (") | 0.89 Max (0.035 Max) |
| Minimum Termination Band (L2,L3) in mm (") | 0.20 (0.008) |
| Maximum Termination Band (L2,L3) in mm (") | 0.40 (0.016) |
| Termination Material | Nickel Barrier, Sn Plated Solder (RoHS compliant) |
| Solderability | Per MIL-STD-202, Method 208 |
| Packaging | Tape and Reel, 4000 per reel |
| Conformal Coating | |

## General Electrical Specification

| | |
|---|---|
| Rated Voltage | 100Vdc |
| Nominal Capacitance Value | 1.0nF |
| Capacitance Tolerance | ±10% |
| Tangent of Loss Angle (Tan δ) | ≤0.025 |
| Capacitance and Tan δ Test Conditions | 1.0Vrms @ 1kHz |
| Voltage Proof<br>(Voltage applied for 5 secs max. @ 50mA max. charge current. 50% Max, RH) | 250Vdc |
| Min Insulation Resistance (IR) | 100.00GOhm @ 100Vdc |
| Dielectric Classification | X7R (2R1) - Contains Lead |
| Rated Temperature Range | -55°C / +125°C |
| Maximum Capacitance Change over Temperature Range | No DC Voltage ±15%<br>Rated DC Voltage - |
| Climatic Category (IEC) | - |
| Ageing Characteristic | <2% per decade (nominal capacitance is 1000 hour value) |


**Knowles Precision Devices - Sales**

Europe: KPD-Europe-sales@knowles.com

Asia: KPD-Asia-sales@knowles.com

USA: KPD-NA-sales@knowles.com

**www.knowlescapacitors.com**


This datasheet is for a standard item and is confirmed valid on the date generated, the latest published data for this part may differ and is available at http://www.knowlescapacitors.com or by contacting us.


© The information contained on this drawing is confidential and may not be copied in whole or part in any form or disclosed to a third party without the consent of Knowles and any customer mentioned within this specification.


Data is correct to the best of our knowledge, errors and omissions excepted.

Date: Sunday, October 04, 2026

20261004 160430097UTC

# Multilayer Ceramic Chip Capacitor

| **Part Number:** 0603B102K101NT | **Description:** 0603 100Vdc 1.0nF ±10% X7R (2R1) - Contains Lead |
|---|---|

## Environmental

| | |
|---|---|
| RoHS Compliant to 2011/65/EC as amended by 2015/863/EU | Non Compliant |
| REACH Compliant | Contains 1 to 8% w/w Lead Titanium Oxide (PbTiO3, CAS 12060-00-3) |
| California Proposition 65 | No exposure risk |

## Board Layout

Knowles' conventional 2-terminal chip capacitors can generally be mounted using pad designs in accordance with international specification IPC-7351, Generic Requirements for Surface Mount Design and Land Pattern Standards, but there are some other factors that have been shown to reduce mechanical stress, such as reducing the pad width to less than the chip width. In addition, the position of the chip on the board should be considered.

Some high voltage parts may require modifications to the board layout and/or the addition of a conformal coating to prevent flashover, especially under high humidity conditions. Board cleanliness and environmental conditions can also impact this. Refer to application note AN0043 for further information.

IPC-7351 pad design

| | 0603 | |
|---|---|---|
| C | 1.60mm | 0.063" |
| Y | 0.85mm | 0.033" |
| X | 1.00mm | 0.039" |

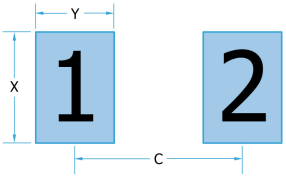


## Packaging

Tape packaging information for tape-and-reel parts:

Tape and reel packing of surface mounting chip capacitors for automatic placement are in accordance with IEC60286-3.

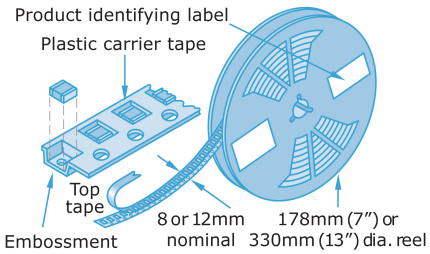


## Soldering

Reflow solder in accordance with IPC-A-610. Recommended reflow profile as laid down in IPC/JEDEC J-STD-020.

Wave soldering is also possible, but care must be taken for case sizes 1210 and larger and component thickness >1.0mm. Trials are encouraged.

Hand soldering is not recommended and can lead to component damage through thermal shock.

PdAg terminations are primarily intended for conductive epoxy attachment - they may be suitable for soldering but trials are recommended.

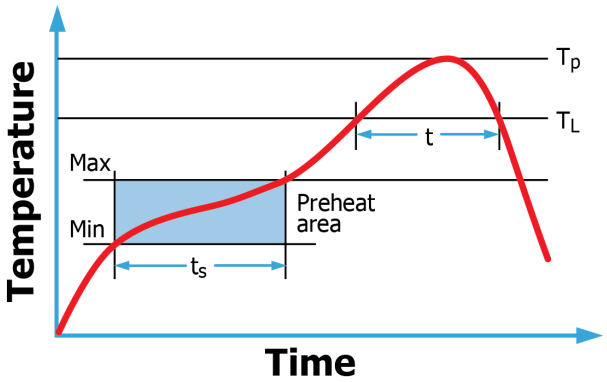


Application notes with mounting and handling guidance are available on request.

Compex DLI Johanson MFG Novacap Syfer Voltronics


**Knowles Precision Devices - Sales**

Europe: KPD-Europe-sales@knowles.com

Asia: KPD-Asia-sales@knowles.com

USA: KPD-NA-sales@knowles.com

**www.knowlescapacitors.com**


This datasheet is for a standard item and is confirmed valid on the date generated, the latest published data for this part may differ and is available at http://www.knowlescapacitors.com or by contacting us.


© The information contained on this drawing is confidential and may not be copied in whole or part in any form or disclosed to a third party without the consent of Knowles and any customer mentioned within this specification.


Data is correct to the best of our knowledge, errors and omissions excepted.

Date: Sunday, October 04, 2026


20261004 160430097UTC