MI DRG. NO.	55H02F	REV.
55H02		F

NON–MAGNETIC TRIMMER CAPACITOR

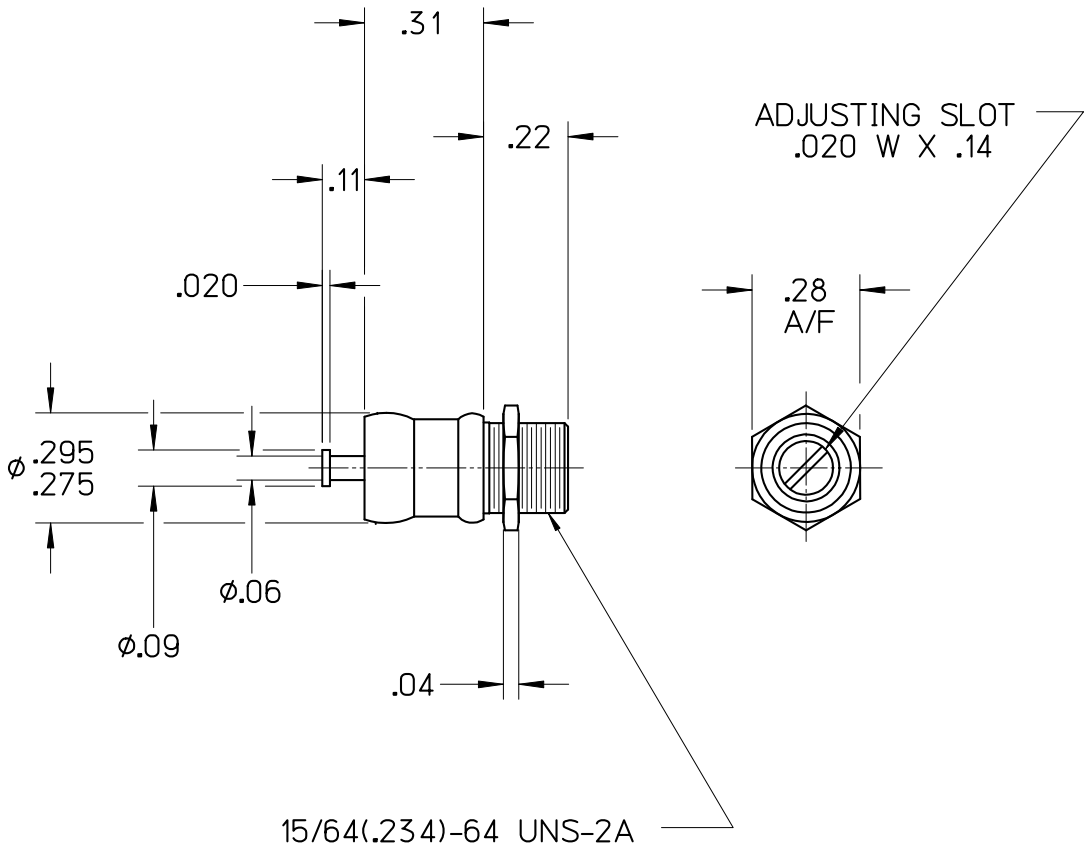

SPECIFICATIONS	FILE: AIROUT
CAPACITY RANGE	1.5pF TO 19pF (18 TURNS)
WORKING VOLTAGE	1000 VDC (TEST VOLT. 2000 VDC)
Q @175 MHz	> 1000
INSULATION RESISTANCE	> 10^6 MEGOHMS
TEMPERATURE RANGE	-65°C TO +125°
TUNING TORQUE	1.0 TO 5.0 OZ. IN.
ROTATIONAL LIFE	600 CYCLES
ULTRA-HIGH RESOLUTION TUNING	
UNIT CONSTRUCTION: NONMAGNETIC BRASS STRUCTURE WITH TEFLON ® DIELECTRIC	
GLAZED ALUMINA INSULATION	
574°F SOLDER USED IN ASSEMBLY	
GOLD, SILVER, & CHROMATE FINISH	
NON MAGNETIC TESTING FOR MAGNETIC SUSCEPTIBILITY, IS IN ACCORDANCE WITH JMC SPECIFICATION Q004.	
ACTUAL SIZE	

LEVEL	DATE	DRN.	CHK.	APP.	ECN
F	09/25/15	CZ	MAI	MAI	001346
E	3/13/14	RJV	RJV 3/13/14	MAI	001216

REVISIONS

DRN.	CHK.	APP.	SCALE
MLD	TAM	JHT	2" = 1"
DATE 04/24/02	DATE 04/29/02	DATE 04/29/02	.XX ± .015 .XXX ± .005

JOHANSON MANUFACTURING CORPORATION
ROCKAWAY VALLEY ROAD, BOONTON, N.J. 07005 (973)334-2676 FAX (973)334-2954
ELECTRONIC ACCURACY THROUGH MECHANICAL PRECISION

PROPRIETARY INFORMATION CONTAINED NOT TO BE USED WITHOUT JOHANSON MANUFACTURING CORPORATION APPROVAL