Altech Corp.® by BERNSTEIN

ENM2 Series

ENM2 VTW

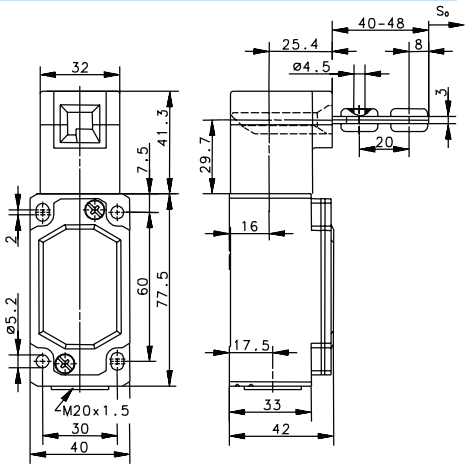

Switching Operation	Slow Action	High Activation Force	Radius Activation
1 NC / 1 NO Contacts	**601.6219.100** ENM2-U1Z VTW 11 12 23 24	– -	– -
1 NC Contacts	– -	– -	– -
2 NC Contacts	**601.6269.105** ENM2-A2Z VTW 11 12 21 22	– -	– -
2 NC / 1 NO Contacts Overlapping	**601.6269.104** ENM2-UV15Z VTW 15 16 25 26 33 34	– -	– -

Technical Information	Slow Action	High Activation Force	Radius Activation
Maximum Switching Voltage	240V		
Max. Switching Amps (up to)*	10A		
B10d (up to)*	20 Million		
Mechanical Service Life (up to)*	10 x 10^6		
Switching Frequency	≤ 30/min		
Operating Temperature	–30 °C to +80 °C		
Protection Rating	IP65		
Utilization Category (up to)*	AC-15, Ue/Ue 240V 3A		
Rate Insulation Voltage	400VAC		
Approvals	* Depending on switching system - see technical information for details		

Replacement actuator keys:

A1 ACTUATOR KEY
391.1702.228

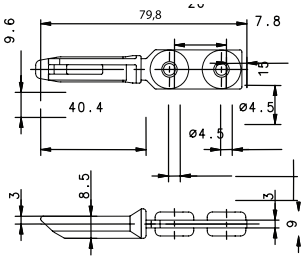

15.7″ Minimum Bend Radius

A2 ACTUATOR KEY
391.1702.229

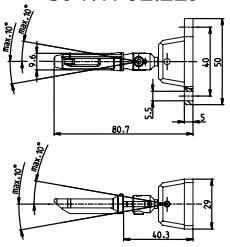

5.9″ Minimum Bend Radius

A3 ACTUATOR KEY
391.1702.230

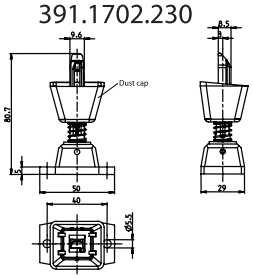

15.7″ Minimum Bend Radius

A4 ACTUATOR KEY
391.1702.231

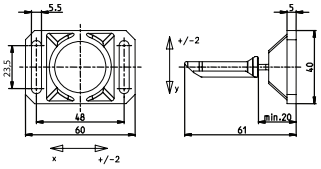

13.8″ Minimum Bend Radius

Drawing dimensions in mm

Altech Corp.® • 35 Royal Road • Flemington, NJ 08822-6000 • P (908)806-9400 • F (908)806-9490 • www.altechcorp.com