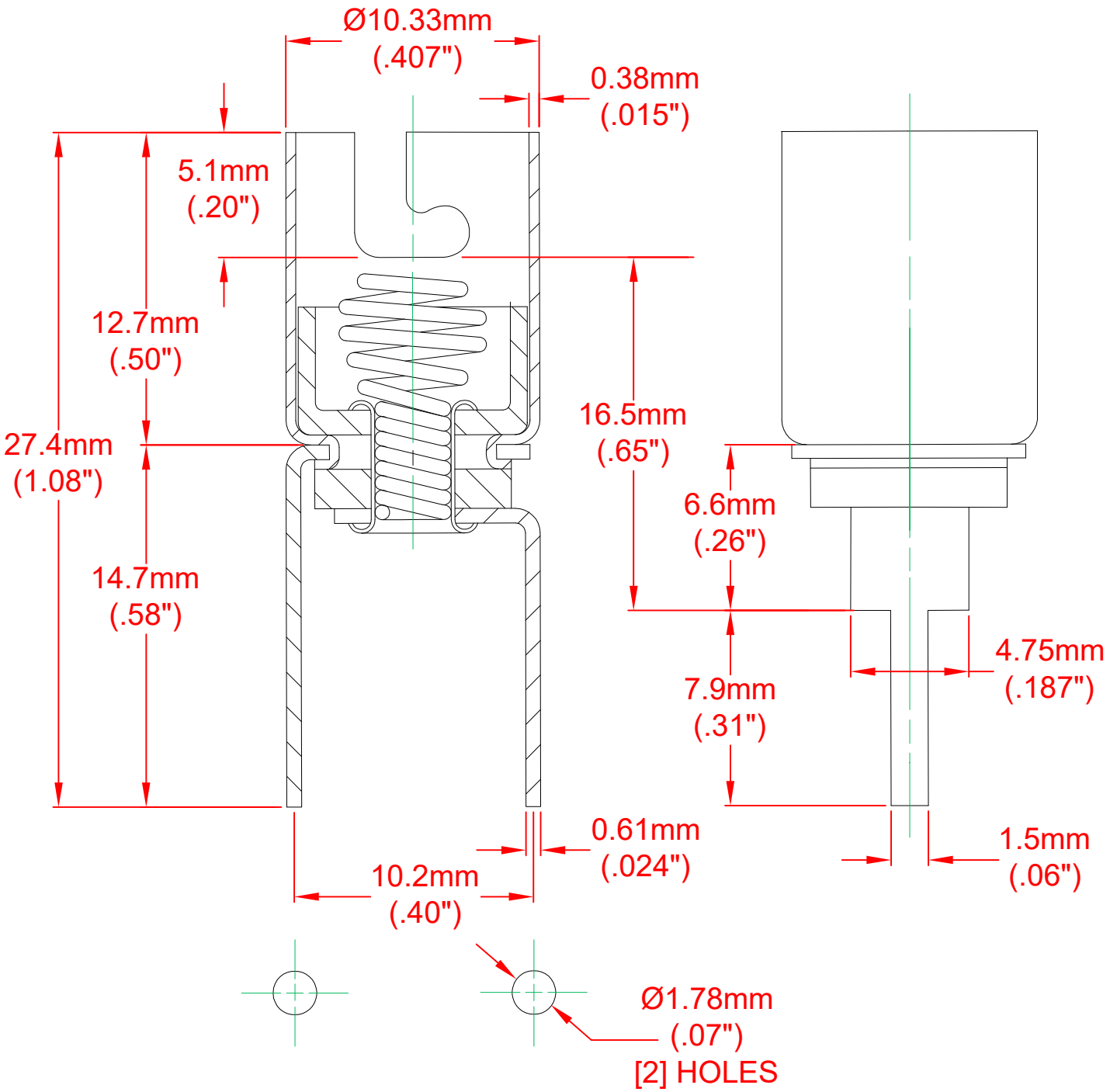

Recommended Hole Pattern for PCB

MATERIALS
Contacts - Steel, Tin Plate
Shell - Steel, Zinc Plate
Spring - Spring Steel
Insulators - Nylon 66 or Bakelite

REV. NO.	DESCRIPTION/ECO NUMBER	APPV'D DATE
A	DIM. CHANGE Ø9.4mm TO Ø10.33mm (.407")	9/5/18
	RELEASE & CANCEL P-1106-01	6/20/11

METRIC
THIRD ANGLE PROJECTION

DIMENSIONS ARE IN MILLIMETERS (INCHES)
TOLERANCE UNLESS OTHERWISE SPECIFIED ARE REFERENCE ONLY

JKL COMPONENTS CORPORATION

TITLE: T-3 1/4 MINIATURE BAYONET SOCKET

DRAWN BY	APPV'D BY	DATE	SIZE	FSCM NO.	DRAWING NO.
L. WENGSTROM	S.C.	9/5/18	A	55335	29MB-35

- CAD DRAWING -
MANUAL REVISIONS NOT PERMITTED

SCALE	RELEASED DATE	REVISION DATE	REV. NO.	SHEET
NONE	6/20/11	9/5/18	A	1 OF 1