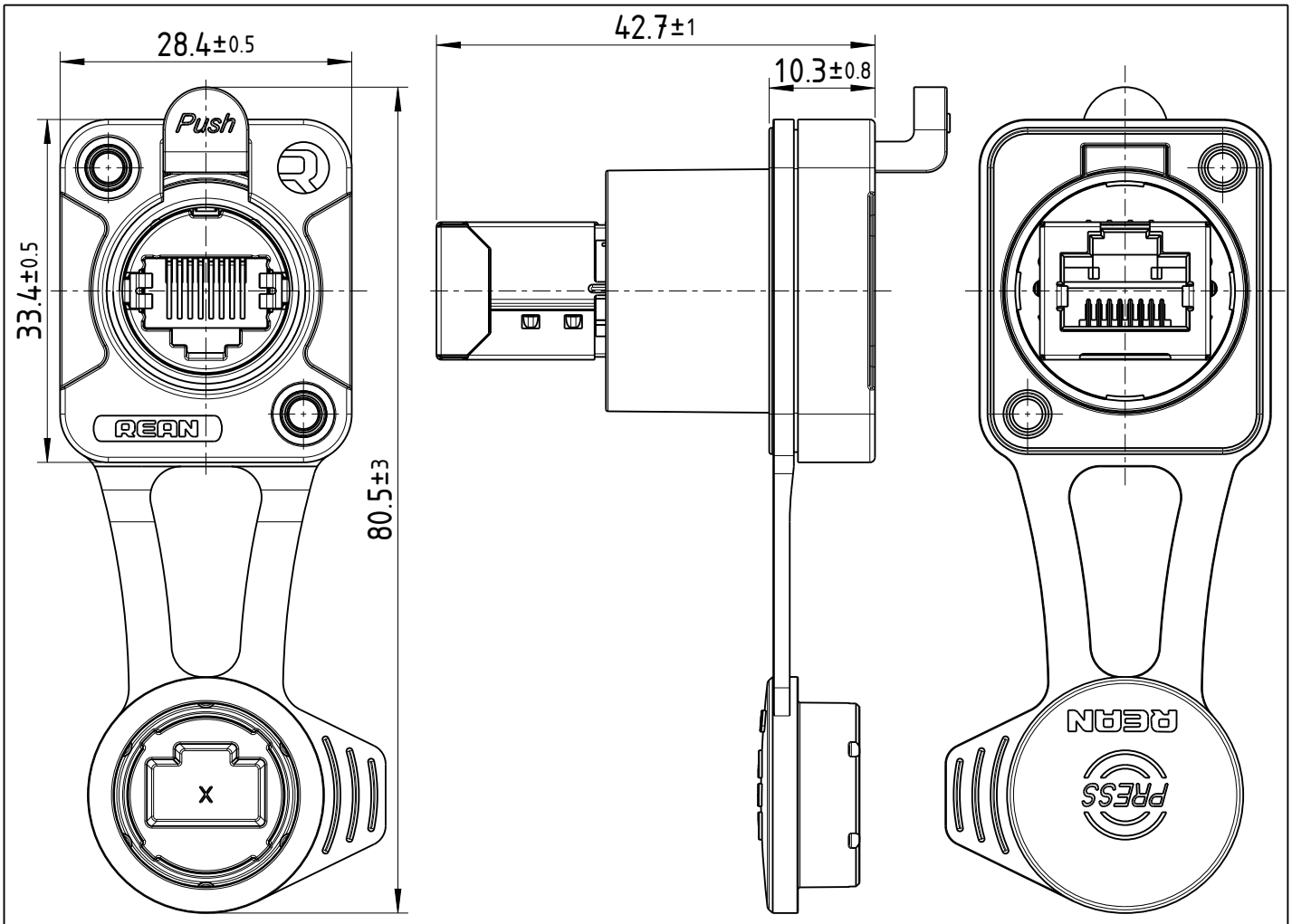

Panel cut out dimension:

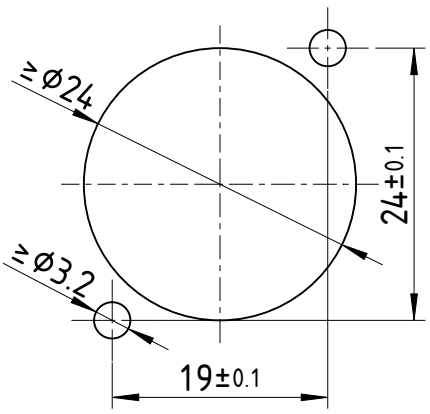

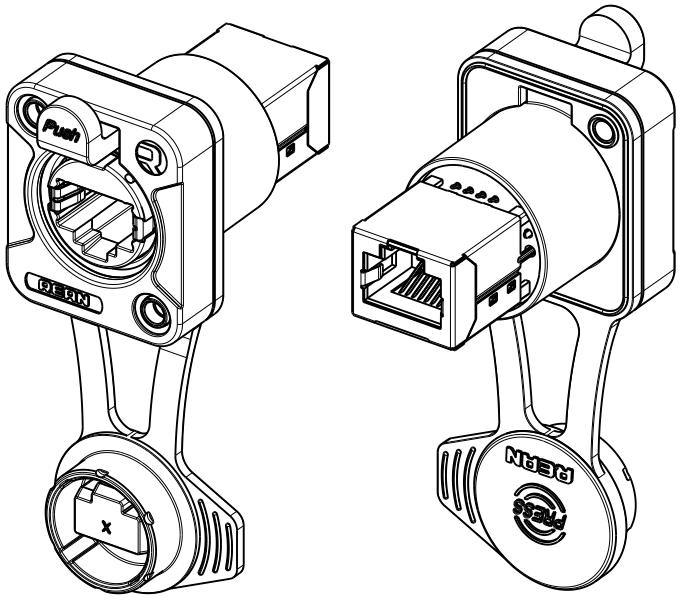

1:1 1:1

Sheet Number	Projection	Scale	Format	General Tolerancing	
1/1		1.5:1	A4	ISO 2768 mK	
Description			Created on/by	06.02.2025	Xia S.
RRE8F-Z-010*			Approved on/by	04.08.2026	Xia S.
			Article ID	Model ID	Drawing ID
			RRE8F-Z-01 0-0	30012213	20006838
Status			Revision	ECN Number	Neutrik Group
Released			-	-	

Copyright © Neutrik AG / Im alten Riet 143 / 9494 Schaan / Liechtenstein