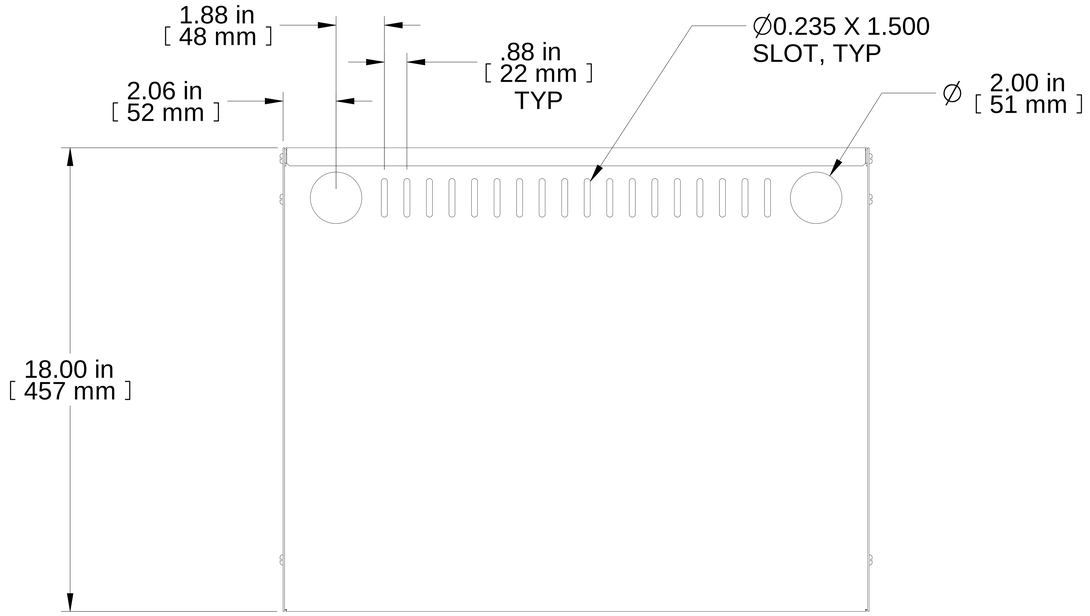

TOP VIEW

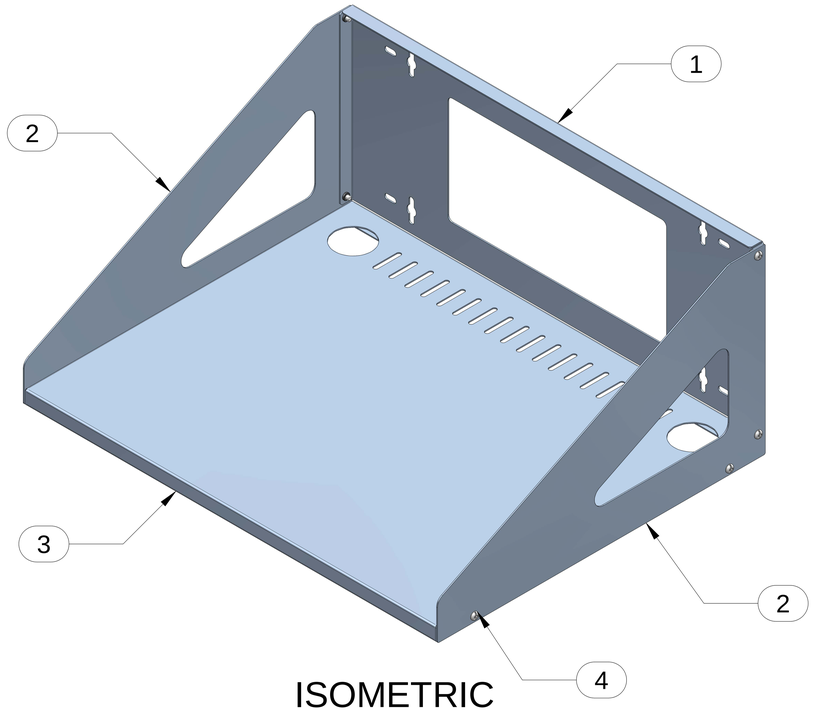

ISOMETRIC

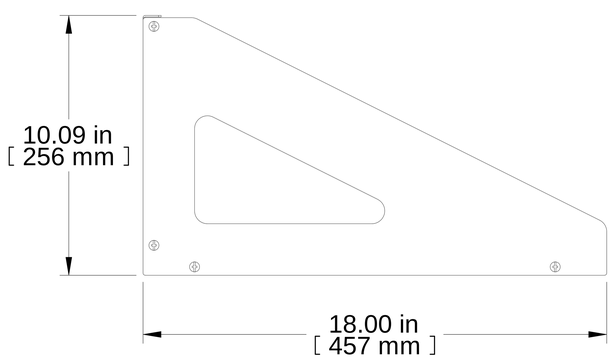

L.S. VIEW

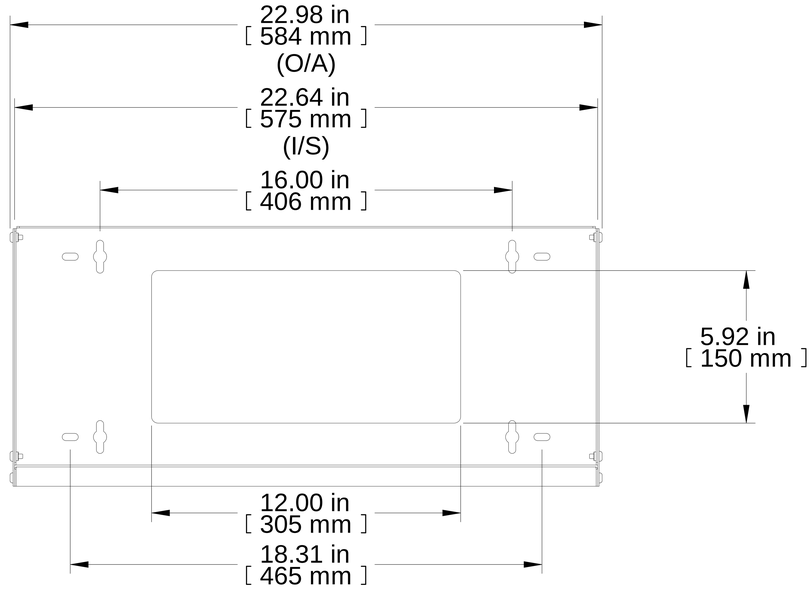

FRONT VIEW

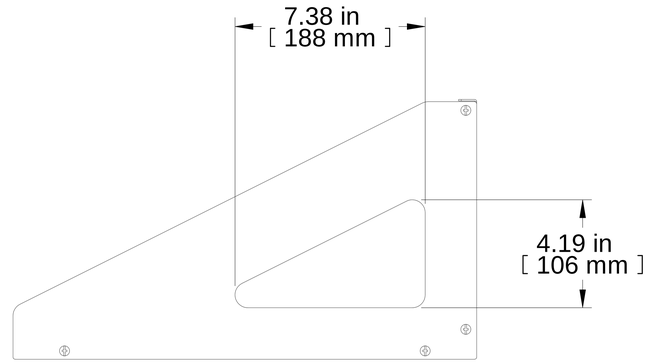

R.S. VIEW

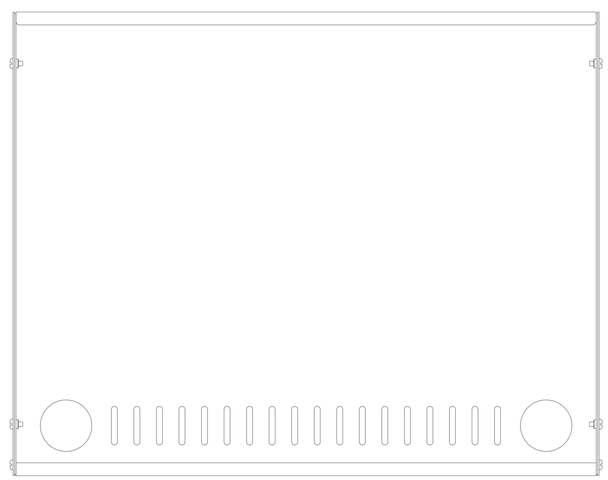

BOTTOM VIEW

Item Number	Title	Quantity
1	WMD REAR PANEL	1
2	WMD SIDE BRKT	2
3	WMD SHELF	1
4	SCREW 10-32 X 3/8 BDHD SLZP	8

PART NUMBERS

WMD18BK	PAINTED BLACK TEXTURED

NOTES

Mounting Hardware Not Included

See Hammond Website for Additional Accessories

Français

Pour tous les détails sur nos produits,
svp veuillez consulter notre site www.hammondmfg.com

Data subject to change without notice. Isometric drawing not to scale.
Les données sont sujettes à changement sans préavis.

HAMMOND MANUFACTURING®

www.hammondmfg.com

PART NO. **WMD18BK**