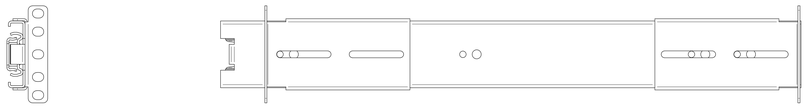

ASSEMBLED VIEW

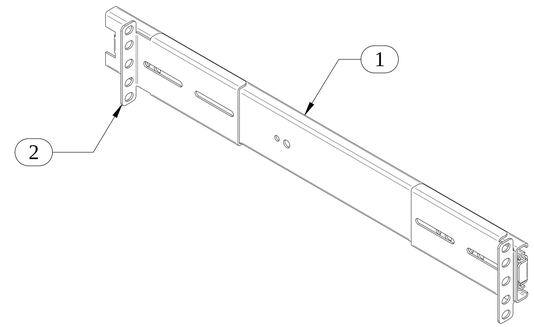


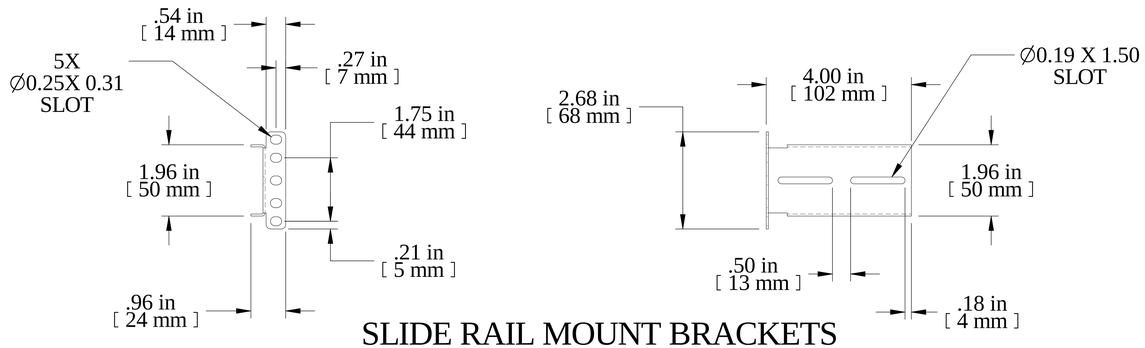


SLIDE RAIL MOUNT BRACKETS

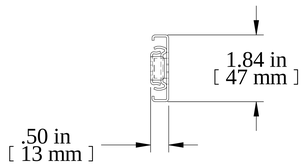


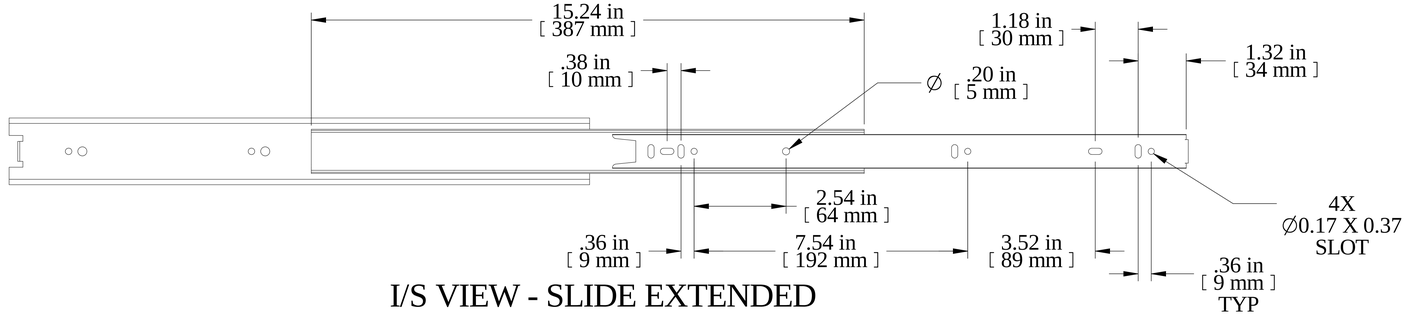


I/S VIEW - SLIDE EXTENDED

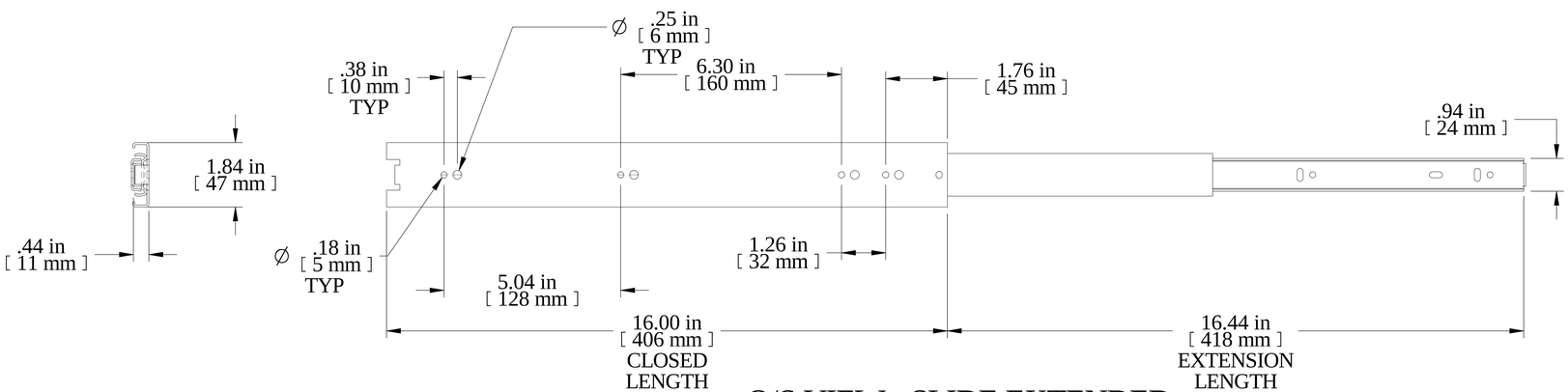


O/S VIEW - SLIDE EXTENDED

| Item Number | Document Number | Title | Quantity |
|---|---|---|---|
| 1 | SLD20004 | SLIDE 16" FULL TRAVEL | 1 |
| 2 | BKT86689 | SLIDE MTG BRACKET | 2 |

**PART NUMBERS**

| | |
|---|---|
| RSLIDE16 | Zinc Plate Finish |

**NOTES**

Slides Sold In Pairs
Includes: Assembly Hardware, 2 Slides, 4 Mounting Brackets
Some Assembly Required
Rack Mounting Hardware Not Included

**Français**

Pour tous les détails sur nos produits,
svp veuillez consulter notre site www.hammondmfg.com

Data subject to change without notice. Isometric drawing not to scale.
Les données sont sujettes à changement sans préavis.

RoHS

HAMMOND MANUFACTURING®

www.hammondmfg.com

PART NO. **RSLIDE16**