DATE	DESCRIPTION	REV.

INSTRUMENT CASE

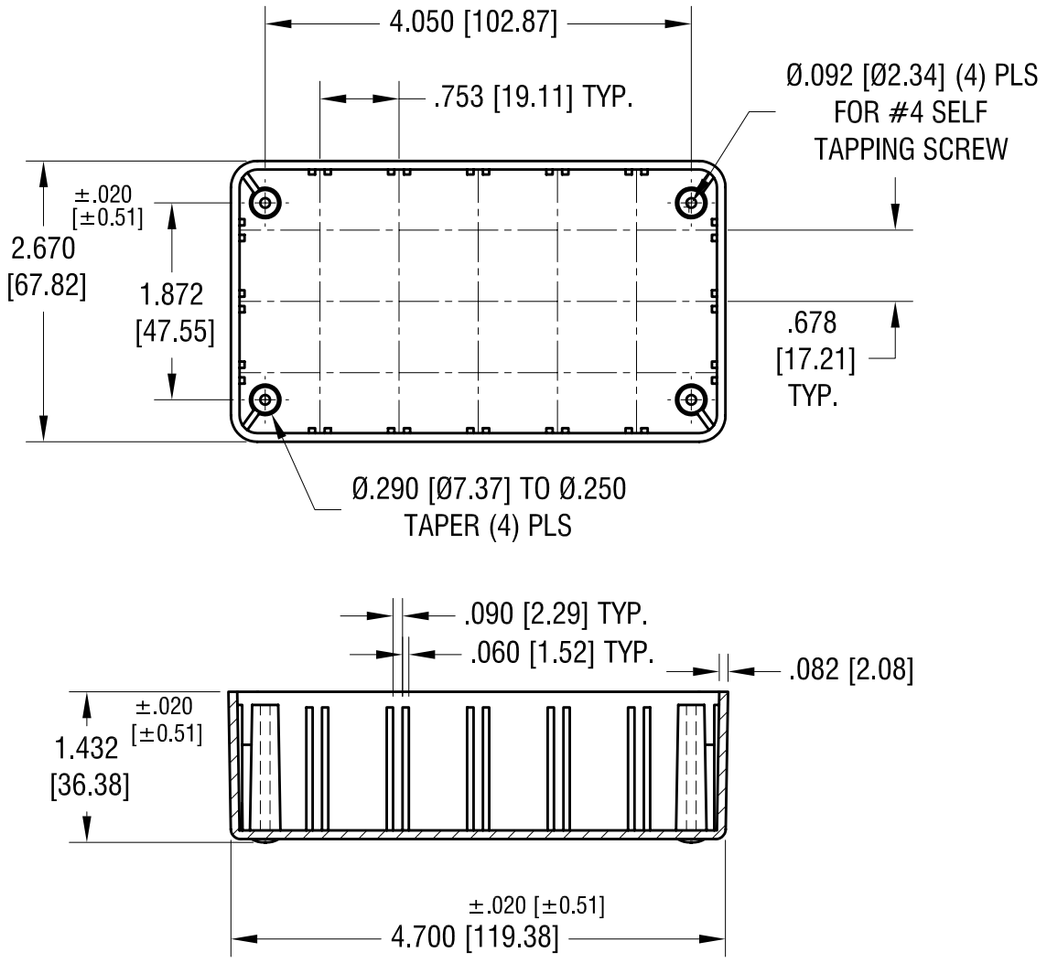

COVER

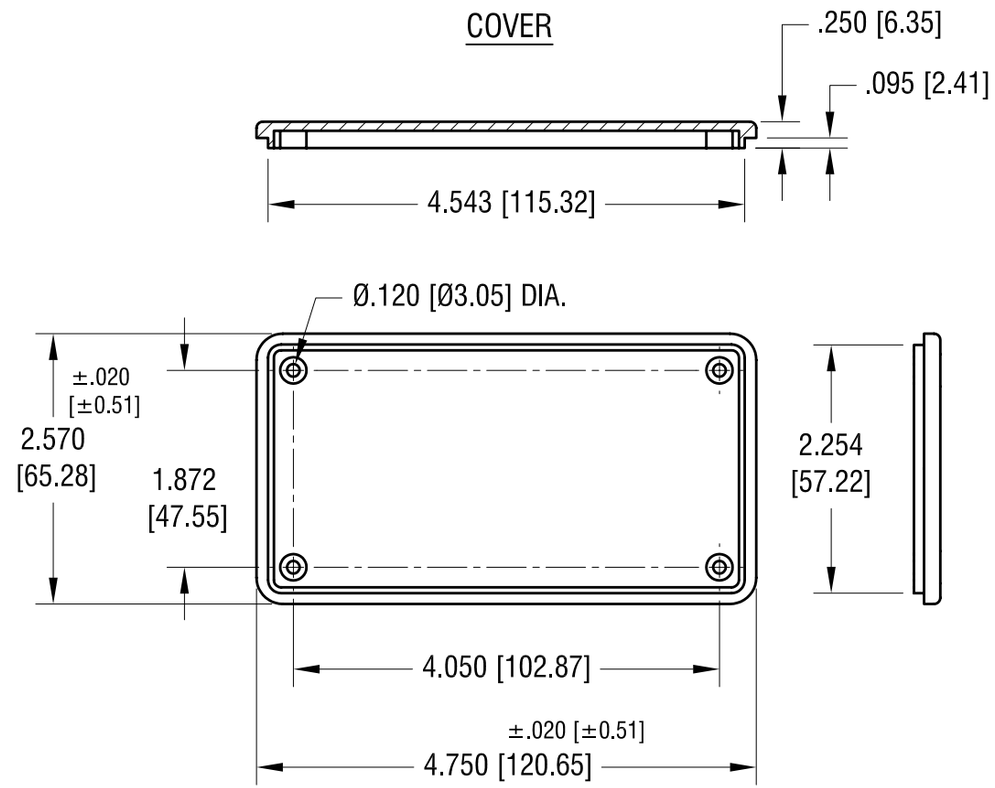

NOTE:

1. CASE SUPPLIED WITH COVER AND MOUNTING SCREWS.

THIS DOCUMENT IS THE PROPERTY OF KEYSTONE ELECTRONICS CORP. AND SHALL NOT BE REPRODUCED, DISTRIBUTED OR USED AS A BASIS FOR MANUFACTURE WITHOUT PRIOR WRITTEN PERMISSION FROM KEYSTONE ELECTRONICS CORP.

KEYSTONE ELECTRONICS CORP.
ASTORIA, N.Y. 11105-2017

PART NAME	INSTRUMENT CASE WITH COVER		
MATERIAL	BLUE STYRENE		
FINISH	-	DRN BY NT	DATE 8.28.07
		APP'D LN	SCALE .6X
TOLERANCES INCH [MM] DECIMAL ± .010 [± 0.25] ANGULAR ± 1° UNLESS OTHERWISE SPECIFIED	CODE C	DWG NO. 762	