| DATE | DESCRIPTION | REV. |
|---|---|---|
| 11.15.99 | CHANGE AS PER ECN 99–87 | A |
| 1.16.07 | CHANGE AS PER ECN 07–003 | B |
| 6.12.09 | CHANGE AS PER ECN 09–067 | C |
| 10.24.18 | CHANGE AS PER ECN 18–042 | D |
| 6.27.22 | CHANGE AS PER ECN 22–103<br>E1 WAS .126, E2 AWS .087 | E |
| 5.06.24 | UPDATE DIMENSIONS TO MATCH PRODUCTION | F |

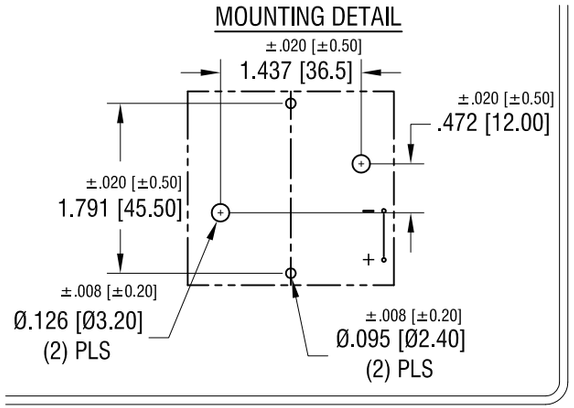


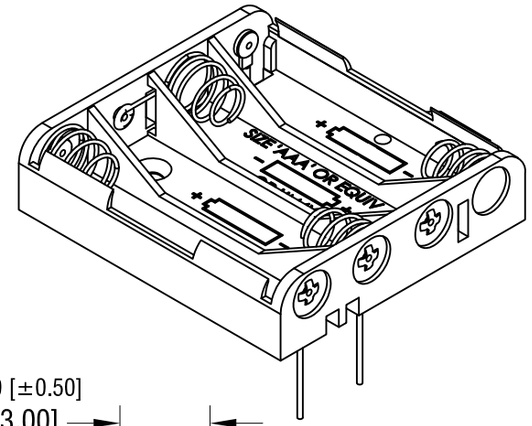


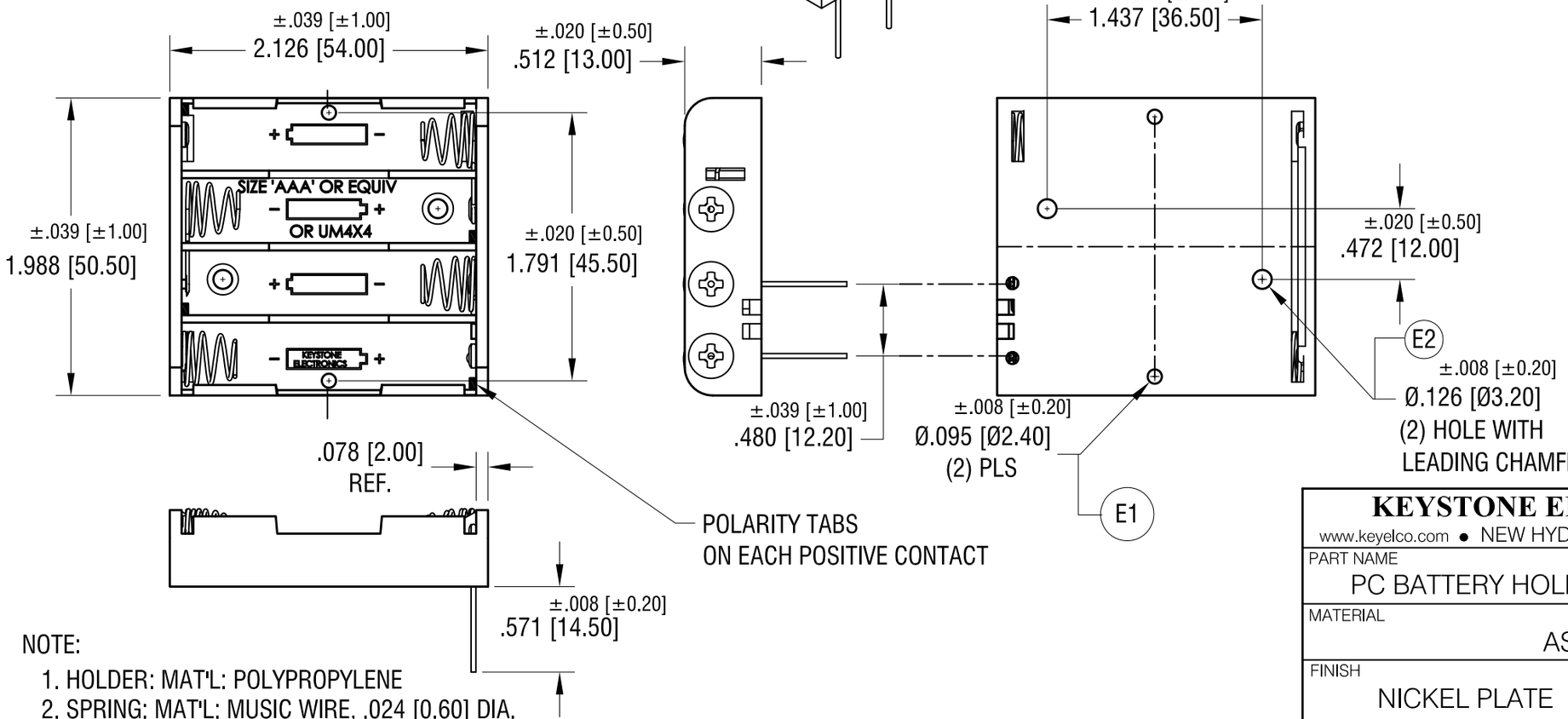


NOTE:

1. HOLDER: MAT'L: POLYPROPYLENE
2. SPRING: MAT'L: MUSIC WIRE, .024 [0.60] DIA.
3. PC TERMINALS: MAT'L: BRASS, .032 [0.81] DIA.
4. RIBBON: MAT'L: NYLON, RED, 5.50 [139.62] REF. LONG

THIS DOCUMENT IS THE PROPERTY OF KEYSTONE ELECTRONICS CORP. AND SHALL NOT BE REPRODUCED, DISTRIBUTED OR USED AS A BASIS FOR MANUFACTURE WITHOUT PRIOR WRITTEN PERMISSION FROM KEYSTONE ELECTRONICS CORP.

**KEYSTONE ELECTRONICS CORP.**
www.keyelco.com • NEW HYDE PARK, NY 11040 • Tel (516) 328-7500

PART NAME: PC BATTERY HOLDER (4) 'AAA' W/ RIBBON

MATERIAL: AS NOTED

FINISH: NICKEL PLATE

DRN BY: BOONE | DATE: 6.09.99

APP'D: MR | SCALE: 1X

TOLERANCES: INCH [MM]
DECIMAL ± 0.15 [± 0.38 ]
ANGULAR ± 1°
UNLESS OTHERWISE SPECIFIED

CODE: C

DWG NO. 2481