DATE	DESCRIPTION	REV.
9.17.04	CHANGE AS PER ECN 04–106	C
7.05.11	ECN 11–090 SPLIT C/M TO 'C' & 'M'	D
8.15.11	CHANGE AS PER ECN 11–108	E
1.10.22	ECN 22–008, F1 WAS.931 F2 WAS 1.250±.010	F
9.18.23	PER ECN23–163 ADDED PACKAGING	G

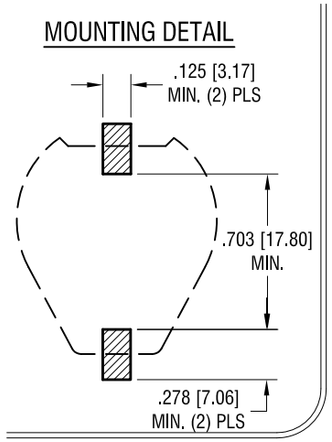

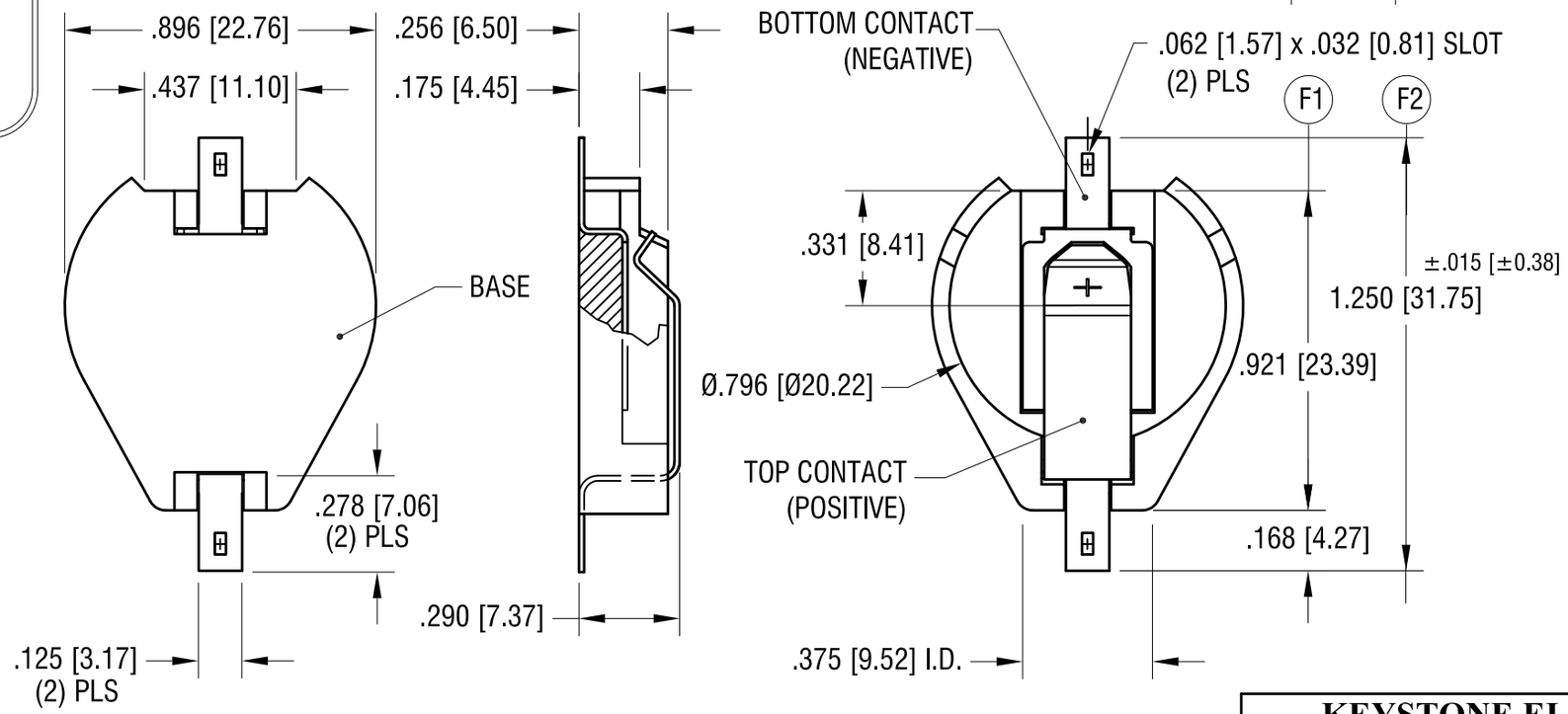

NOTES:

1. BASE:
   MAT'L - HIGH TEMPERATURE NYLON (UL 94V-0)
   COLOR BLACK
2. CONTACTS (TOP AND BOTTOM):
   MAT'L - .015 [0.38] TH'K SPRING STEEL
   FINISH: TIN NICKEL PLATE
3. BATTERY HOLDER SUPPLIED IN MSL-2 PACKAGING

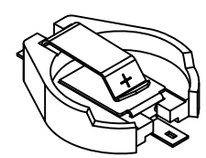

ACTUAL SIZE

THIS DOCUMENT IS THE PROPERTY OF KEYSTONE ELECTRONICS CORP. AND SHALL NOT BE REPRODUCED, DISTRIBUTED OR USED AS A BASIS FOR MANUFACTURE WITHOUT PRIOR WRITTEN PERMISSION FROM KEYSTONE ELECTRONICS CORP.

KEYSTONE ELECTRONICS CORP.

www.keyelco.com • NEW HYDE PARK, NY 11040 • Tel (516) 328-7500

PART NAME	20mm BATTERY HOLDER, SMT		
MATERIAL	AS NOTED		
FINISH	AS NOTED	DRN BY BOONE	DATE 8.9.95
		APP'D RH	SCALE 2X
TOLERANCES INCH [MM] DECIMAL ± .010 [± 0.25] ANGULAR ± 1° UNLESS OTHERWISE SPECIFIED	CODE C	DWG NO. 1063	