MELCHER™

# S Series

## 100 Watt DC-DC and AC-DC Converters




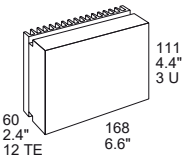


The S Series of DC-DC and AC-DC converters represents a broad and flexible range of power supplies for use in advanced electronic systems. Features include high efficiency, high reliability, low output voltage noise and excellent dynamic response to load/line changes. LS models can be powered by DC or AC with a wide-input frequency range (without PFC).

The converter inputs are protected against surges and transients. An input over- and undervoltage lockout circuitry disables the outputs, if the input voltage is outside of the specified range. Certain types include an inrush current limiter preventing circuit breakers and fuses from tripping at switch-on.

## Features

- RoHS lead-free-solder and lead-solder-exempted products available
- 5 year warranty for RoHS compliant products with an extended temperature range
- Compliant with EN 50155, EN 50121-3-2
- Compliant to EN 45545 (version V108 or later)
- Class I equipment
- Extremely wide input voltage ranges from 8 to 385 VDC, and 85 to 264 VAC, 47 to 440 Hz
- Input over- and undervoltage lockout
- Adjustable output voltage with remote on/off
- 1 or 2 outputs: ES1, no load, overload, and short-circuit proof
- Rectangular current limiting characteristic
- PCBs protected by by lacquer
- Very high reliability
- Safety-approved to the latest edition of IEC/EN 62368-1 and UL/CSA 60950-1

### Table of Contents


Description....2
Model Selection....2
Functional Description....5
Electrical Input Data....6
Electrical Output Data....9
Auxiliary Functions....13
Electromagnetic Compatibility (EMC)....17
Immunity to Environmental Conditions....19
Mechanical Data....20
Safety and Installation Instructions....22
Description of Options....26
Accessories....35


bel
POWER | PROTECT | CONNECT

belfuse.com

Please read our datasheet & drawing disclaimer here.

## Description

All outputs are open- and short-circuit proof, and are protected against overvoltages by means of built-in suppressor diodes. The output can be inhibited by a logic signal applied to pin 18 (i). If the inhibit function is not used, pin 18 must be connected with pin 14 to enable the outputs.

LED indicators display the status of the converter and allow for visual monitoring of the system at any time.

Full input-to-output, input-to-case, output-to-case, and output to output isolation is provided. The converters are designed, built, and safety-approved to the international safety standards IEC/EN 62368-1. They observe EN 50155 and EN 50121-3-2 and are particularly suitable for railway applications.

The case design allows operation at nominal load up to 71 °C in a free-air ambient temperature. If forced cooling is provided, the ambient temperature may exceed 71 °C, but the case temperature must remain below 95 °C under all conditions.

A temperature sensor generates an inhibit signal, which disables the outputs when the case temperature $T_C$ exceeds the limit. The outputs are automatically re-enabled, when the temperature drops below the limit.

Various options are available to adapt the converters to individual applications.

The converters may either be plugged into a 19" DIN-rack system according to IEC 60297-3, or mounted to a chassis.

**Important**: For applications requiring compliance with IEC/EN 61000-3-2 (harmonic distortion), please use our LS4000 or LS5000 Series with incorporated power factor correction (PFC).

## Model Selection

Non-standard input/output configurations or special customer adaptations are available on request.

*Table 1a: Models AS, BS*

| Output 1 | | Output 2 | | Input Voltage | Efficiency [1] | Input Voltage | Efficiency [1] | Options [4] |
|---|---|---|---|---|---|---|---|---|
| $V_{o\,nom}$ [VDC] | $I_{o\,nom}$ [A] | $V_{o\,nom}$ [VDC] | $I_{o\,nom}$ [A] | $V_{i\,min}$ – $V_{i\,max}$ 8 - 35 VDC | $\eta_{min}$ [%] | $V_{i\,min}$ – $V_{i\,max}$ 14 - 70 VDC | $\eta_{min}$ [%] | |
| 5.1 | 16 | - | - | AS1001-9RG | 76 | BS1001-9RG | 77 | -7, P, D, V [2], T, B, B1, non-G |
| 12 | 8 | - | - | AS1301-9RG | 81 | BS1301-9RG | 83 | |
| 15 | 6.5 | - | - | AS1501-9RG | 83 | BS1501-9RG | 85 | -7, P, D, T, B, B1, non-G |
| 24 | 4.2 | - | - | AS1601-9RG | 84 | BS1601-9RG | 86 | |
| 12 | 4 | 12 [3] | 4 | AS2320-9RG | 79 | BS2320-9RG | 80 | |
| 15 | 3.2 | 15 [3] | 3.2 | AS2540-9RG | 80 | BS2540-9RG | 82 | -7, P, D, T, B, B1, non-G |
| 24 | 2 | 24 [3] | 2 | AS2660-9RG | 80 | BS2660-9RG | 82 | |

1 Min. efficiency at $V_{i\,nom}$, $I_{o\,nom}$ and $T_A$ = 25 °C. Typical values are approximately 2% better.
2 Option V is possible for 5.1 V output only and excludes option D.
3 Second output semi-regulated
4 Models FS, CS, DS, ES, LS are available as -7 or -9E.

NFND: Not for new designs. Preferred for new designs

*Table 1b: Models FS, CS*

| Output 1 | | Output 2 | | Input Voltage | Efficiency [1] | Input Voltage | Efficiency [1] | Options [4] |
|---|---|---|---|---|---|---|---|---|
| $V_{o\,nom}$ [VDC] | $I_{o\,nom}$ [A] | $V_{o\,nom}$ [VDC] | $I_{o\,nom}$ [A] | $V_{i\,min}$ – $V_{i\,max}$ 20 - 100 VDC | $\eta_{min}$ [%] | $V_{i\,min}$ – $V_{i\,max}$ 28 - 140 VDC | $\eta_{min}$ [%] | |
| 5.1 | 16 | - | - | FS1001-9ERG | 77 | CS1001-9RG | 77 | -7, P, D, V [2], T, B, B1, non-G |
| 12 | 8 | - | - | FS1301-9ERG | 83 | CS1301-9ERG | 83 | |
| 15 | 6.5 | - | - | FS1501-9ERG | 84 | CS1501-9ERG | 84 | -7, P, D, T, B, B1, non-G |
| 24 | 4.2 | - | - | FS1601-9ERG | 86 | CS1601-9ERG | 85 | |
| 12 | 4 | 12 [3] | 4 | FS2320-9ERG | 80 | CS2320-9ERG | 80 | |
| 15 | 3.2 | 15 [3] | 3.2 | FS2540-9ERG | 82 | CS2540-9ERG | 82 | -7, P, D, T, B, B1, non-G |
| 24 | 2 | 24 [3] | 2 | FS2660-9ERG | 82 | CS2660-9ERG | 82 | |



Asia-Pacific +86 755 298 85888
EMEA +353 61 531 820
North America +1 866 513 2839
powersupport@belf.com
belfuse.com

© 2025 Bel Fuse Inc. BCD20004-G_AG 29 October 2025

# S Series

## 100 W DC-DC and AC-DC Converters

*Table 1c: Models DS, ES, LS*

| Output 1 | | Output 2 | | Input Voltage | Effic.[1] | Input Voltage | Effic.[1] | Input Voltage | Effic.[1] | Options[4] |
|---|---|---|---|---|---|---|---|---|---|---|
| $V_{o\ nom}$ [VDC] | $I_{o\ nom}$ [A] | $V_{o\ nom}$ [VDC] | $I_{o\ nom}$ [A] | $V_{i\ min} – V_{i\ max}$ 44 - 220 VDC | $\eta_{min}$ [%] | $V_{i\ min} – V_{i\ max}$ 67 - 385 VDC | $\eta_{min}$ [%] | $V_{i\ min} – V_{i\ max}$ 88 - 372 VDC 85 - 264 VAC | $\eta_{min}$ [%] | |
| 5.1 | 16 | - | - | DS1001-9ERG | 79 | ES1001-9ERG | - | LS1001-9ERG | 78 | -7, P, D, V [2], T, B, B1, non-G |
| 12 | 8 | - | - | DS1301-9ERG | 84 | ES1301-9ERG | 83 | LS1301-9ERG | 83 | -7, P, D, T, B, B1, non-G |
| 12.84[5] | 7.5 | - | - | DS1740-9ERG[5] | | - | - | LS1740-9ERG[5] | | |
| 15 | 6.5 | - | - | DS1501-9ERG | 86 | ES1501-9ERG | 84 | LS1501-9ERG | 84 | |
| 24 | 4.2 | - | - | DS1601-9ERG | 86 | ES1601-9ERG | 86 | LS1601-9ERG | 85 | |
| 12 | 4 | 12 [3] | 4 | DS2320-9ERG | 81 | ES2320-9ERG | 81 | LS2320-9ERG | 80 | -7, P, D, T, B, B1, non-G |
| 15 | 3.2 | 15 [3] | 3.2 | DS2540-9ERG | 82 | ES2540-9ERG | 83 | LS2540-9ERG | 81 | |
| 24 | 2 | 24 [3] | 2 | DS2660-9ERG | 83 | ES2660-9ERG | 83 | LS2660-9ERG | 81 | |
| 25.68[6] | 1.8 | 25.68[3,6] | 1.8 | DS2740-9ERG[6] | | - | - | LS2740-9ERG[6] | | -7, T, B, B1, non-G |

1 Min. efficiency at $V_{i\ nom}$, $I_{o\ nom}$ and $T_A$ = 25 °C. Typical values are approximately 2% better.
2 Option V is possible for 5.1 V output only and excludes option D.
3 Second output semi-regulated
4 Models FS, CS, DS, ES, LS are available as -7 or -9E.
5 Battery loader for 12 V batteries. $V_o$ is controlled by the battery temperature sensor (see *Accessories*) within 12.62 – 14.12 V. Options P, D, V are not available.
6 Battery loader for 24 V (and 48 V batteries with series-connected outputs). $V_o$ is controlled by the battery temperature sensor (see *Accessories*) within 25.25 – 28.25 V (50.5 – 56.5 V for 48 V batteries). Options P, D, and V are not available.

NFND: Not for new designs. Preferred for new designs



© 2025 Bel Fuse Inc. BCD20004-G_AG 29 October 2025

# S Series

## 100 W DC-DC and AC-DC Converters

MELCHER™

### Part Number Description

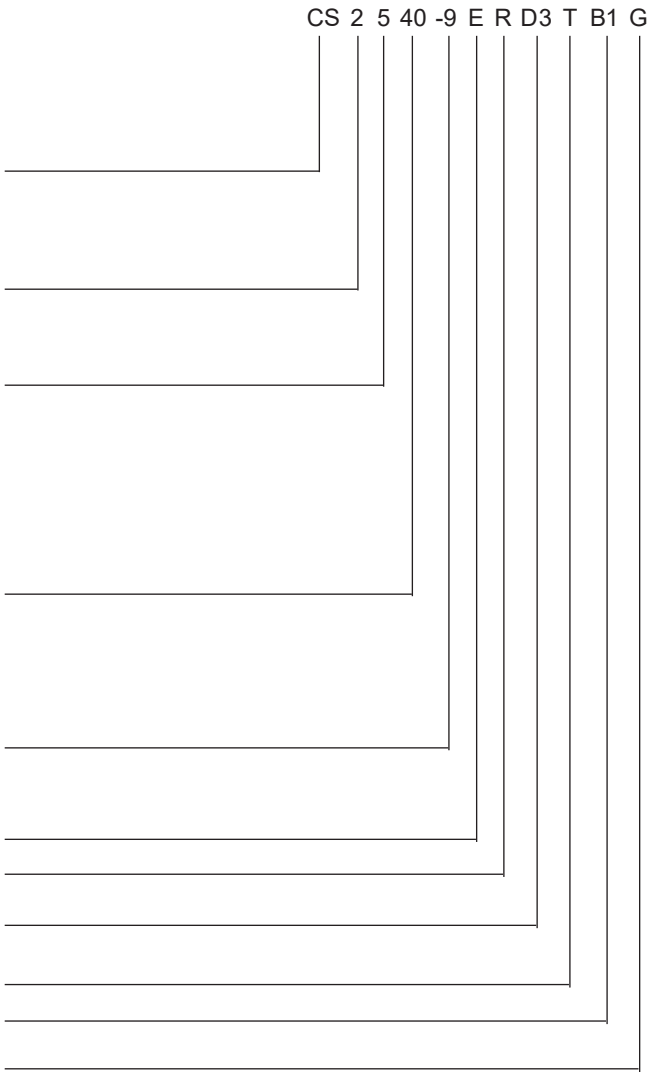


Operating input voltage $V_i$:
- 8 – 35 VDC ..... AS
- 14 – 70 VDC ..... BS
- 20 – 100 VDC ..... FS
- 28 – 140 VDC ..... CS
- 44 – 220 VDC ..... DS
- 67 – 385 VDC ..... ES
- 100 – 264 VAC or 88 – 372 VDC ..... LS

Number of outputs ..... 1, 2

Nominal voltage of output 1 (main output) $V_{o1\ nom}$
- 5.1 V ..... 0, 1, 2
- 12 V ..... 3
- 15 V ..... 4, 5
- 24 V ..... 6
- Other voltages [1] ..... 7, 8

Nominal voltage of output 2 $V_{o2\ nom}$
- None (single-output models) ..... 01
- 12 V, 12 V ..... 20
- 15 V, 15 V ..... 40
- 24 V, 24 V ..... 60
- Other specifications or additional features [1] ..... 21 – 99

Operational ambient temperature range $T_A$:
- –25 to 71 °C ..... -7
- –40 to 71 °C ..... -9
- Other [1] ..... -0, -5, -6

Auxiliary functions and options:
- Inrush current limitation ..... E [2]
- Output voltage control input ..... R [3]
- Potentiometer (output voltage adjustment) ..... P [3]
- Undervoltage monitor (D0 – DD, to be specified) ..... D [4]
- ACFAIL signal (V2, V3, to be specified) ..... V [4]
- Current share control ..... T
- Cooling plate standard case ..... B or B1
- Cooling plate for long case 220 mm [1] ..... B2 [1]
- RoHS-compliant for all 6 substances ..... G

1 Customer-specific models
2 Option E is mandatory for all -9 models, except AS and BS.
3 Feature R excludes option P and vice versa. Option P is not available for battery charger models.
4 Option D excludes option V and vice versa; option V is only available for models with 5.1 V single output.

NFND: Not for new designs. Preferred for new designs

**Note:** The sequence of options must follow the order above. This part number description is descriptive only; it is not intended for creating part numbers.

**Example:** CS2540-9ERD3TB1G: DC-DC converter, operating input voltage range 28 – 140 VDC, 2 electrically isolated outputs, each providing 15 V, 3.2 A, input current limiter E, control input R to adjust the output voltages, undervoltage monitor D3, current share feature T, cooling plate B1, and RoHS-compliant for all six substances.

### Product Marking

Basic type designation, applicable approval marks, CE mark, warnings, pin designation, patents and company logo, identification of LEDs, test sockets, and potentiometer.

Specific type designation, input voltage range, nominal output voltages and currents, degree of protection, batch no., serial no., and data code including production site, modification status, and date of production.



**Asia-Pacific** +86 755 298 85888
**EMEA** +353 61 531 820
**North America** +1 866 513 2839
powersupport@belf.com
belfuse.com

© 2025 Bel Fuse Inc. BCD20004-G_AG 29 October 2025

## Functional Description

The input voltage is fed via an input fuse, an input filter, a bridge rectifier (LS models only), and an inrush current limiter to the input capacitor $C_1$. This capacitor sources a single-transistor forward converter with a special clamping circuit and provides the power during the hold-up time.

Each output is powered by a separate secondary winding of the main transformer. The resultant voltages are rectified and their ripple smoothed by a power choke and an output filter. The control logic senses the main output voltage $V_{o1}$ and generates, with respect to the maximum admissible output currents, the control signal for the switching transistor of the forward converter.

The second output of double-output models is tracking to the main output, but has its own current limiting circuit. If the main output voltage drops due to current limitation, the second output voltage will fall as well and vice versa.

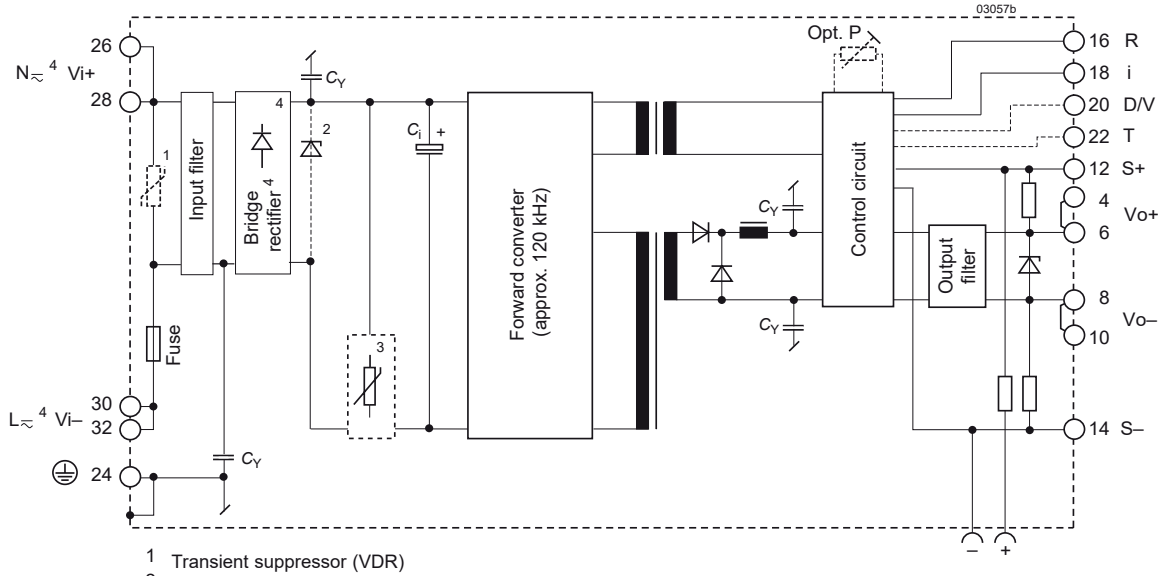


1 Transient suppressor (VDR)
2 Suppressor diode (AS, BS, FS models)
3 For CS, DS, ES, LS: Either NTC (-7 models only) or option E
4 LS models only

*Fig. 1*
*Block diagram of single-output converters*

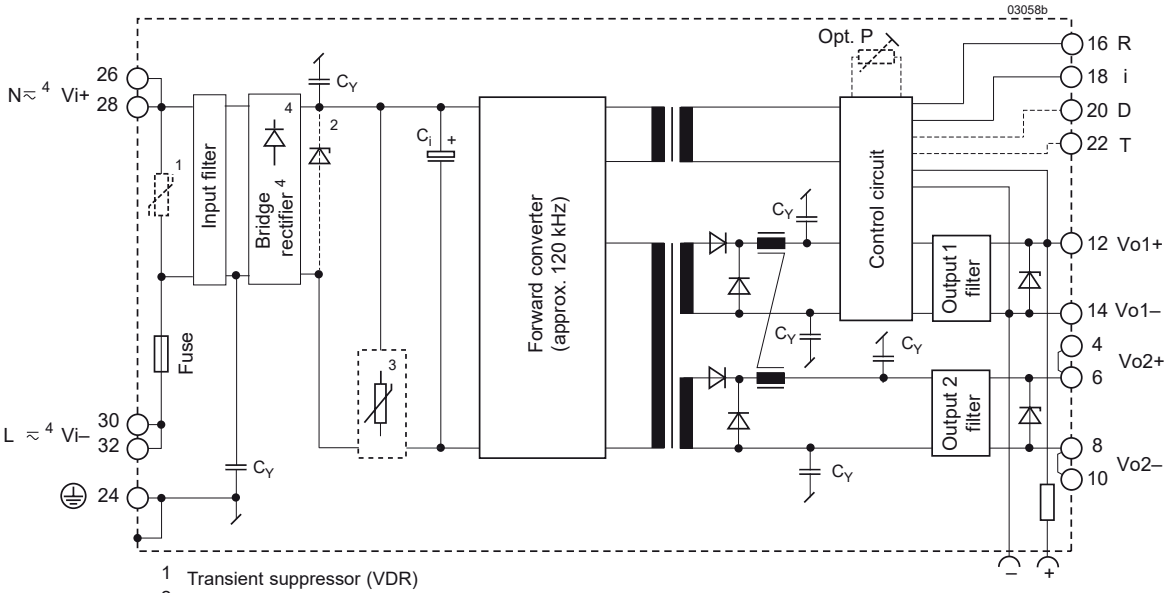


1 Transient suppressor (VDR)
2 Suppressor diode (AS, BS, FS models)
3 For CS, DS, ES, LS: Either NTC (-7 models only) or option E
4 LS models only

*Fig. 2*
*Block diagram of double-output models*


© 2025 Bel Fuse Inc. BCD20004-G_AG 29 October 2025

## Electrical Input Data

General conditions:

- $T_A$ = 25 °C, unless $T_C$ is specified.
- Pin 18 connected to pin 14, $V_o$ adjusted to $V_{o\,nom}$ (if option P); R input not connected.
- Sense line pins S+ and S– connected to Vo+ and Vo– respectively.

*Table 2a: Input data*

| Model | | | AS | | | BS | | | FS | | | Unit |
|---|---|---|---|---|---|---|---|---|---|---|---|---|
| Characteristics | | Conditions | min | typ | max | min | typ | max | min | typ | max | |
| $V_i$ | Operating input voltage | $I_o$ = 0 – $I_{o\,max}$ | 8 | | 35 | 14 | | 70 | 20 | | 100 | VDC |
| $V_{i\,nom}$ | Nominal input voltage | $T_{C\,min}$ – $T_{C\,max}$ | | 15 | | | 30 | | | 50 | | |
| $I_i$ | Input current | $V_{i\,nom}$, $I_{o\,nom}$ [1] | | 7.5 | | | 4.3 | | | 2.6 | | A |
| $P_{i\,0}$ | No-load input power | $V_{i\,min}$ – $V_{i\,max}$ | | | 2.5 | | | 2.5 | | | 2.5 | W |
| $P_{i\,inh}$ | Idle input power | Unit inhibited | | | 1.5 | | | 1.5 | | | 1.5 | |
| $R_i$ | Input resistance | $T_C$ = 25 °C | 65 | | | 100 | | | 70 | | | mΩ |
| $R_{NTC}$ | NTC resistance [2] | | | no NTC | | | no NTC | | | no NTC | | |
| $C_i$ | Input capacitance | | 832 | 1040 | | 300 | 370 | | 1200 | 1500 | | µF |
| $V_{i\,RFI}$ | Conducted input RFI | EN 55022, $V_{i\,nom}$, $I_{o\,nom}$ | | A | | | A | | | B | | |
| | Radiated input RFI | | | A | | | A | | | A | | |
| $V_{i\,abs}$ | Input voltage limits without damage | | 0 | | 40 | 0 | | 84 | 0 | | 100 | VDC |

*Table 2b: Input data*

| Model | | | CS | | | DS | | | ES | | | LS | | | Unit |
|---|---|---|---|---|---|---|---|---|---|---|---|---|---|---|---|
| Characteristics | | Conditions | min | typ | max | min | typ | max | min | typ | max | min | typ | max | |
| $V_i$ | Operating input voltage | $I_o$ = 0 – $I_{o\,max}$, $T_{C\,min}$ – $T_{C\,max}$ | 28 | | 140 | 44 | | 220 | 67 | | 385 | 88 | | 372 | VDC |
| | | | | | | | | | | | | 85 [4] | | 264 [4] | VAC |
| $V_{i\,nom}$ | Nominal input voltage | | | 60 | | | 110 | | | 220 | | | 310 | | VDC |
| $I_i$ | Input current | $V_{i\,nom}$, $I_{o\,nom}$ [1] | | 2.1 | | | 1.1 | | | 0.55 | | | 0.37 | | A |
| $P_{i\,0}$ | No-load input power | $V_{i\,min}$ – $V_{i\,max}$ | | | 2.5 | | | 2.5 | | | 2.5 | | | 2.5 | W |
| $P_{i\,inh}$ | Idle input power | Unit inhibited | | | 1.5 | | | 1.5 | | | 1.5 | | | 4.5 | |
| $R_i$ | Input resistance | $T_C$ = 25 °C | 150 | | | 170 | | | 180 | | | 480 | | | mΩ |
| $R_{NTC}$ | NTC resistance [2] | | | 1000 | | | 2000 | | | 4000 | | | 4000 | | |
| $C_i$ | Input capacitance | | 960 | 1200 | | 264 | 330 | | 216 | 270 | | 216 | 270 | | µF |
| $V_{i\,RFI}$ | Conducted input RFI | EN 55022, $V_{i\,nom}$, $I_{o\,nom}$ | | B | | | B | | | B | | | B | | |
| | Radiated input RFI | | | B | | | A | | | A | | | A | | |
| $V_{i\,abs}$ | Input voltage limits without damage | | 0 | | 154 | 0 | | 400 [3] | 0 | | 400 | -400 | | 400 | VDC |

[1] Both outputs of double-output models are loaded with $I_{o\,nom}$.
[2] Valid for -7 versions without option E (-9 versions exclude NTC). This is the nominal value at 25 °C and applies to cold converters at initial switch-on cycle. Subsequent switch-on/off cycles increase the inrush current peak value.
[3] For 1 s max.
[4] Nominal frequency range is 50 – 60 Hz. Operating frequency range is 47 – 440 Hz (440 Hz for 115 V mains). For frequencies ≥63 Hz, refer to *Installation Instructions*.



Asia-Pacific
+86 755 298 85888
EMEA
+353 61 531 820
North America
+1 866 513 2839
powersupport@belf.com
belfuse.com

© 2025 Bel Fuse Inc. BCD20004-G_AG 29 October 2025

## Input Transient Protection

A suppressor diode or a VDR (depending upon the input voltage range) together with the input fuse and a symmetrical input filter form an effective protection against high input transient voltages which, typically occur in most installations, but especially in battery-driven mobile applications.

Standard nominal battery voltages are: 12, 24, 36, 48, 60, 72, 110, and 220 V. Railway batteries are specified with a tolerance of –30% to +25%, with short excursions up to ±40%.

In certain applications, additional surges according to RIA12 are specified. The power supply must not switch off during these surges, and since their energy can practically not be absorbed, an extremely wide input range is required. The ES input range for 110 V batteries has been designed and tested to meet this requirement.

## Input Fuse

A fuse mounted inside the converter protects against severe defects. This fuse may not fully protect the converter, when the input voltage exceeds 200 VDC. In applications, where the converters operate at source voltages above 200 VDC, an external fuse or a circuit breaker at system level should be installed.

*Table 3: Fuse Specification*

| Model | Fuse type | Reference | Rating |
|---|---|---|---|
| AS | fast-blow [1] | Littlefuse 314 | 30 A, 125 V |
| BS | fast-blow [1] | Littlefuse 314 | 25 A, 125 V |
| FS | slow-blow [2] | Schurter SPT | 16 A, 250 V |
| CS | slow-blow [2] | Schurter SPT | 12.5 A, 250 V |
| DS | slow-blow [2] | Schurter SPT | 8 A, 250 V |
| ES | slow-blow [2] | Schurter SPT | 4 A, 250 V |
| LS | slow-blow [2] | Schurter SPT | 4 A, 250 V |

[1] Fuse size 6.3 × 32 mm [2] Fuse size 5 × 20 mm

## Inrush Current Limitation

The FS, CS, DS, ES, LS models incorporate an NTC resistor in the input circuitry, which at initial turn-on reduces the peak inrush current value by a factor of 5 – 10 such protecting connectors and switching devices from damage. Subsequent switch-on cycles within short periods will cause an increase of the peak inrush current value due to the warming-up of the NTC resistor. See also *Option E*.

The inrush current peak value (initial switch-on cycle) can be determined by following calculation; see also fig. 3:

$$I_{inr\,p} = \frac{V_{i\,source}}{(R_{s\,ext} + R_i + R_{NTC})}$$

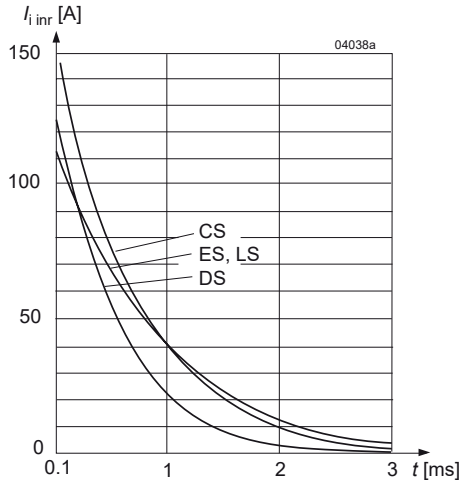


*Fig. 3*
*Typical inrush current versus time at $V_{i\,max}$, $R_{ext}$ = 0 Ω. For AS, BS, FS, and for application-related values, use the formula in this section to get realistic results.*

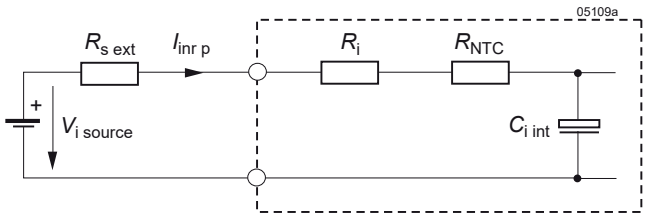


*Fig. 4*
*Equivalent input circuit*


© 2025 Bel Fuse Inc. BCD20004-G_AG 29 October 2025

## Static Input Current Characteristics

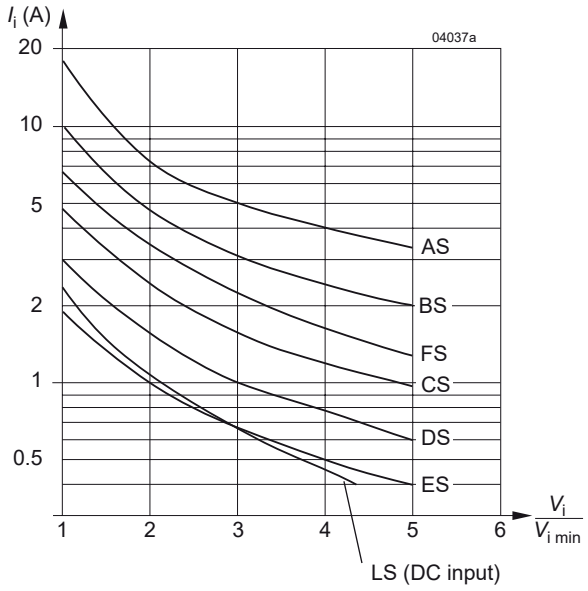


*Fig. 5*
*Typical input current versus relative input voltage*

## Reverse Polarity

The converters (except LS models) are not protected against reverse polarity at the input to avoid unwanted power losses. In general, only the input fuse will trip.

LS models are fully protected by the built-in bridge rectifier.

## Input Under-/Overvoltage Lockout

If the input voltage remains below approx. 0.8 $V_{i\,min}$ or exceeds approx. 1.1 $V_{i\,max}$, an internally generated inhibit signal disables the output(s). When checking this function, the absolute maximum input voltage $V_{i\,abs}$ should be observed. Between $V_{i\,min}$ and the undervoltage lock-out level the output voltage may be below the value defined in table *Electrical Output data.*

## Hold-Up Time

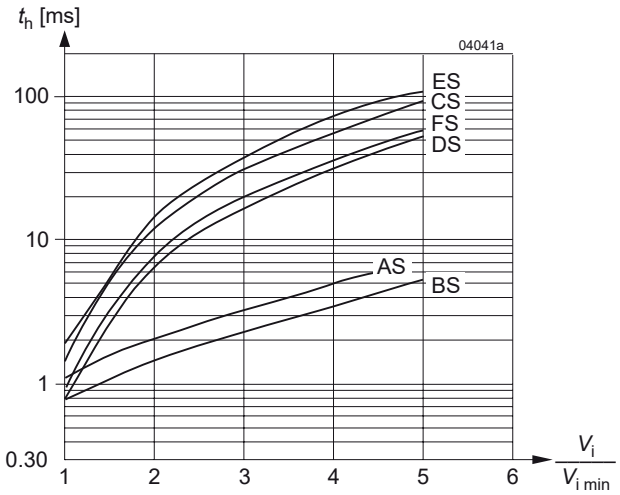


*Fig. 6a*
*Typical hold-up time $t_h$ versus relative DC input voltage. $V_i/V_{i\,min}$. DC-DC converters require an external series diode in the input path, if other loads are connected to the same input supply lines.*

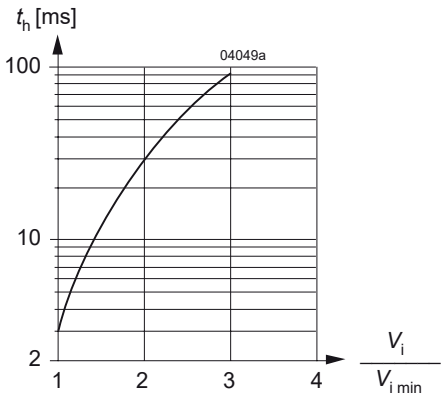


*Fig. 6b*
*Typical hold-up time $t_h$ versus relative AC input voltage (LS models)*


© 2025 Bel Fuse Inc. BCD20004-G_AG 29 October 2025

## Electrical Output Data

General Conditions:

– $T_A$ = 25 °C, unless $T_C$ is specified.
– Pin 18 (i) connected to pin 14 (S– or Vo1–), R input not connected, $V_o$ adjusted to $V_{o\,nom}$ (option P),
– Sense line pins 12 (S+) and 14 (S–) connected to pins 4 (Vo1+) and 8 (Vo1–), respectively.

*Table 5: Output data of single-output models*

| Model | | | | AS – LS1001 | | | AS – LS1301/1740 [5] | | | AS – LS1501 | | | AS – LS1601 | | | Unit |
|---|---|---|---|---|---|---|---|---|---|---|---|---|---|---|---|---|
| Nom. output voltage | | | | 5.1 V | | | 12 V / 12.84 V [5] | | | 15 V | | | 24 V | | | |
| Characteristics | | | Conditions | min | typ | max | min | typ | max | min | typ | max | min | typ | max | |
| $V_o$ | Output voltage | | $V_{i\,nom}$, $I_{o\,nom}$ | 5.07 | | 5.13 | 11.93 [5] | | 12.07 [5] | 14.91 | | 15.09 | 23.86 | | 24.14 | V |
| $V_{o\,BR}$ | Output protection (suppressor diode) [7] | | | 6.0 | | | 15.2/17.5 [5] | | | 19.6 | | | 28.5 | | | V |
| $I_{o\,nom}$ | Output current nom. [1] | | $V_{i\,min}$ – $V_{i\,max}$<br>$T_{C\,min}$ – $T_{C\,max}$ | | 16 | | | 8/7.5 [5] | | | 6.5 | | | 4.2 | | A |
| $I_{o\,L}$ | Output current limit | | $V_{i\,min}$ – $V_{i\,max}$ | 16.2 | | | 8.2/7.7 [5] | | | 6.7 | | | 4.4 | | | A |
| $V_o$ | Output noise [3] | Low frequency [8] | $V_{i\,nom}$, $I_{o\,nom}$<br>BW = 20 MHz | | | 5 | | | 5 | | | 5 | | | 5 | $mV_{pp}$ |
| | | Switching frequ. | | | 10 | | | 5 | | | 5 | | | 5 | | $mV_{pp}$ |
| | | Total incl. spikes | | | 50 | | | 50 | | | 60 | | | 90 | | $mV_{pp}$ |
| $\Delta V_{o\,u}$ | Static line regulation with respect to $V_{i\,nom}$ | | $V_{i\,min}$ – $V_{i\,max}$<br>$I_{o\,nom}$ | | | ±15 | | | ±20 | | | ±25 | | | ±30 | mV |
| $\Delta V_{o\,l}$ | Static load regulation [10] | | $V_{i\,nom}$<br>(0.1 – 1) $I_{o\,nom}$ | | | -20 | | | -25 | | | -30 | | | -40 | mV |
| $V_{o\,d}$ | Dynamic load regulation [3] | Voltage deviation [6] | $V_{i\,nom}$<br>$I_{o\,nom}$ ↔ 0.5 $I_{o\,nom}$ | | ±100 | | | ±100 | | | ±100 | | | ±100 | | mV |
| $t_d$ | | Recovery time [6] | | | 0.4 | | | 0.5 | | | 0.5 | | | 0.5 | | ms |
| $\alpha_{v\,o}$ | Temperature coefficient of output voltage [4] | | $I_{o\,nom}$<br>$T_{C\,min}$ – $T_{C\,max}$ | | ±0.02 | | | ±0.02 | | | ±0.02 | | | ±0.02 | | %/K |

[1] If the output voltages are increased above $V_{o\,nom}$ through R-input control, option P setting, remote sensing or option T, the output currents should be reduced accordingly so that $P_{o\,nom}$ is not exceeded.
[2] See *Output voltage regulation*
[3] Measured according to IEC/EN 61204 with a probe according to annex A
[4] For battery charger applications, a defined negative temperature coefficient can be provided by using a temperature sensor (see *Accessories)*, but we recommend choosing the special battery charger models.
[5] Especially designed for battery charging using the temperature sensor (see *Accessories*). $V_o$ is set to 12.84 V ±1% (R-input open)
[6] See *Dynamic load regulation*
[7] Breakdown voltage of the incorporated suppressor diode (1 mA; 10 mA for 5 V output). Exceeding $V_{o\,BR}$ is dangerous for the suppressor diode.
[8] LS models only (twice the input frequency)



Asia-Pacific
+86 755 298 85888
EMEA
+353 61 531 820
North America
+1 866 513 2839
powersupport@belf.com
belfuse.com

© 2025 Bel Fuse Inc. BCD20004-G_AG 29 October 2025

*Table 6a: Output data of double-output models. General conditions as per table 5.*

| Model (Nom. output voltage) | | | | AS – LS2320 (2 x 12 V) | | | | | | AS – LS2540 (2 x 15 V) | | | | | | Unit |
|---|---|---|---|---|---|---|---|---|---|---|---|---|---|---|---|---|
| Characteristics | | | Conditions | Output 1 | | | Output 2 | | | Output 1 | | | Output 2 | | | |
| | | | | min | typ | max | min | typ | max | min | typ | max | min | typ | max | |
| $V_o$ | Output voltage | | $V_{i\,nom}$, $I_{o1\,nom}$, $I_{o2\,nom}$ | 11.93 | | 12.07 | 11.82 | | 12.18 | 14.91 | | 15.09 | 14.78 | | 15.22 | V |
| $V_{o\,BR}$ [1] | Output protection (suppressor diode) | | | 15.2 | | | 15.2 | | | 19.6 | | | 19.6 | | | |
| $I_{o\,nom}$ | Output current nom. [2] | | $V_{i\,min} - V_{i\,max}$ $T_{C\,min} - T_{C\,max}$ | 4 | | | 4 | | | 3.2 | | | 3.2 | | | A |
| $I_{o\,L}$ | Output current limit [9] | | $V_{i\,min} - V_{i\,max}$ | 4.2 | | | 4.2 | | | 3.4 | | | 3.4 | | | |
| $V_o$ | Output noise [3] | Low frequency [8] | $V_{i\,nom}$, $I_{o\,nom}$ BW = 20 MHz | | | 5 | | | 5 | | | 5 | | | 5 | $mV_{pp}$ |
| | | Switching frequ. | | | 5 | | | 5 | | | 5 | | | 5 | | |
| | | Total incl. spikes | | | 40 | | | 40 | | | 50 | | | 50 | | |
| $\Delta V_{o\,u}$ | Static line regulation with respect to $V_{i\,nom}$ | | $V_{i\,min} - V_{i\,max}$ $I_{o\,nom}$ | | | ±20 | | | [5] | | | ±25 | | | [5] | mV |
| $\Delta V_{o\,l}$ | Static load regulation | | $V_{i\,nom}$ $(0.1 - 1)\,I_{o\,nom}$ | | | -40 | | | [5] | | | -50 | | | [5] | |
| $V_{o\,d}$ | Dynamic load regulation | Voltage deviation [4] | $V_{i\,nom}$ $I_{o1\,nom} \leftrightarrow 0.5\,I_{o1\,nom}$ $0.5\,I_{o2\,nom}$ | ±100 | | | ±150 | | | ±100 | | | ±150 | | | |
| $t_d$ | | Recovery time [4] | | 0.2 | | | | | | 0.2 | | | | | | ms |
| $\alpha_{v\,o}$ | Temperature coefficient of output voltage [6] | | $I_{o\,nom}$ $T_{C\,min} - T_{C\,max}$ | ±0.02 | | | | | | ±0.02 | | | | | | %/K |

*Table 6b: Output data of double-output models. General conditions as per table 5.*

| Model (Nom. output voltage) | | | | AS – LS2660 / 2740 (2 × 24 V / 2 × 25.68 V) [7] | | | | | | Unit |
|---|---|---|---|---|---|---|---|---|---|---|
| Characteristics | | | Conditions | Output 1 | | | Output 2 | | | |
| | | | | min | typ | max | min | typ | max | |
| $V_o$ | Output voltage | | $V_{i\,nom}$, $I_{o1\,nom}$, $I_{o2\,nom}$ | 23.86 [7] | | 24.14 [7] | 23.64 [7] | | 24.36 [7] | V |
| $V_{o\,BR}$ [1] | Output protection (suppressor diode) | | | 28.5/34 [7] | | | 28.5/34 [7] | | | |
| $I_{o\,nom}$ | Output current nom. [2] | | $V_{i\,min} - V_{i\,max}$ $T_{C\,min} - T_{C\,max}$ | 2/1.8 [7] | | | 2/1.8 [7] | | | A |
| $I_{o\,L}$ | Output current limit [9] | | $V_{i\,min} - V_{i\,max}$ | 2.2/2.0 [7] | | | 2.2/2.0 [7] | | | |
| $V_o$ | Output noise [3] | Low frequency [8] | $V_{i\,nom}$, $I_{o\,nom}$ BW = 20 MHz | | | 5 | | | 5 | $mV_{pp}$ |
| | | Switching frequ. | | | 5 | | | 5 | | |
| | | Total incl. spikes | | | 50 | | | 80 | | |
| $\Delta V_{o\,u}$ | Static line regulation with respect to $V_{i\,nom}$ | | $V_{i\,min} - V_{i\,max}$ $I_{o\,nom}$ | | | ±30 | | | [5] | mV |
| $\Delta V_{o\,l}$ | Static load regulation | | $V_{i\,nom}$ $(0.1 - 1)\,I_{o\,nom}$ | | | -60 | | | [5] | |
| $V_{o\,d}$ | Dynamic load regulation | Voltage deviation [4] | $V_{i\,nom}$ $I_{o1\,nom} \leftrightarrow 0.5\,I_{o1\,nom}$ $0.5\,I_{o2\,nom}$ | ±100 | | | ±150 | | | |
| $t_d$ | | Recovery time [4] | | 0.2 | | | | | | ms |
| $\alpha_{v\,o}$ | Temperature coefficient of output voltage [6] | | $I_{o\,nom}$ $T_{C\,min} - T_{C\,max}$ | ±0.02 | | | | | | %/K |

1 Breakdown voltage of the incorporated suppressor diodes (1 mA). Exceeding $V_{o\,BR}$ is dangerous for the suppressor diodes.
2 If the output voltages are increased above $V_{o\,nom}$ via R-input control, option P setting, remote sensing, or option T, the output currents should be reduced accordingly, so that $P_{o\,nom}$ is not exceeded.
3 Measured according to IEC/EN 61204 with a probe annex A
4 See *Dynamic Load Regulation*
5 See *Output Voltage Regulation of Double-Output Models*
6 For battery charger applications, a defined negative temperature coefficient can be provided by using a temperature sensor; see *Accessories*.
7 Especially designed for battery charging using the battery temperature sensor; see *Accessories*. $V_{o1}$ is set to 25.68 V ±1% (R-input open-circuit).
8 LS models only (twice the input frequency)
9 Both outputs connected in series.



Asia-Pacific
+86 755 298 85888
EMEA
+353 61 531 820
North America
+1 866 513 2839
powersupport@belf.com
belfuse.com

© 2025 Bel Fuse Inc. BCD20004-G_AG 29 October 2025

## Thermal Considerations

If a converter is located in free, quasi-stationary air (convection cooling) at the indicated maximum ambient temperature $T_{A\,max}$ (see table *Temperature specifications)* and is operated at its nominal input voltage and output power, the temperature measured at the *Measuring point of case temperature* $T_C$ (see *Mechanical Data*) will approach the indicated value $T_{C\,max}$ after the warm-up phase. However, the relationship between $T_A$ and $T_C$ depends heavily upon the conditions of operation and integration into a system. The thermal conditions are influenced by input voltage, output current, airflow, and temperature of surrounding components and surfaces. $T_{A\,max}$ is therefore, contrary to $T_{C\,max}$, an indicative value only.

**Caution:** The installer must ensure that under all operating conditions $T_C$ remains within the limits stated in the table *Temperature specifications.*

**Notes:** Sufficient forced cooling or an additional heat sink allows $T_A$ to be higher than 71 °C (e.g., 85 °C), as long as $T_{C\,max}$ is not exceeded. Details are specified in fig.7.

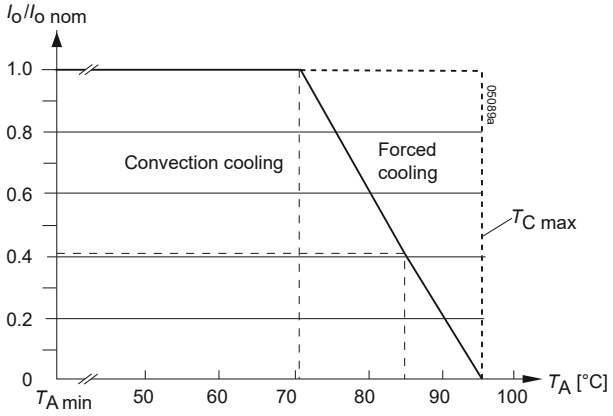


Fig. 7

*Output current derating versus temperature for -7 and -9 models.*

## Thermal Protection

A temperature sensor generates an internal inhibit signal, which disables the outputs, when the case temperature exceeds $T_{C\,max}$. The outputs automatically recover, when the temperature drops below this limit.

Continuous operation under simultaneous extreme worst-case conditions of the following three parameters should be avoided: Minimum input voltage, maximum output power, and maximum temperature.

## Output Protection

Each output is protected against overvoltages, which could occur due to a failure of the internal control circuit. Voltage suppressor diodes (which under worst case condition may become a short circuit) provide the required protection. The suppressor diodes are not designed to withstand externally applied overvoltages. Overload at any of the outputs will cause a shut-down of all outputs. A red LED indicates the overload condition.

**Note:** $V_{o\,BR}$ is specified in *Electrical Output Data*. If this voltage is exceeded, the suppressor diode generates losses and may become a short circuit.

## Parallel and Series Connection

Single- or double-output models with equal output voltage can be connected in parallel using option T (current sharing). If the T pins are interconnected, all converters share the output current equally.

Single-output models and/or main and second outputs of double-output models can be connected in series with any other (similar) output.

**Notes:**

– Parallel connection of double-output models should always include both, main and second output to maintain good regulation.

– Not more than 5 converters should be connected in parallel.

– Series connection of second outputs without involving their main outputs should be avoided, as regulation may be poor.

– The maximum output current is limited by the output with the lowest current limitation, if several outputs are connected in series.



Asia-Pacific
+86 755 298 85888
EMEA
+353 61 531 820
North America
+1 866 513 2839
powersupport@belf.com
belfuse.com

© 2025 Bel Fuse Inc. BCD20004-G_AG 29 October 2025

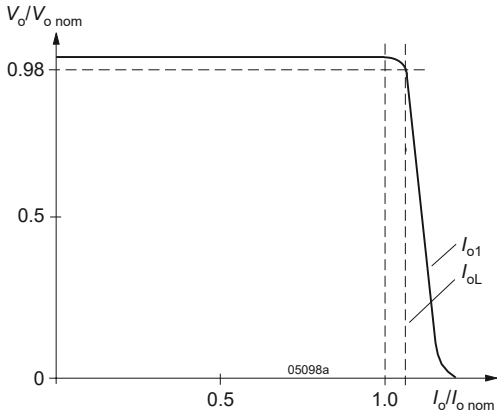


*Fig. 8*
*Output characteristic $V_o$ versus $I_o$ (single-output models or double-output models with parallel-connected outputs).*

## Output Voltage Regulation

Figure 9 applies to single-output or double-output models with parallel-connected outputs.

For independent configuration, output 1 is under normal conditions regulated to $V_{o\,nom}$, irrespective of the output currents.

$V_{o2}$ depends upon the load distribution. If both outputs are loaded with more than 10% of $I_{o\,nom}$, the deviation of $V_{o2}$ remains within ±5% of $V_{o1}$. Fig. 10 to 12 show the regulation depending on load distribution.

Two outputs of a double-output model connected in parallel behave like the output of a single-output model.

**Note:** If output 2 is not used, connect it in parallel with output 1! This ensures good regulation and efficiency.

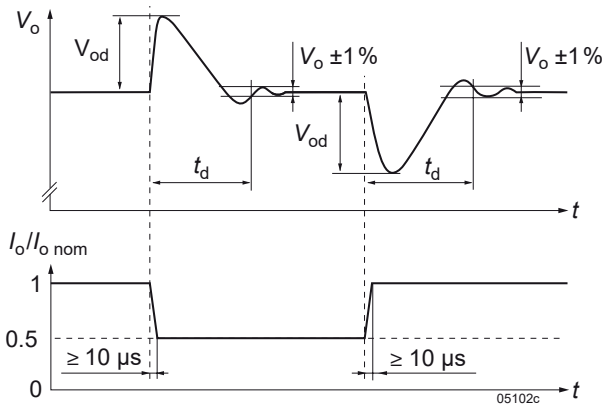


*Fig. 9*
*Typical dynamic load regulation of $V_o$.*

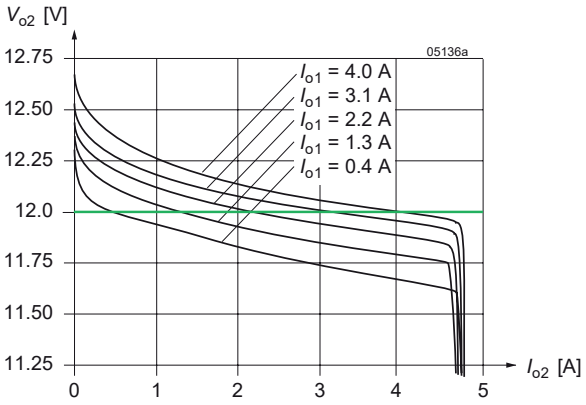


*Fig. 10*
*Models with 2 outputs 12 V: $V_{o2}$ versus $I_{o2}$ with various $I_{o1}$ (typ)*

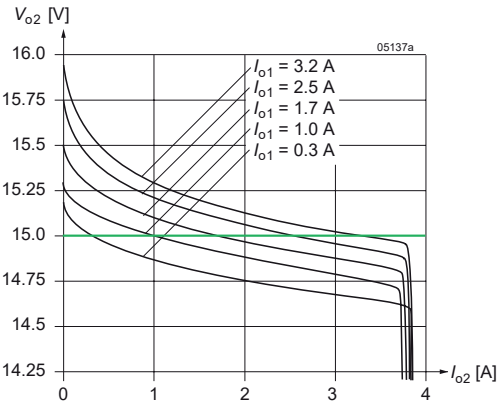


*Fig. 11*
*Models with 2 outputs 15 V: $V_{o2}$ versus $I_{o2}$ with various $I_{o1}$ (typ)*

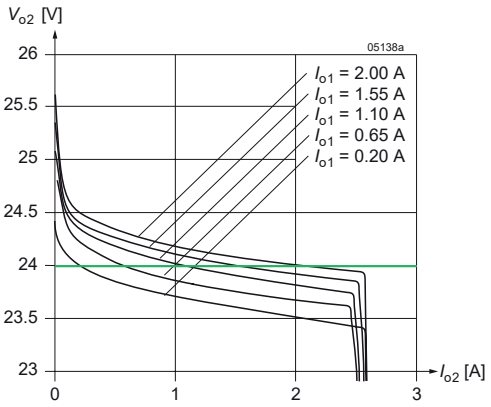


*Fig. 12*
*Models with 2 outputs 24 V: $V_{o2}$ versus $I_{o2}$ with various $I_{o1}$ (typ)*



**Asia-Pacific**
+86 755 298 85888
**EMEA**
+353 61 531 820
**North America**
+1 866 513 2839
powersupport@belf.com
belfuse.com

© 2025 Bel Fuse Inc. BCD20004-G_AG 29 October 2025

## Auxiliary Functions

### Inhibit for Remote On/Off

The outputs may be enabled or disabled by means of a logic signal (TTL, CMOS, etc.) applied between the inhibit input i (pin 18) and pin 14 (S– or Vo1–). In systems with several converters, this feature can be used to control the activation sequence of the converters. If the inhibit function is not required, connect the inhibit pin 18 with pin 14!

**Note:** If pin 18 is not connected, the output is disabled.

*Table 7: Inhibit characteristics*

| Characteristics | | | Conditions | min | typ | max | Unit |
|---|---|---|---|---|---|---|---|
| $V_{inh}$ | Inhibit voltage | $V_o$ = on | $V_{i\,min} - V_{i\,max}$ | -50 | | 0.8 | V |
| | | $V_o$ = off | | 2.4 | | 50 | |
| $I_{inh}$ | Inhibit current | | $V_{inh}$ = 0 | | | -400 | µA |
| $t_r$ | Rise time | | | | 30 | | ms |
| $t_f$ | Fall time | | Depending on $I_o$ | | | | |

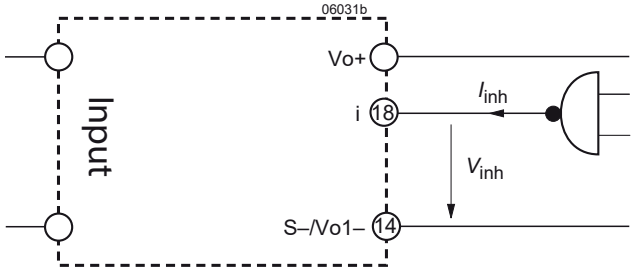


*Fig. 13*
*Definition of $V_{inh}$ and $I_{inh}$.*

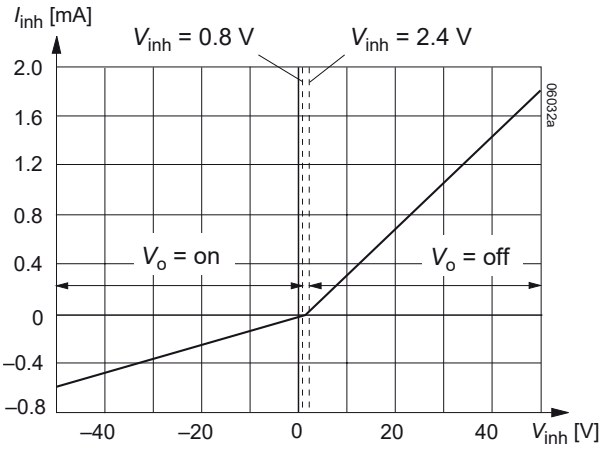


*Fig. 14*
*Typical inhibit current $I_{inh}$ versus inhibit voltage $V_{inh}$*

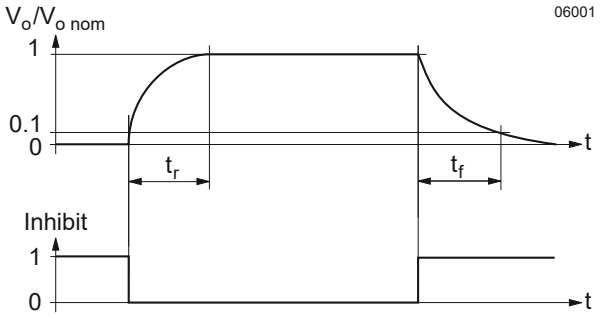


*Fig. 15*
*Output response as a function of inhibit control*

### **Sense Lines** (Single-Output Models)

**Important:** Sense lines must always be connected! Incorrectly connected sense lines may activate the overvoltage protection resulting in a permanent short-circuit of the output.

This feature allows for compensation of voltage drops across the connector contacts and if necessary, across the load lines. We recommend connecting the sense lines directly at the female connector.

To ensure correct operation, both sense lines (S+, S–) should be connected to their respective power outputs (Vo+ and Vo–), and the voltage difference between any sense line and its respective power output (as measured on the connector) should not exceed the following values:

*Table 7: Maximum voltage compensation allowed using sense lines*

| Output voltage | Total voltage difference between sense lines and their respective outputs | Voltage difference between Vo– and S– |
|---|---|---|
| 5.1 V | < 0.5 V | < 0.25 V |
| 12 V, 15 V, 24 V | < 1.0 V | < 0.25 V |


© 2025 Bel Fuse Inc. BCD20004-G_AG 29 October 2025

### **Programmable Output Voltage** (R-Function)

As a standard feature, the converters offer an adjustable output voltage, identified by letter R in the type designation. The control input R (pin 16) accepts either a control voltage $V_{ext}$ or a resistor $R_{ext}$ to adjust the desired output voltage. When input R is not connected, the output voltage is set to $V_{o\,nom}$.

a) Adjustment by means of an **external control voltage $V_{ext}$** between pin 16 (R) and pin 14 (S–):

The control voltage range is 0 – 2.75 VDC and allows for an adjustment in the range of approximately 0 – 110% of $V_{o\,nom}$.

$$V_{ext} \approx \frac{V_o}{V_{o\,nom}} \bullet 2.5\ V$$

b) Adjustment by means of an **external resistor**:

Depending upon the value of the required output voltage, the resistor shall be connected

**either:** Between pin 16 and pin 14 to achieve an output voltage adjustment range of approximately 0 – 100% of $V_{o\,nom}$.

**or:** Between pin 16 and pin 12 to achieve an output voltage adjustment range of 100 – 110% of $V_{o\,nom}$.

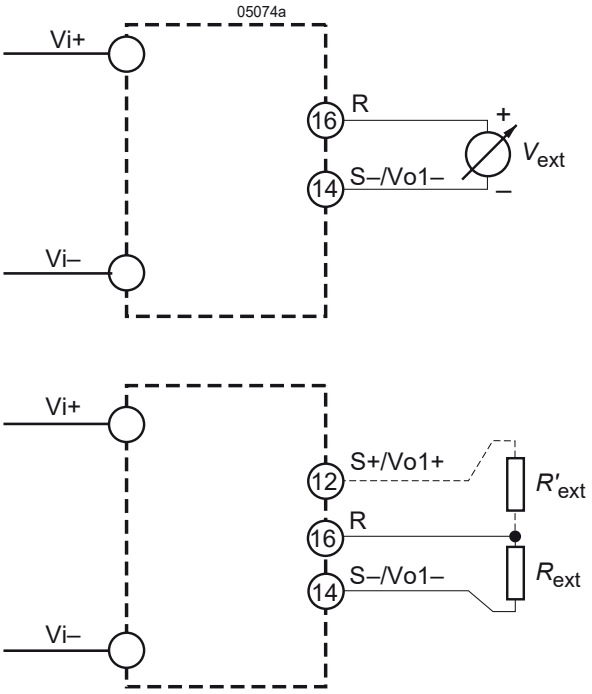


*Fig. 16*
*Output voltage control for single-output models*

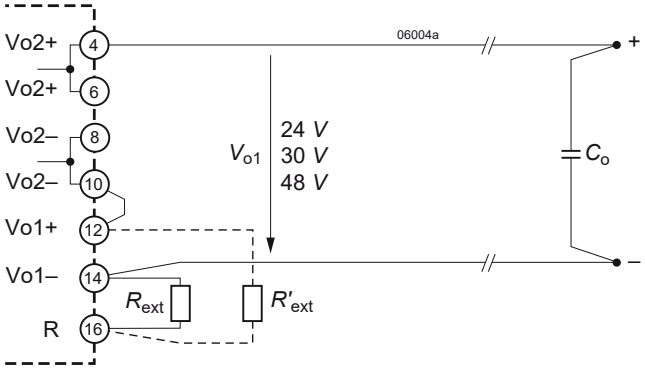


*Fig. 17*
*Double-output models:*
*Wiring of the R-input for output voltages 24 V, 30 V, or 48 V with both outputs in series. A ceramic capacitor ($C_o$) across the load*

**Warnings:**

– $V_{ext}$ shall never exceed 2.75 VDC.

– The value of $R'_{ext}$ shall never be less than the lowest value as indicated in table $R'_{ext}$ (for $V_0 > V_{0\,nom}$) to avoid damage to the converter!

**Notes**:

– The R-Function excludes option P (output voltage adjustment by potentiometer).

If the output voltages are increased above $V_{o\,nom}$ via R-input control, option P setting, remote sensing, or option T, the output currents should be reduced, so that $P_{o\,nom}$ is not exceeded.

– With double-output models, the second output follows the voltage of the controlled main output.

– In case of parallel connection the output voltages should be individually set within a tolerance of 1 – 2%.

### Test Sockets

Test sockets (pin diameter 2 mm) for measuring the main output voltage $V_o$ or $V_{o1}$ are located at the front of the converter. The positive test socket is protected by a series resistor (see: *Functional Description, block diagrams*).

The voltage measured at the test jacks is slightly lower than the value at the output terminals.



**Asia-Pacific**
+86 755 298 85888
**EMEA**
+353 61 531 820
**North America**
+1 866 513 2839
powersupport@belf.com
belfuse.com

© 2025 Bel Fuse Inc. BCD20004-G_AG 29 October 2025

*Table 8a: $R_{ext}$ for $V_o < V_{o\,nom}$; approximate values ($V_{i\,nom}$, $I_{o\,nom}$, series E 96 resistors); $R'_{ext}$ = not fitted*

| $V_{o\,nom}$ = 5.1 V | | $V_{o\,nom}$ = 12 V | | | $V_{o\,nom}$ = 15 V | | | $V_{o\,nom}$ = 24 V | | |
|---|---|---|---|---|---|---|---|---|---|---|
| $V_o$ [V] | $R_{ext}$ [kΩ] | $V_o$ [V] [1] | | $R_{ext}$ [kΩ] | $V_o$ [V] [1] | | $R_{ext}$ [kΩ] | $V_o$ [V] [1] | | $R_{ext}$ [kΩ] |
| 0.5 | 0.432 | 2 | 4 | 0.806 | 2 | 4 | 0.619 | 4 | 8 | 0.81 |
| 1.0 | 0.976 | 3 | 6 | 1.33 | 4 | 8 | 1.47 | 6 | 12 | 1.33 |
| 1.5 | 1.65 | 4 | 8 | 2 | 6 | 12 | 2.67 | 8 | 16 | 2.0 |
| 2.0 | 2.61 | 5 | 10 | 2.87 | 8 | 16 | 4.53 | 10 | 20 | 2.87 |
| 2.5 | 3.83 | 6 | 12 | 4.02 | 9 | 18 | 6.04 | 12 | 24 | 4.02 |
| 3.0 | 5.76 | 7 | 14 | 5.62 | 10 | 20 | 8.06 | 14 | 28 | 5.62 |
| 3.5 | 8.66 | 8 | 16 | 8.06 | 11 | 22 | 11 | 16 | 32 | 8.06 |
| 4.0 | 14.7 | 9 | 18 | 12.1 | 12 | 24 | 16.2 | 18 | 36 | 12.1 |
| 4.5 | 30.1 | 10 | 20 | 20 | 13 | 26 | 26.1 | 20 | 40 | 20 |
| 5.0 | 200 | 11 | 22 | 42.2 | 14 | 28 | 56.2 | 22 | 44 | 44.2 |

*Table 8b: $R'_{ext}$ for $V_o > V_{o\,nom}$; approximate values ($V_{i\,nom}$, $I_{o\,nom}$, series E 96 resistors); $R_{ext}$ = not fitted*

| $V_{o\,nom}$ = 5.1 V | | $V_{o\,nom}$ = 12 V | | | $V_{o\,nom}$ = 15 V | | | $V_{o\,nom}$ = 24 V | | |
|---|---|---|---|---|---|---|---|---|---|---|
| $V_o$ [V] | $R'_{ext}$ [kΩ] | $V_o$ [V] [1] | | $R'_{ext}$ [kΩ] | $V_o$ [V] [1] | | $R'_{ext}$ [kΩ] | $V_o$ [V] [1] | | $R'_{ext}$ [kΩ] |
| 5.15 | 432 | 12.1 | 24.2 | 1820 | 15.2 | 30.4 | 1500 | 24.25 | 48.5 | 3320 |
| 5.20 | 215 | 12.2 | 24.4 | 931 | 15.4 | 30.8 | 768 | 24.50 | 49.0 | 1690 |
| 5.25 | 147 | 12.3 | 24.6 | 619 | 15.6 | 31.2 | 523 | 24.75 | 49.5 | 1130 |
| 5.30 | 110 | 12.4 | 24.8 | 475 | 15.8 | 31.6 | 392 | 25.00 | 50.0 | 845 |
| 5.35 | 88.7 | 12.5 | 25.0 | 383 | 16.0 | 32.0 | 316 | 25.25 | 50.5 | 698 |
| 5.40 | 75 | 12.6 | 25.2 | 316 | 16.2 | 32.4 | 267 | 25.50 | 51.0 | 590 |
| 5.45 | 64.9 | 12.7 | 25.4 | 274 | 16.4 | 32.8 | 232 | 25.75 | 51.5 | 511 |
| 5.50 | 57.6 | 12.8 | 25.6 | 243 | 16.5 | 33.0 | 221 | 26.00 | 52.0 | 442 |
| | | 13.0 | 26.0 | 196 | | | | 26.25 | 52.5 | 402 |
| | | 13.2 | 26.4 | 169 | | | | 26.40 | 52.8 | 383 |

[1] First column: $V_o$ or $V_{o1}$; second column: double-output models with series-connected outputs

## Display Status of LEDs

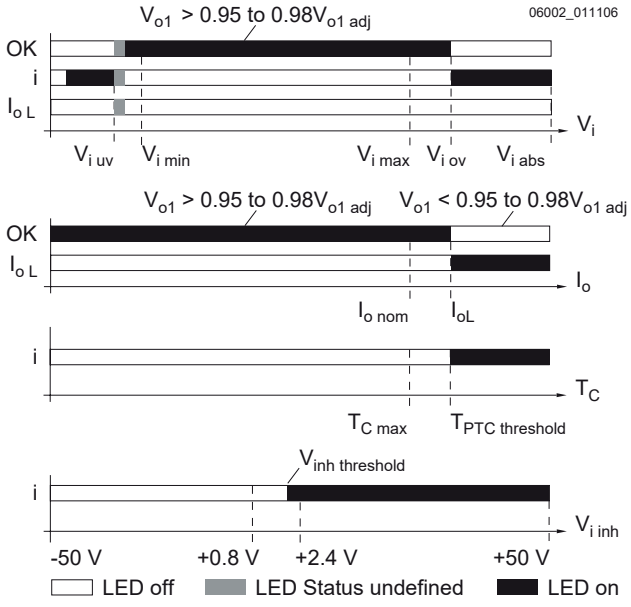


*Fig. 18*
*LED indicators*

*LEDs "OK", "i" and "$I_{o\,L}$" status versus input voltage*
*Conditions: $I_o \le I_{o\,nom}$, $T_C \le T_{C\,max}$, $V_{inh} \le 0.8$ V*
*$V_{i\,uv}$ = undervoltage lock-out, $V_{i\,ov}$ = overvoltage lock-out*

*LEDs "OK" and "$I_{o\,L}$" status versus output current*
*Conditions: $V_{i\,min} - V_{i\,max}$, $T_C \le T_{C\,max}$, $V_{inh} \le 0.8$ V*

*LED "i" versus case temperature*
*Conditions: $V_{i\,min} - V_{i\,max}$, $I_o \le I_{o\,nom}$, $V_{inh} \le 0.8$ V*

*LED "i" versus $V_{inh}$*
*Conditions: $V_{i\,min} - V_{i\,max}$, $I_o \le I_{o\,nom}$, $T_C \le T_{C\,max}$*


© 2025 Bel Fuse Inc. BCD20004-G_AG 29 October 2025

### Battery Charging / Temperature Sensor

All converters with an R-input are suitable for battery charger applications, but we recommend choosing the models especially designed for this application DS/LS1740 or DS/LS2740; see *Model Selection*.

For optimal battery charging and life expectancy of the battery an external temperature sensor can be connected to the R-input. The sensor is mounted as close as possible to the battery and adjusts the output voltage according to the battery temperature.

Depending upon cell voltage and the temperature coefficient of the battery, different sensor types are available, see *Accessories*.

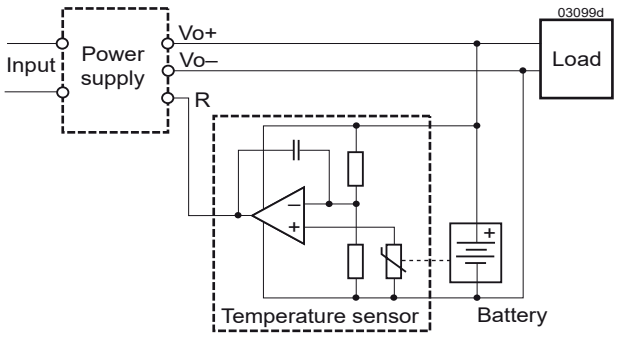


*Fig. 19*
*Connection of a temperature sensor*

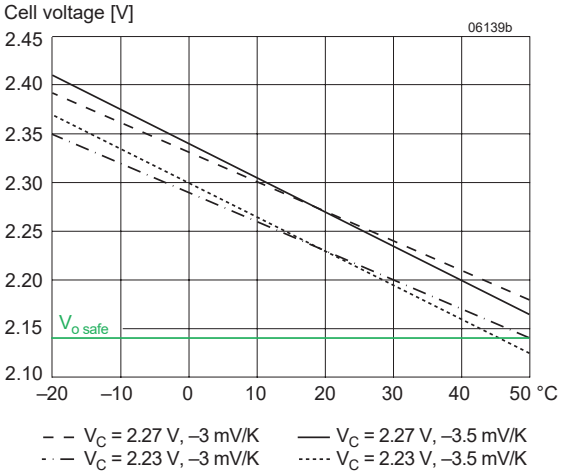


*Fig. 20*
*Trickle charge voltage versus temperature for defined temp. coefficient. $V_{o\,nom}$ is the output voltage with open R-input.*


© 2025 Bel Fuse Inc. BCD20004-G_AG 29 October 2025

## Electromagnetic Compatibility (EMC)

A metal oxide VDR together with the input fuse and an input filter form an effective protection against high input transient voltages, which typically occur in most installations. The converters have been successfully tested to the following specifications:

### Electromagnetic Immunity

*Table 9: Electromagnetic immunity (type tests)*

| Phenomenon | Standard | Level | Coupling mode [1] | Value applied | Waveform | Source imped. | Test procedure | In oper. | Perf. crit. [2] |
|---|---|---|---|---|---|---|---|---|---|
| Supply related surge | RIA 12 [3] | A [4] | +i/–i | 3.5 $V_{Bat}$ | 2/20/2 ms | 0.2 Ω | 1 positive surge | yes | A |
| | | B | | 1.5 $V_{Bat}$ | 0.1/1/0.1 s | | | | |
| Direct transients | | C | +i/–i, –i/c | 960 $V_p$ | 10/100 µs | 5 Ω | 5 pos. & 5 neg. | yes | B |
| | | D [3] | | 1800 $V_p$ | 5/50 µs | | | | |
| | | E | | 3600 $V_p$ | 0.5/5 µs | 100 Ω | | | |
| | | F | | 4800 $V_p$ | 0.1/1 µs | | | | |
| | | G [3] | | 8400 $V_p$ | 0.05/0.1 µs | | | | |
| Indirect couples transients | | H | +o/c, –o/c | 1800 $V_p$ | 5/50 µs | | | | |
| | | J | | 3600 $V_p$ | 0.5/5 µs | | | | |
| | | K | | 4800 $V_p$ | 0.1/1 µs | | | | |
| | | L | | 8400 $V_p$ | 0.05/0.1 µs | | | | |
| Electrostatic discharge (to case) | IEC/EN 61000-4-2 | 4 [5] | contact discharge | ±8000 $V_p$ | 1/50 ns | 330 Ω 150 pF | 10 pos. & 10 neg. discharges | yes | A |
| | | | air discharge | ±15000 $V_p$ | | | | | |
| Electromagnetic field | IEC/EN 61000-4-3 | x [6] | antenna | 20 V/m | AM 80% / 1 kHz | N/A | 80 – 1000 MHz | yes | A |
| | | [7] | antenna | 20 V/m | AM 80% / 1 kHz | N/A | 800 – 1000 MHz | yes | A |
| | | | | 10 V/m | | | 1400 – 2000 MHz | | |
| | | | | 5 V/m | | | 2000 – 2500 MHz | | |
| | | | | 3 V/m | | | 5100 – 6000 MHz | | |
| Electrical fast transients / burst | IEC/EN 61000-4-4 | 3 | capacitive, o/c | ±2000 $V_p$ | bursts of 5/50 ns; 2.5 / 5 kHz over 15 ms; burst period: 300 ms | 50 Ω | 60 s positive 60 s negative transients per coupling mode | yes | A |
| | | 4 [8] | ±i/c, +i/–i direct | ±4000 $V_p$ | | | | | |
| Surges | IEC/EN 61000-4-5 | 3 [9] | ±i/c | ±2000 $V_p$ | 1.2 / 50 µs | 12 Ω | 5 pos. & 5 neg. surges per coupling mode | yes | A |
| | | | +i/–i | ±1000 $V_p$ | | 2 Ω | | | |
| Conducted disturbances | IEC/EN 61000-4-6 | 3 [10] | i, o, signal wires | 10 VAC (140 dBµV) | AM 80% / 1 kHz | 150 Ω | 0.15 – 80 MHz | yes | A |

[1] i = input, o = output, c = case
[2] A = normal operation, no deviation from specs.; B = temporary loss of function or deviation from specs possible
[3] RIA 12 covers or exceeds IEC 60571-1 and EN 50155:2017. Surge D corresponds to EN 50155:2017, waveform A; surge G corresponds to EN 50155:2001, waveform B
[4] Only met with extended input voltage range of CS (for 48 V battery) and ES (for 110 V battery) model types. Such CS models are available on customer's request. Standard DS models types (on 110 V battery) will shut down during the surge and recover automatically.
[5] Exceeds EN 50121-3-2:2015 table 6.3 and EN 50121-4:2016 table 2.4.
[6] Corresponds to EN 50121-3-2:2015 table 6.1 and exceeds EN 50121-4:2016 table 2.1.
[7] Corresponds to EN 50121-3-2:2015 table 6.2 and EN 50121-4:2016 table 2.2 (compliance with digital communication devices).
[8] Corresponds or exceeds EN 50121-3-2:2015 table 4.2 and EN 50121-4:2016 table 4.2.
[9] Covers or exceeds EN 50121-3-2:2015 table 4.3 and EN 50121-4:2016 table 4.3.
[10] Corresponds to EN 50121-3-2:2015 table 4.1 and EN 50121-4:2016 table 4.1 (radio frequency common mode).


Asia-Pacific +86 755 298 85888
EMEA +353 61 531 820
North America +1 866 513 2839
powersupport@belf.com
belfuse.com
© 2025 Bel Fuse Inc. BCD20004-G_AG 29 October 2025

## Electromagnetic Emissions

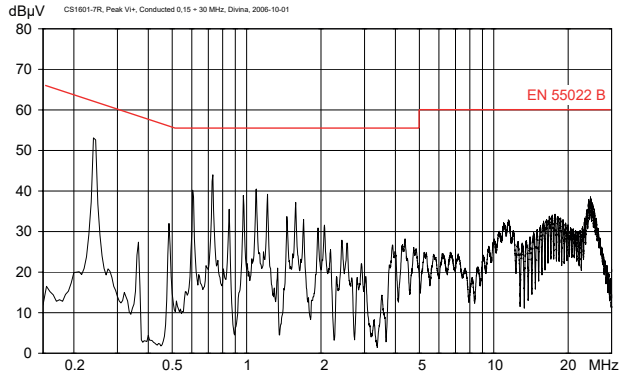


*Fig. 21a*
*Typical conducted emissions (peak) at the positive input according to EN 55011/32, measured at $V_{i\,nom}$ and $I_{o\,nom}$ (CS1601-7R)*

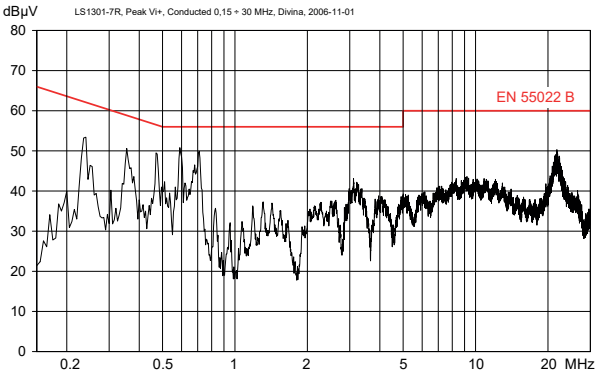


*Fig. 21b*
*Typical conducted emissions (peak) at the positive input according to EN 55011/32, measured at $V_{i\,nom}$ and $I_{o\,nom}$ (LS1301-7R).*

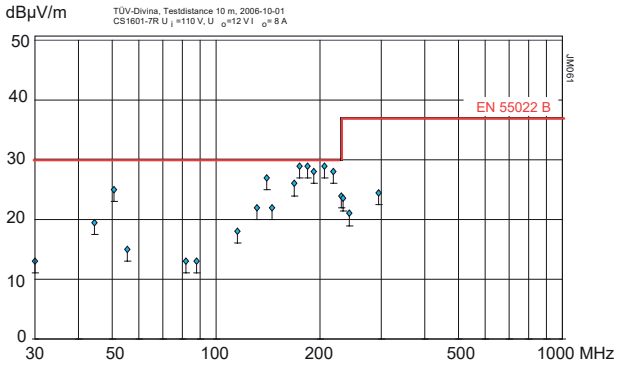


*Fig. 22a*
*Radiated emissions according to EN 55011/32, antenna 10 m distance, measured at $V_{i\,nom}$ and $I_{o\,nom}$ (CS1601-7R)*

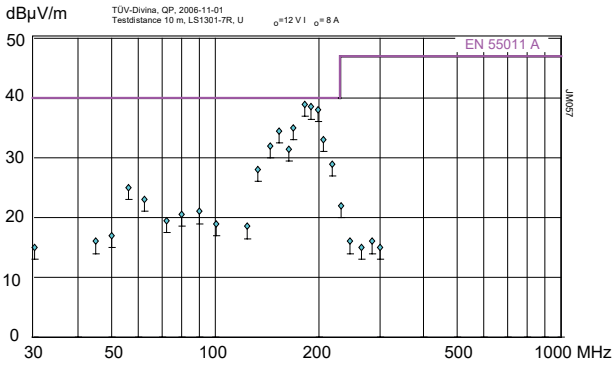


*Fig. 22b*
*Radiated emissions according to EN 55011/32, antenna 10 m distance, measured at $V_{i\,nom}$ and $I_{o\,nom}$ (LS1301-7R)*



**Asia-Pacific**
+86 755 298 85888

**EMEA**
+353 61 531 820

**North America**
+1 866 513 2839

powersupport@belf.com
**belfuse.com**

© 2025 Bel Fuse Inc. BCD20004-G_AG 29 October 2025

## Immunity to Environmental Conditions

*Table 10: Mechanical and climatic stress*

| Test method | | Standard | Test Conditions | | Status |
|---|---|---|---|---|---|
| Cab | Damp heat steady state | IEC/EN 60068-2-78<br>MIL-STD-810D section 507.2 | Temperature:<br>Relative humidity:<br>Duration: | 40 $^{\pm 2}$ °C<br>93 $^{+2/-3}$ %<br>56 days | Converter not operating |
| Kb | Salt mist, cyclic sodium chloride (NaCl) solution | IEC/EN 60068-2-52 | Concentration:<br>Storage:<br>Duration: | 5% (30 °C) for 2 h<br>40 °C, 93% rel. humidity<br>3 cycles of 22 h | Converter not operating |
| Fc | Vibration (sinusoidal) | IEC/EN 60068-2-6<br>MIL-STD-810D section 514.3 | Acceleration amplitude:<br><br>Frequency (1 Oct/min):<br>Test duration: | 0.35 mm (10 – 60 Hz)<br>5 $g_n$ = 49 m/s$^2$ (60 - 2000 Hz)<br>10 – 2000 Hz<br>7.5 h (2.5 h in each axis) | Converter operating |
| Fh | Random vibration broad band (digital control) & guidance | IEC/EN 60068-2-64 | Acceleration spectral density:<br>Frequency band:<br>Acceleration magnitude:<br>Test duration: | 0.05 $g_n^2$/Hz<br>8 – 500 Hz<br>4.9 $g_{n\ rms}$<br>1.5 h (0.5 h in each axis) | Converter operating |
| Ea | Shock (half-sinusoidal) | IEC/EN 60068-2-27<br>MIL-STD-810D section 516.3 | Acceleration amplitude:<br>Bump duration:<br>Number of bumps: | 50 $g_n$ = 490 m/s$^2$<br>11 ms<br>18 (3 in each direction) | Converter operating |
| - | Shock | EN 50155:2007 clause 12.2.11,<br>EN 61373 sect. 10,<br>class B, body mounted [1] | Acceleration amplitude:<br>Bump duration:<br>Number of bumps: | 5.1 $g_n$<br>30 ms<br>18 (3 in each direction) | Converter operating |
| - | Simulated long life testing at increased random vibration levels | EN 50155:2007 clause 12.2.11,<br>EN 61373 sect. 8 and 9,<br>class B, body mounted [1] | Acceleration spectral density:<br>Frequency band:<br>Acceleration magnitude:<br>Test duration: | 0.02 $g_n^2$/Hz<br>5 – 150 Hz<br>0.8 $g_{n\ rms}$<br>15 h (5 h in each axis) | Converter operating |

[1] Body mounted = chassis of a railway coach

### Temperatures

*Table 11: Temperature specifications, valid for an air pressure of 800 – 1200 hPa (800 – 1200 mbar)*

| Model | | | -5 [2] | | -6 [2] | | -7 (option) | | -9 | | Unit |
|---|---|---|---|---|---|---|---|---|---|---|---|
| Characteristics | | Conditions | min | max | min | max | min | max | min | max | |
| $T_A$ | Ambient temperature | Converter operating | - 25 | 50 | - 25 | 60 | - 25 | 71 | - 40 | 71 | ° C |
| $T_C$ | Case temperature [1] | | - 25 | 85 [1] | - 25 | 90 [1] | - 25 | 95 [1] | - 40 | 95 [1] | |
| $T_S$ | Storage temperature | Not operating | - 40 | 85 | - 40 | 85 | - 40 | 85 | - 55 | 85 | |

[1] Overtemperature lockout at $T_C$ > 95 °C
[2] Customer-specific models

### Reliability and Device Hours

*Table 12: MTBF calculated according to MIL-HDBK 217F*

| Ratings at specified case temperature | Model | Ground benign | Ground fixed | | Ground mobile | Unit |
|---|---|---|---|---|---|---|
| | | 40 °C | 40 °C | 70 °C | 50 °C | |
| MTBF [1] | AS – LS | 500 000 | 150 000 | 80 000 | 50 000 | h |
| Device hours [2] | AS – LS | 500 000 | | | | |

[1] Calculated according to MIL-HDBK-217F-N2
[2] Statistic values, based on an average of 4300 working hours per year, over 3 years in general field use.



Asia-Pacific
+86 755 298 85888
EMEA
+353 61 531 820
North America
+1 866 513 2839
powersupport@belf.com
belfuse.com

© 2025 Bel Fuse Inc. BCD20004-G_AG 29 October 2025

## Mechanical Data

Dimensions in mm. The converters are designed to be inserted into a 19” rack, 160 mm long, according to IEC 60297-3.

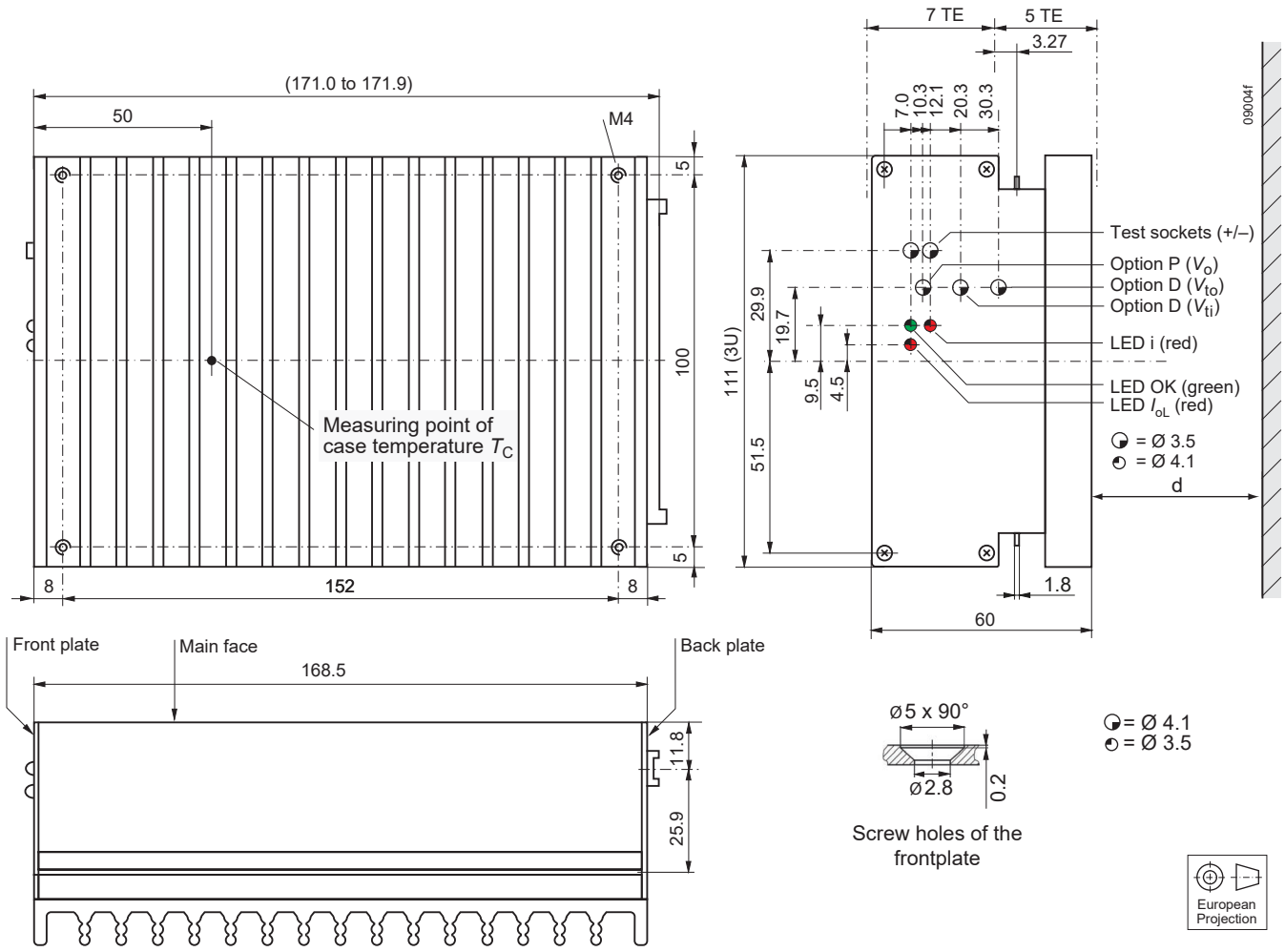


*Fig. 23*
*Aluminum case S02 with heat sink;*
*black finish (EP powder coated);*
*weight approx. 1.25 kg*

**Notes:**

– d ≥ 15 mm, recommended minimum distance to next part in order to ensure proper air circulation at full output power.

– free air location: the converter should be mounted with fins in a vertical position to achieve maximum airflow through the heat sink.



© 2025 Bel Fuse Inc. BCD20004-G_AG 29 October 2025

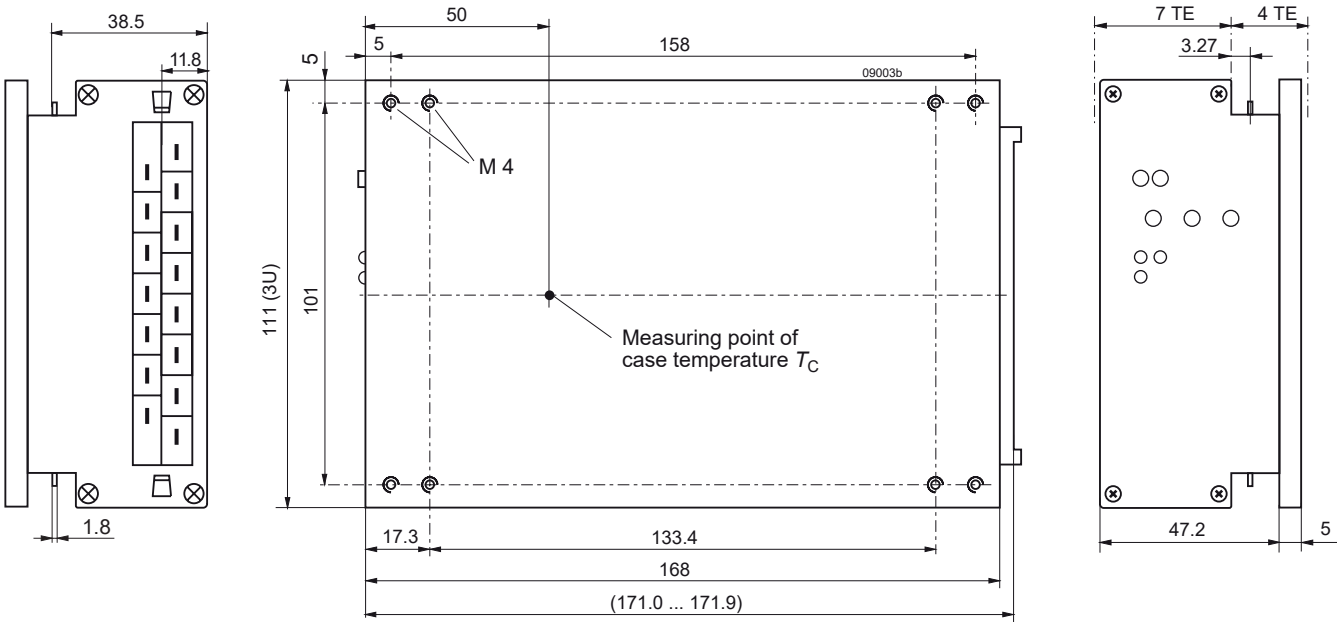


*Fig. 24*
*Option B1: Aluminum case S02 with small cooling plate; black finish (EP powder coated).*
*Suitable for mounting with access from the backside.*
*Total weight approx. 1.2 kg.*

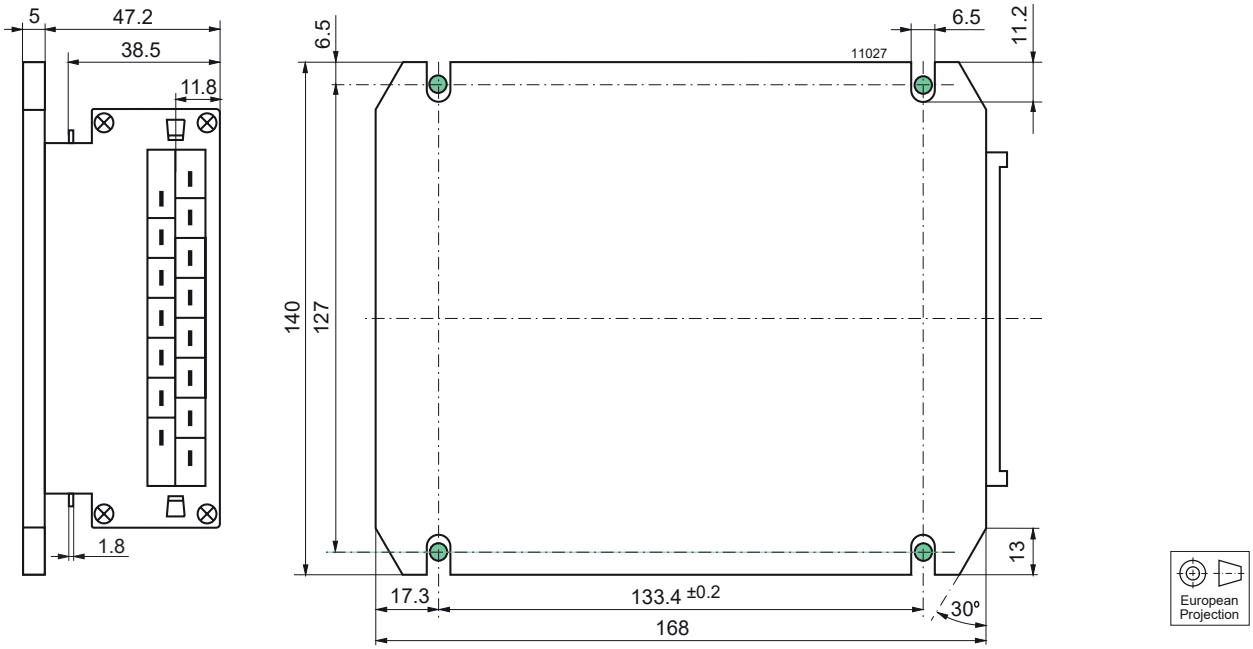


*Fig. 25*
*Option B: Aluminum case S02 with large cooling plate; black finish (EP powder coated).*
*Suitable for front mounting.*
*Total weight approx. 1.3 kg*

**Note:** Long case with option B2, elongated by 60 mm for 220 mm rack depth, is available on request (no LEDs, no test sockets).



**Asia-Pacific**
+86 755 298 85888
**EMEA**
+353 61 531 820
**North America**
+1 866 513 2839
powersupport@belf.com
belfuse.com

© 2025 Bel Fuse Inc. BCD20004-G_AG 29 October 2025

## Safety and Installation Instructions

### Connector Pin Allocation

The connector pin allocation table defines the electrical potentials and the physical pin positions on the H15 connector. The protective earth is connected by a leading pin (no. 24), ensuring that it makes contact with the female connector first.

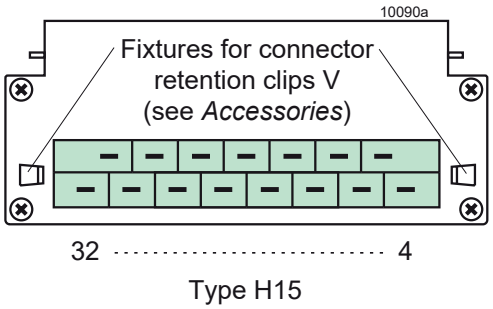


*Fig. 26*
*View of the connector (male contacts)*

*Table 13: H15 connector pin allocation*

| Pin No. | Connector type H15 | | | |
|---|---|---|---|---|
| | single-output models | | double-output models | |
| 4 | Vo+ | Positive Output 1 | Vo2+ | Positive Output 2 |
| 6 | Vo+ | | Vo2+ | |
| 8 | Vo- | Negative Output 1 | Vo2- | Negative Output 2 |
| 10 | Vo- | | Vo2- | |
| 12 | S+ | Positive Sense | Vo1+ | Positive Output 1 |
| 14 | S- | Negative Sense | Vo1- | Negative Output 1 |
| 16 | R [1] | Control of $V_o$ | R [1] | Control of $V_{o1}$ |
| 18 | i | Inhibit | i | Inhibit |
| 20 | D [3] | Save data | D [3] | Save data |
| | V [3] | ACFAIL | | |
| 22 | T [5] | Current sharing | T [5] | Current sharing |
| 24 [2] | ⏚ | Protective earth | ⏚ | Protective earth |
| 26 | Vi+ N≂ [4] | Positive Input | Vi+ N≂ [4] | Positive Input |
| 28 | | Neutral line [4] | | Neutral line [4] |
| 30 | Vi- L≂ [4] | Negative Input | Vi- L≂ [4] | Negative Input |
| 32 | | Phase line [4] | | Phase line [4] |

[1] Not connected, if option P is fitted.
[2] Leading pin (pre-connecting)
[3] Option D excludes option V and vice versa. Pin 20 is not connected, unless option D or V is fitted.
[4] LS models
[5] Only connected, if option T is fitted.

### Installation Instructions

**Note:** These converters have no power factor correction (PFC). The LS4000/5000 models are intended to replace the LS1000 and LS2000 converters in AC applications to comply with IEC/EN 61000-3-2.

The converters are components, intended exclusively for inclusion within other equipment by an industrial assembly operation or by professional installers. Installation must strictly follow the national safety regulations in compliance with the enclosure, mounting, creepage, clearance, casualty, markings, and segregation requirements of the end-use application.

Connection to the system shall be made via the female connector H15; see *Accessories.* Other installation methods may not meet the safety requirements.



Asia-Pacific
+86 755 298 85888
EMEA
+353 61 531 820
North America
+1 866 513 2839
powersupport@belf.com
belfuse.com

© 2025 Bel Fuse Inc. BCD20004-G_AG 29 October 2025

Pin no. 24 (⏚) is connected with the case. For safety reasons it is essential to connect this pin reliably to protective earth.

The input pins 30/32 (Vi– or L≂) are connected via a built-in fuse, which is designed to protect in the case of a converter failure. An additional external fuse, suitable for the application, might be necessary in the wiring to the other input 26/28 (Vi+ or N≂) or even to pins 30/32, particularly if:

- Local requirements demand an individual fuse in each source line
- Phase and neutral of the AC mains are not defined or cannot be assigned to the corresponding terminals.
- Neutral and earth impedance is high or undefined.

**Notes:**

– If the inhibit function is not used, pin no. 18 (i) shall be connected with pin no. 14 to enable the output(s).

– Do not open the converter, or warranty will be invalidated.

– Due to high current values, the converters provide two internally parallel connected contacts for certain paths (pins 4/6, 8/10, 26/28 and 30/32). It is recommended to connect both female connector pins of each path in order to keep the voltage drop low and avoid excessive connector currents.

– If the second output of double-output models is not used, connect it parallel with the main output.

Make sure that there is sufficient airflow available for convection cooling and verify it by measuring the case temperature $T_C$, when the converter is installed and operated in the end-use application; see *Thermal Considerations.*

Ensure that a converter failure (e.g., an internal short-circuit) does not result in a hazardous condition.

## Standards and Approvals

The converters are safety-approved according to the latest edition of IEC/EN 62368-1and UL/CSA 60950-1.

The converters correspond to Class I equipment and have been evaluated for:

- Building-in
- Basic insulation between input and case based on 250 VAC, and double or reinforced insulation between input and output(s)
- Functional insulation between outputs
- Overvoltage category II
- Pollution degree 2 environment
- Max. altitude: 2000 m
- The converters fulfil the requirements of a fire enclosure.

The converters are subject to manufacturing surveillance in accordance with the above mentioned standards and ISO 9001:2015. A CB-scheme is available.

## Railway Applications and Fire Protection

The converters have been designed by observing the railway standards EN 50155, EN 50121-3-2, and EN 50121-4. All boards are coated with a protective lacquer.

The converters with version V108 (or later) comply with NF-F16 (I2/F1). They also comply with EN 45545-1, EN 45545-2 (2016), if installed in a technical compartment or cabinet.

## Protection Degree and Cleaning Liquids

Condition: Female connector fitted to the converter.

- IP 30: All models except those with option P, and except those with option D or V including a potentiometer.
- IP 20: All models fitted with option P, or with option D or V with potentiometer.

In order to avoid damage, any penetration of cleaning fluids has to be prevented, since the power supplies are not hermetically sealed.

## Isolation and Protective Earth

The electric strength test is performed in the factory as routine test according to EN 62911 and IEC/EN 62368-1 and should not be repeated in the field. The company will not honor warranty claims resulting from incorrectly executed electric strength tests.

The resistance of the earth connection to the case (<0.1 Ω) is tested as well.



**Asia-Pacific** +86 755 298 85888
**EMEA** +353 61 531 820
**North America** +1 866 513 2839
powersupport@belf.com
belfuse.com

© 2025 Bel Fuse Inc. BCD20004-G_AG 29 October 2025

*Table 14: Isolation*

| Characteristics | | Input to Case + Output(s) | Output(s) to Case | Output 1 to Output 2 | Unit |
|---|---|---|---|---|---|
| Electric strength test | Factory test 10 s | 2.8 [1] | 1.4 | 0.15 | kVDC |
| | AC test voltage equivalent to factory test | 2.0 [1] | 1.0 | 0.1 | kVAC |
| Insulation resistance at 500 VDC | | >300 | >300 | >100 [2] | MΩ |
| Creepage distances | | ≥ 3.2 [3] | --- | --- | mm |

[1] Subassemblies connecting input to output are pre-tested with 5.6 kVDC or 4 kVAC.
[2] Tested at 150 VDC
[3] Input to outputs: 6.4 mm

## Leakage Currents

Leakage currents flow due to internal leakage capacitances and Y-capacitors. The current values are proportional to the supply voltage and are specified in the table below.

*Table 15: Earth leakage currents for LS models*

| Characteristics | | Class I | Unit |
|---|---|---|---|
| Max. leakage current | Permissible accord. to IEC/EN 62368-1 | 5.0 | mA |
| | Typ. value at 264 V, 50 Hz | 2.1 | |

## LS Models Operated at Greater than 63 Hz

Above 63 Hz, the earth leakage current may exceed 5.0 mA, the maximum value allowed in IEC 62368-1. Frequencies ≥350 Hz are only permitted with $V_i$ ≤200 VAC.

The built-in Y-caps are approved for ≤100 Hz. Safety approvals and CB scheme cover only 50 – 60 Hz.

## Safety of Operator-Accessible Output Circuits

If the output circuit of a **DC-DC converter** is operator-accessible, it shall be an ES1 circuit according to the standard IEC 62368-1.

The following table shows some possible installation configurations, compliance with which causes the output circuit of the converter to be an ES1 circuit according to IEC 62368-1 up to a configured output voltage (sum of nominal voltages if in series or +/– configuration) of 36 V.

However, it is the sole responsibility of the installer to assure the compliance with the applicable safety regulations.

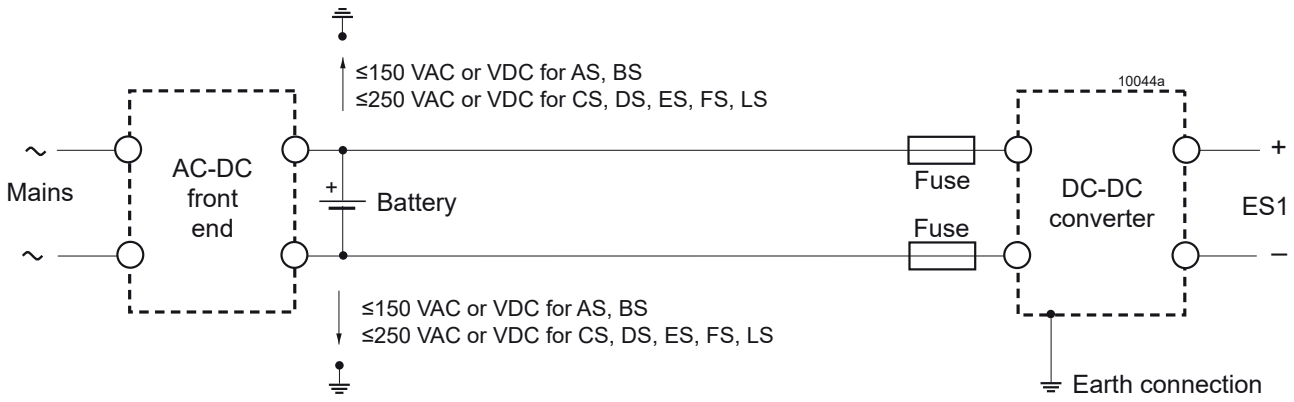


*Fig. 27*
*Schematic safety concept.*
*Use earth connections as per the table below.*


© 2025 Bel Fuse Inc. BCD20004-G_AG 29 October 2025

*Table 16: Safety concept leading to an ES1 output circuit*

| Conditions | Front end | | | DC-DC converter | | Result |
|---|---|---|---|---|---|---|
| Nominal supply voltage | Minimum required grade of insulation, to be provided by the AC-DC front end, including mains supplied battery charger | Nominal DC output voltage from the front end | Minimum required safety status of the front end output circuit | Types | Measures to achieve the specified safety status of the output circuit | Safety status of the DC-DC converter output circuit |
| Mains ≤150 VAC | Functional (i.e. there is no need for electrical insulation between the mains supply voltage and the DC-DC converter input voltage) | ≤ 100 V (The nominal voltage between any input pin and earth can be up to 150 VAC or DC) | Primary circuit | AS BS | Double or reinforced insulation, based on the mains voltage and [2] (provided by the DC-DC converter) and earthed case [3] | ES1 circuit |
| Mains ≤ 250 VAC | | ≤ 400 V (The nominal voltage between any input pin and earth can be up to 250 VAC or 400 VDC) | | CS DS ES FS | | |
| | Basic | ≤ 400 V | Unearthed hazardous voltage secondary circuit | AS BS CS DS ES FS | Supplementary insulation, based on 250 VAC and double or reinforced insulation [2] (provided by DC-DC converter) and earthed case [3]. | |
| | | | Earthed hazardous voltage secondary circuit | | Double or reinforced insulation [2] (provided by the DC-DC converter) earthed case [3] | |
| | Double or reinforced | ≤ 60 V | ES1 circuit | | Functional insulation (provided by the DC-DC converter) earthed case [4] | |
| | | ≤ 120 V | TNV-3 circuit | | Basic insulation (provided by the DC-DC converter) [4] | |

[1] The front end output voltage should match the specified input voltage range of the DC-DC converter.
[2] Based on the maximum nominal output voltage from the front end.
[3] The earth connection has to be provided by the installer according to the relevant safety standard, e.g. IEC/EN 62368-1.
[4] Earthing of the case is recommended, but not mandatory.

If the output circuit of an **AC-DC converter** is operator-accessible, it shall be an ES1 circuit accord. to IEC 62368-1.

The following table shows some possible installation configurations, compliance with which causes the output circuit of **LS models** to be ES1 according to IEC 62368-1 up to a configured output voltage (sum of nominal voltages if in series or +/– configuration) of 36 V.

If the LS converter is used as DC-DC converter, refer to the previous section.

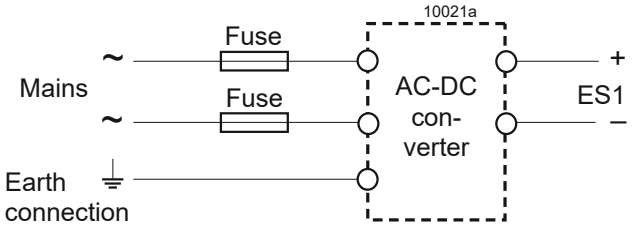


*Fig. 28*
*Schematic safety concept. Use earth connection as per table 17. Use fuses if required by the application; see also Install. Instructions.*

*Table 17: Safety concept leading to an ES1 output circuit*

| Conditions | AC-DC converter | Installation | Result |
|---|---|---|---|
| Nominal voltage | Grade of insulation between input and output provided by the AC-DC converter | Measures to achieve the resulting safety status of the output circuit | Safety status of the AC-DC converter output circuit |
| Mains ≤ 250 VAC | Double or reinforced | Earthed case[1] and installation according to the applicable standards | ES1 circuit |

[1] The earth connection has to be provided by the installer according to the relevant safety standards, e.g. IEC/EN 62368-1.



Asia-Pacific
+86 755 298 85888
EMEA
+353 61 531 820
North America
+1 866 513 2839
powersupport@belf.com
belfuse.com

© 2025 Bel Fuse Inc. BCD20004-G_AG 29 October 2025

## Description of Options

*Table 18: Survey of options*

| Option | Function of option | Characteristics |
|---|---|---|
| - 7 | Extended operational ambient temperature range | $T_A$ = – 25 to 71 °C |
| E | Electronic inrush current limitation circuitry | Active inrush current limitation |
| P [2] | Potentiometer for fine adjustment of output voltage | Adjustment range +10/– 60% of $V_{o\,nom}$, excludes R-input |
| D [1] | Input and/or output undervoltage monitoring circuitry | Safe data signal output (D0 – DD) |
| V [1] | Input and/or output undervoltage monitoring circuitry | ACFAIL signal according to VME specifications (V0, V2, V3) |
| T | Current sharing | Interconnect T-pins for parallel connection (max 5 converters) |
| B, B1, B2 | Cooling plate (160 or 220 mm long) | Replaces the standard heat sink, allowing direct chassis-mounting |
| non-G | RoHS-compliant for 5 substances | Tin-lead solder |

[1] Option D excludes option V and vice versa; option V only for 5.1 V outputs.
[2] Option P is not available for battery charger models.

### -7 Temperature Range

Option -7 designates converters with an operational ambient temperature range of –25 to 71 °C. Not for new designs.

### E Inrush Current Limitation

CS/DS/ES/FS/LS models may be supplemented by an electronic circuit (option E) replacing the standard built-in NTC resistor) in order to achieve an enhanced inrush current limiting function. Option E is not available with AS/BS models, but mandatory for all CS/DS/ES/FS/LS models with option -9.

The figure below shows two consecutive peaks of the inrush current, the first one is caused by $V_i/R_v$ and the second one by the rising current across the FET. The shape of the curve depends on model, but the tables below show the higher of both peaks.

CS models fitted with option E and option D6 (input voltage monitor) meet the standard ETS 300132-2 for 48 VDC supplies. Option D6 is necessary to disable the converter at low input voltage, such avoiding an excessive input current. Connect output D (pin 20) with inhibit (pin 18).

Option D6 should be adjusted with the potentiometer to a threshold of 36 – 40.5 V for 48 V batteries and to 44 – 50 V for 60 V batteries. Refer also to the description of option D.

**Note:** Subsequent switch-on cycles at start-up are limited to max. 10 cycles during the first 20 seconds (cold converter) and then to max. 1 cycle every 8 s.

LS models powered by 230 VAC / 50 Hz exhibit an inrush current as per the fig. below, when switched on at the peak of $V_i$. In this case, the inrush current $I_{inr\,p}$ is 21.7 A and its duration $t_{inr}$ is 5 ms. This is the worst case.

If the LS converter is switched on in a different moment, $I_{inr\,p}$ is much lower, but $t_{inr}$ rises up to 10 ms.

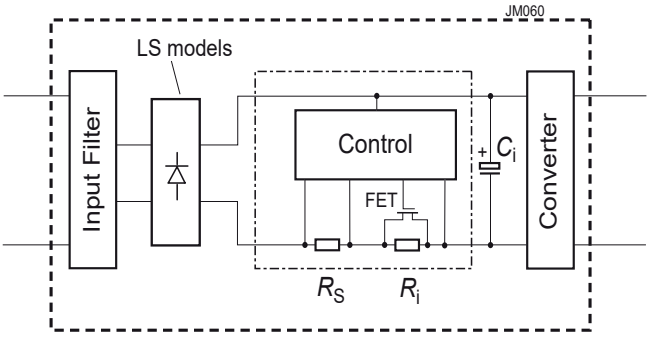


*Fig. 29*
*Block diagram of option E*
*Current limiting resistance $R_v = R_S + R_i = 15\ \Omega$*

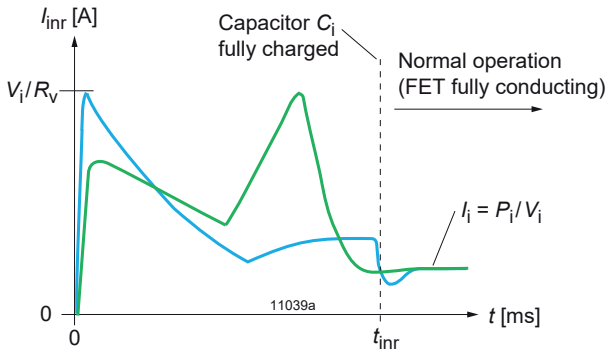


*Fig. 30*
*Inrush current with option E (DC supply)*
*2 different wafe shapes depending on model*


© 2025 Bel Fuse Inc. BCD20004-G_AG 29 October 2025

*Table 19a: Inrush current at $V_{i\,nom}$ (DC supply) and $I_{o\,nom}$*

| Characteristics | | FS | CS | DS | ES | LS | Unit |
|---|---|---|---|---|---|---|---|
| $V_{o\,nom}$ | Input voltage | 50 | 60 | 110 | 220 | 310 | V |
| $I_{inr\,p}$ | Peak inrush current | 7.5 | 6.5 | 7.4 | 14.6 | 21 | A |
| $t_{inr}$ | Inrush current duration | 20 | 25 | 14 | 16 | 12 | ms |

*Table 19b: Inrush current at $V_{i\,max}$ (DC supply) and $I_{o\,nom}$*

| Characteristics | | FS | CS | DS | ES | LS | Unit |
|---|---|---|---|---|---|---|---|
| $V_{o\,max}$ | Input voltage | 100 | 140 | 220 | 385 | 372 | V |
| $I_{inr\,p}$ | Peak inrush current | 10 | 9 | 14.5 | 25.7 | 24.8 | A |
| $t_{inr}$ | Inrush current duration | 26 | 30 | 14 | 12 | 16 | ms |

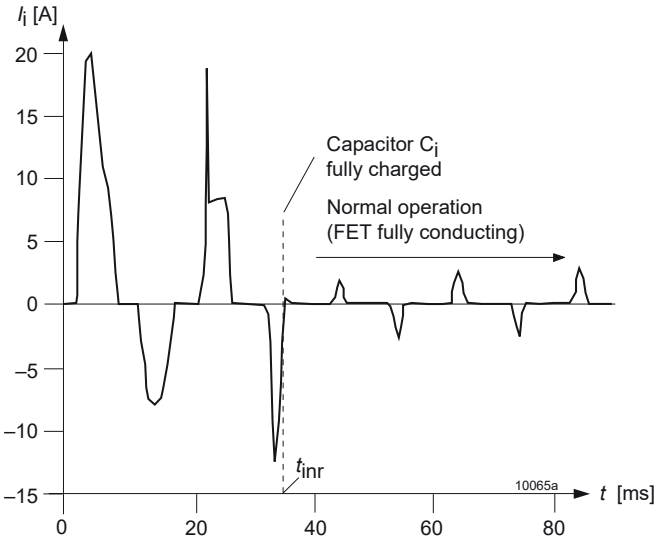


*Fig. 31*
*Inrush current for LS models with option E (AC supply), $V_i$ = 230 VAC, $f_i$ = 50 Hz, $P_o = P_{o\,nom}$*

## P Potentiometer

A potentiometer provides an output voltage adjustment range of +10/–60% of $V_{o\,nom}$. It is accessible through a hole in the front cover. Option P is not available for battery charger models and is not recommended for converters connected in parallel.

Option P excludes the R-function. With double-output models, both outputs are influenced by the potentiometer setting (doubling the voltage, if the outputs are in series).

**Note**: If the output voltages are increased above $V_{o\,nom}$ via R input control, option P setting, remote sensing, or option T, the output current(s) should be reduced, so that $P_{o\,nom}$ is not exceeded.

## T Current Sharing

This option ensures that the output currents are approximately shared between all parallel-connected converters, hence increasing system reliability. To use this facility, simply interconnect the T pins of all converters and make sure that the reference for the T signal, pin 14 (S– or Vo1–), are also connected together. The load lines should have equal length and cross section to ensure equal voltage drops.

Not more than 5 converters should be connected in parallel. The R pins should be left open-circuit. If not, the output voltages must be individually adjusted prior to paralleling within 1 to 2% or the R pins should be connected together.

**Note:** Parallel connection of converters with option P is not recommended.



Asia-Pacific
+86 755 298 85888
EMEA
+353 61 531 820
North America
+1 866 513 2839
powersupport@belf.com
belfuse.com

© 2025 Bel Fuse Inc. BCD20004-G_AG 29 October 2025

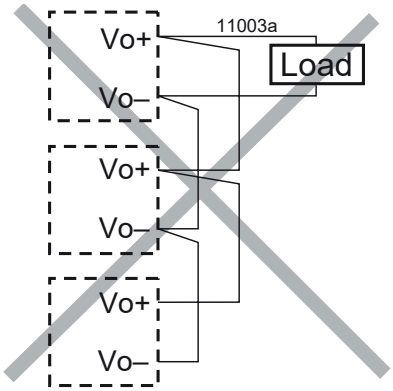


*Fig.32*
*Example of poor wiring for parallel connection (unequal length of load lines)*

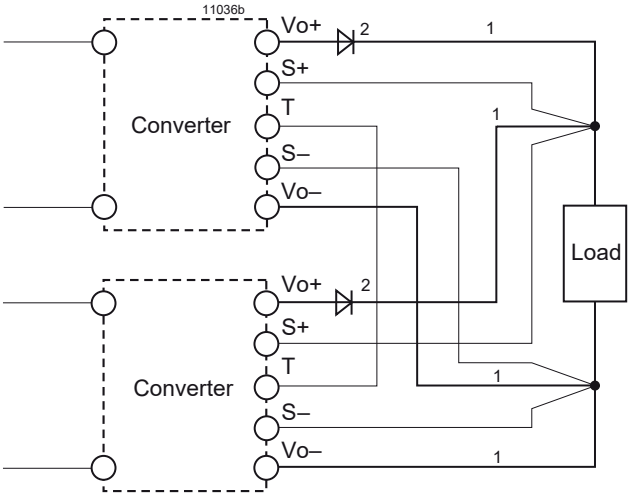


Max. 5 converters in parallel connection

[1] Lead lines should have equal length and cross section, and should run in the same cable loom.
[2] Diodes recommended in redundant operation only

*Fig. 33*
*Parallel connection of single-output models using option T with the sense lines connected at the load*

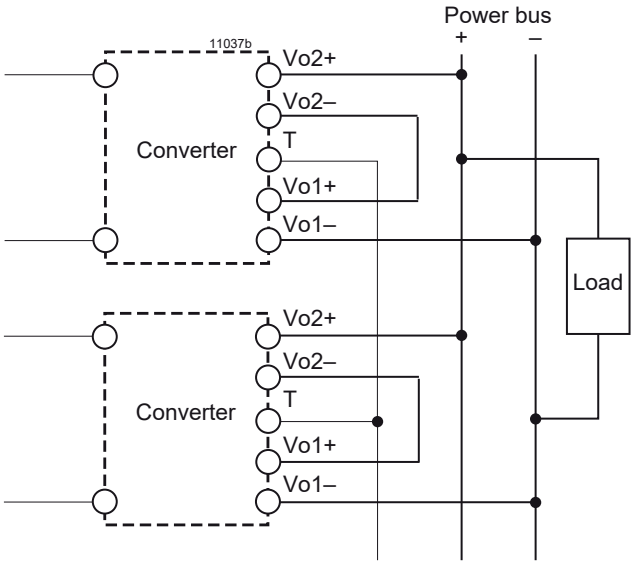


Max. 5 converters in parallel connection

*Fig. 34*
*Parallel connection of double-output models with the outputs connected in series, using option T.*
*The signal at the T pins is referenced to Vo1–.*

## D Undervoltage Monitor

The input and/or output undervoltage monitor operates independently of the built-in input undervoltage lockout circuit. A logic “low” signal (output with self-conducting JFET) or “high” signal (NPN open-collector output) is generated at the D output (pin 20), when one of the monitored voltages drops below the preselected threshold level $V_t$. This signal is referenced to S–/Vo1–. The D output recovers, when the monitored voltages exceed $V_t + V_h$. The threshold levels $V_{ti}$ and $V_{to}$ are either adjusted by a potentiometer, accessible through a hole in the front cover, or adjusted in the factory to a fixed value specified by the customer.

Option D exists in various versions D0 – DD, as shown in table 21. D0 and D9 are adjusted according to customer’s request and receive a customer-specific model number.



Asia-Pacific
+86 755 298 85888
EMEA
+353 61 531 820
North America
+1 866 513 2839
powersupport@belf.com
belfuse.com

© 2025 Bel Fuse Inc. BCD20004-G_AG 29 October 2025

| Output type | | Monitoring | | Minimum adjustment range of threshold level $V_t$ | | Typ. hysteresis $V_{ho}$ [% of $V_t$] for $V_{t\,min} - V_{t\,max}$ | | Number of potentiometers |
|---|---|---|---|---|---|---|---|---|
| JFET | NPN | $V_i$ | $V_o$ or $V_{o1}$ | $V_{ti}$ | $V_{to}$ | $V_{hi}$ | $V_{ho}$ | |
| D1 | D5 | no | yes | --- | 3.5 V – $V_{o\,BR}$ [1] | --- | 2.5 – 0.6 V | 1 |
| D2 | D6 | yes | no | $V_{i\,min} - V_{i\,max}$ [1] | --- | 3.4 – 0.4 V | --- | 1 |
| D3 | D7 | yes | yes | $V_{i\,min} - V_{i\,max}$ [1] | (0.95 – 0.985 $V_o$) [2] | 3.4 – 0.4 V | "0" | 1 |
| D4 | D8 | no | yes | --- | (0.95 – 0.985 $V_o$) [2] | --- | "0" | --- |
| D0 [5] | D9 [5] | no | yes | --- | 3.5 V – $V_{o\,BR}$ [3] | --- | 2.5 – 0.6 V | --- |
| | | yes | no | $V_{i\,min} - V_{i\,max}$ [3, 4] | --- | 3.4 – 0.4 V | --- | |
| | | yes | yes | $V_{i\,min} - V_{i\,max}$ [3, 4] | 3.5 V – $V_{o\,BR}$ [3, 4] | 3.4 – 0.4 V | 2.5 – 0.6 V | |
| | | yes | yes | $V_{i\,min} - V_{i\,max}$ [3, 4] | (0.95 – 0.985 $V_o$) [2] | 3.4 – 0.4 V | "0" | |
| --- | DD | yes | yes | $V_{i\,min} - V_{i\,max}$ [1] | 3.5 V – $V_{o\,BR}$ [1] | 3.4 – 0.4 V | 2.5 – 0.6 V | 2 |

1 Threshold level adjustable by potentiometer; see Electrical Output Data for $V_{o\,BR}$.
2 Fixed value. Tracking if $V_o/V_{o1}$ is adjusted via R-input, option P, or sense lines.
3 The threshold level permanently adjusted according to customer specification ±2 % at 25 °C. Any value within the specified range is basically possible, but causes a special type designation in addition to the standard option designations (D0/D9). See Electrical Output Data for $V_{o\,BR}$.
4 Adjustment at $I_{o\,nom}$.
5 Customer-specific part number

**JFET output (D0 – D4):**

Pin D is internally connected via the drain-source path of a JFET (self-conducting type) to the negative potential of output 1. $V_D \leq 0.4$ V (logic low) corresponds to a monitored voltage level ($V_i$ and/or $V_{o1}$) $< V_t$. The current $I_D$ through the JFET should not exceed 2.5 mA. The JFET is protected by a 0.5 W Zener diode of 8.2 V against external overvoltages.

**NPN output (D5 – DD):**

Pin D is internally connected via the collector-emitter path of a NPN transistor to the negative potential of output 1. $V_D < 0.4$ V (logic low) corresponds to a monitored voltage level ($V_i$ and/or $V_{o1}$) $> V_t + V_h$. The current $I_D$ through the open collector should not exceed 20 mA. The NPN output is not protected against external overvoltages. $V_D$ should not exceed 40 V.

*Table 21: JFET output (D0 – D4)*

| $V_b$, $V_{o1}$ status | D output, $V_D$ |
|---|---|
| $V_b$ or $V_{o1} < V_t$ | low, L, $V_D \leq 0.4$ V at $I_D = 2.5$ mA |
| $V_b$ and $V_{o1} > V_t + V_h$ | high, H, $I_D \leq 25$ µA at $V_D = 5.25$ V |

*Table 22: NPN output (D5 – DD)*

| $V_b$, $V_{o1}$ status | D output, $V_D$ |
|---|---|
| $V_b$ or $V_{o1} < V_t$ | high, H, $I_D \leq 25$ µA at $V_D = 40$ V |
| $V_b$ and $V_{o1} > V_t + V_h$ | low, L, $V_D \leq 0.4$ V at $I_D = 20$ mA |

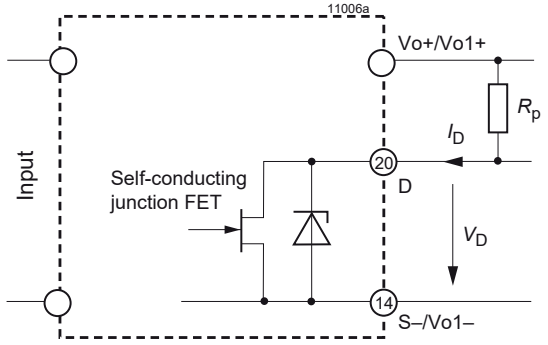


*Fig. 35*
*Option D0 – D4: JFET output, $I_D \leq 2.5$ mA*

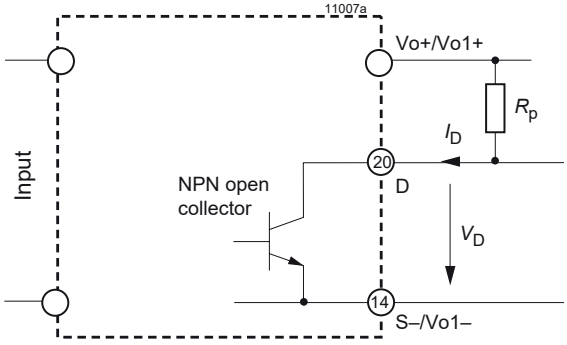


*Fig. 36*
*Option D5 – DD: NPN output, $V_o \leq 40$, $I_D \leq 2.5$ mA*

**Threshold tolerances and hysteresis:**

If $V_i$ is monitored, the internal input voltage after the input filter is measured. Consequently this voltage differs from the voltage at the connector pins by the voltage drop $\Delta V_{ti}$ across the input filter. The threshold levels of the D0 and D9 options are factory adjusted at nominal output current $I_{o\,nom}$ and $T_A = 25$ °C. The value of $\Delta V_{ti}$ depends upon input voltage range (CK, DK, ..), threshold level $V_t$, temperature, and input current. The input current is a function of the input voltage and the output power.


© 2025 Bel Fuse Inc. BCD20004-G_AG 29 October 2025

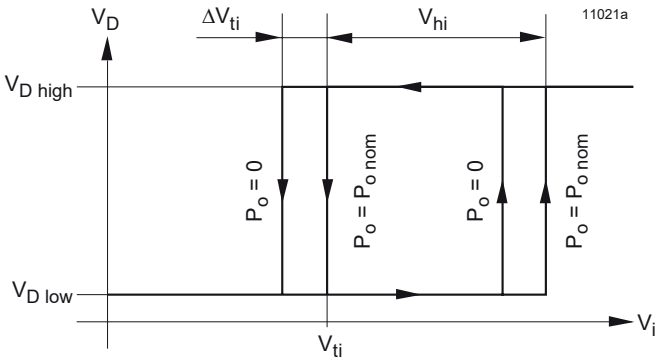


*Fig. 37*
*Definition of $V_{ti}$, $\Delta V_{ti}$ and $\Delta V_{hi}$ (JFET output)*

*Table 23: D-output logic signals*

| Version of D | $V_i < V_t$ or $V_o < V_t$ | $V_i > V_t + V_h$ or $V_o > V_t$ | Configuration |
|---|---|---|---|
| D1, D2, D3, D4, D0 | low | high | JFET |
| D5, D6, D7, D8, D9, DD | high | low | NPN |



**Asia-Pacific**
+86 755 298 85888
**EMEA**
+353 61 531 820
**North America**
+1 866 513 2839
powersupport@belf.com
**belfuse.com**

© 2025 Bel Fuse Inc. BCD20004-G_AG 29 October 2025

### Input voltage monitoring

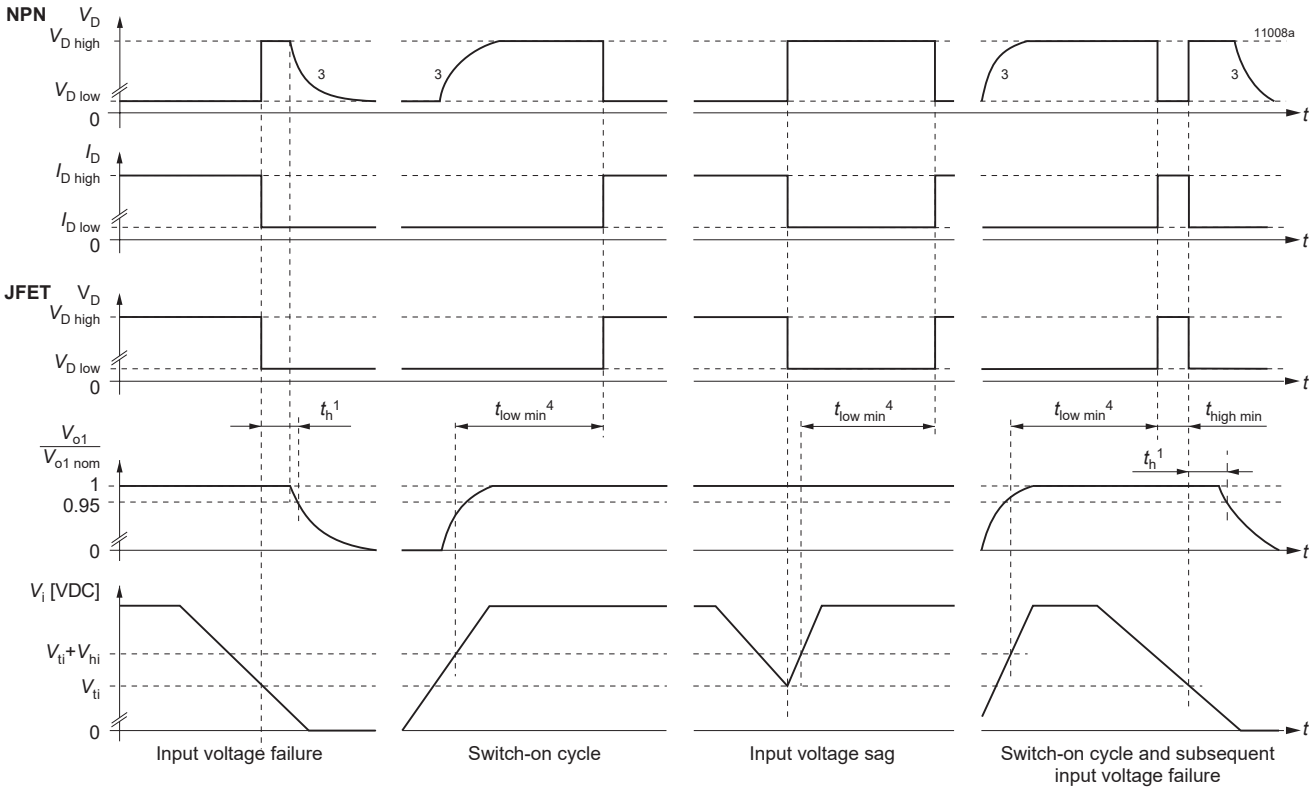


### Output voltage monitoring

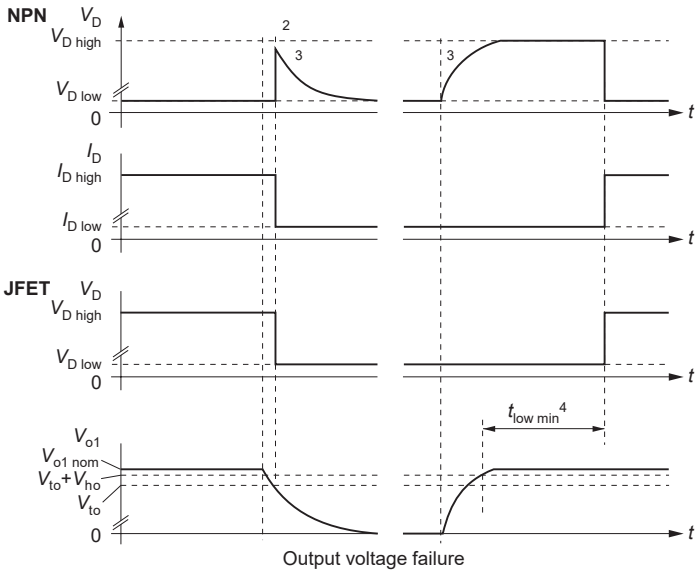


1 Hold-up time see *Electrical Input Data*

2 With output voltage monitoring, hold-up time $t_h = 0$

3 The signal remains high, if the D output is connected to an external source

4 $t_{low\ min}$ = 100 – 170 ms, typ. 130 ms

*Fig. 38*
*Relationship between $V_i$, $V_o$, $V_D$, $V_o/V_{o\ nom}$ versus time*

*Table 24: Option V: Factory potentiometer setting of $V_{ti}$ with resulting hold-up time*

| Model | AK | BK | FK | CK | DK | EK | LK | Unit |
|---|---|---|---|---|---|---|---|---|
| $V_{ti}$ | 9.5 | 19.5 | 39 | 39 | 61 | 97 | 120 | VDC |
| $t_h$ | 0.1 | 0.1 | 3.4 | 1.1 | 1.1 | 2.7 | 4.2 | ms |


© 2025 Bel Fuse Inc. BCD20004-G_AG 29 October 2025

## V ACFAIL signal (VME)

Available for units with $V_{o\,nom}$ = 5.1 V only.

This option defines an undervoltage monitoring circuit for the input or for the input and main output voltage (5.1 V) similar to option D and generates an ACFAIL signal (V signal), which conforms to the VME standard.

The low state level of the ACFAIL signal is specified at a sink current of $I_V \leq 48$ mA to $V_V \leq 0.6$ V (open-collector output of an NPN transistor). The pull-up resistor feeding the open-collector output should be placed on the VME back plane.

After the ACFAIL signal has gone low, the VME standard requires a hold-up time $t_h$ of at least 4 ms, before the 5.1 V output drops to 4.875 V, when the output is fully loaded. This hold-up time $t_h$ is provided by the internal input capacitance. Consequently the working input voltage and the threshold level $V_{ti}$ should be adequately above $V_{i\,min}$ of the converter, so that enough energy is remaining in the input capacitance. If $V_i$ is below the required level, an external hold-up capacitor ($C_{i\,ext}$) should be added; refer to the formulas below:

$$V_{ti} = \sqrt{\frac{2 \cdot P_o \cdot (t_h + 0.3\ \text{ms}) \cdot 100}{C_{i\,min} \cdot \eta} + V_{i\,min}^{\,2}}$$

$$C_{i\,ext} = \frac{2 \cdot P_o \cdot (t_h + 0.3\ \text{ms}) \cdot 100}{\eta \cdot (V_{ti}^{\,2} - V_{i\,min}^{\,2})} - C_{i\,min}$$

where as:

$C_{i\,min}$ = internal input capacitance [mF]; see table 2
$C_{i\,ext}$ = external input capacitance [mF]
$P_o$ = output power [W]
$\eta$ = efficiency [%]
$t_h$ = hold-up time [ms]
$V_{i\,min}$ = minimum input voltage [V] [1]
$V_{ti}$ = threshold level [V]

[1] $V_{i\,min}$ see *Electrical Input Data*. For output voltages $V_o > V_{o\,nom}$, $V_{i\,min}$ increases proportionally to $V_o/V_{o\,nom}$.

**Note**: Option V2 and V3 can be adjusted by the potentiometer to a threshold level between $V_{i\,min}$ and $V_{i\,max}$. A decoupling diode should be connected in series with the input of AK – FK converters to avoid the input capacitance discharging through other loads connected to the same source voltage.

*Table 25: Undervoltage monitor functions*

| Option | Monitoring | | Minimum adjustment range of threshold level $V_t$ | | Typical hysteresis $V_h$ [% of $V_t$] for $V_{t\,min} - V_{t\,max}$ | |
|---|---|---|---|---|---|---|
| | $V_i$ | $V_o$ or $V_{o1}$ | $V_{ti}$ | $V_{to}$ | $V_{hi}$ | $V_{ho}$ |
| V2 | yes | no | $V_{i\,min} - V_{i\,max}$ [1] | --- | 3.4 – 0.4 V | --- |
| V3 | yes | yes | $V_{i\,min} - V_{i\,max}$ [1] | 0.95 – 0.985 $V_{o1}$ [2] | 3.4 – 0.4 V | “0” |
| V0 | yes | no | $V_{i\,min} - V_{i\,max}$ [3, 4] | --- | 3.4 – 0.4 V | --- |
| | yes | yes | $V_{i\,min} - V_{i\,max}$ [3, 4] | 0.95 – 0.985 $V_{o1}$ [2] | 3.4 – 0.4 V | “0” |

[1] Threshold level adjustable by potentiometer.
[2] Fixed value between 95% and 98.5% of $V_{o1}$ (tracking).
[3] Adjusted at $I_{o\,nom}$.
[4] Fixed value, resistor-adjusted (±2% at 25°C) accord. to customer’s specification; individual type number is determined by the company.

Option V operates independently of the built-in input undervoltage lockout circuit. A logic “low” signal is generated at pin 20, as soon as one of the monitored voltages drops below the preselected threshold level $V_t$. The return for this signal is S–. The V output recovers, when the monitored voltages exceed $V_t + V_h$. The threshold level $V_{ti}$ is either adjustable by a potentiometer, accessible through a hole in the front cover, or adjusted in the factory to a determined customer-specific value. Refer to table 26.

### V output (V0, V2, V3):

Pin V is internally connected to the open collector of an NPN transistor. The emitter is connected to S–. $V_V \leq 0.6$ V (logic low) corresponds to a monitored voltage level ($V_i$ and/or $V_o$) $< V_t$. $I_V$ should not exceed 50 mA. The V output is not protected against external overvoltages: $V_V$ should not exceed 60 V.

Threshold tolerances and hysteresis:

If $V_i$ is monitored, the internal input voltage is measured after the input filter. Consequently this voltage differs from the voltage at the connector pins by the voltage drop $\Delta V_{ti}$ across the input filter. The threshold level of option V0 is adjusted in the factury at $I_{o\,nom}$ and $T_A$ = 25 °C. The value of $\Delta V_{ti}$ depends upon the input voltage range (AK, BK, etc.), threshold level $V_t$, temperature, and input current. The input current is a function of input voltage and output power.

*Table 26: NPN-output (V0, V2, V3)*

| $V_i$, $V_{o1}$ status | V output, $V_v$ |
|---|---|
| $V_i$ or $V_{o1} < V_t$ | low, L, $V_V \leq 0.6$ V at $I_V$ = 50 mA |
| $V_i$ and $V_{o1} > V_t + V_h$ | high, H, $I_V \leq 25$ µA at $V_V$ = 5.1 V |



Asia-Pacific
+86 755 298 85888
EMEA
+353 61 531 820
North America
+1 866 513 2839
powersupport@belf.com
belfuse.com

© 2025 Bel Fuse Inc. BCD20004-G_AG 29 October 2025

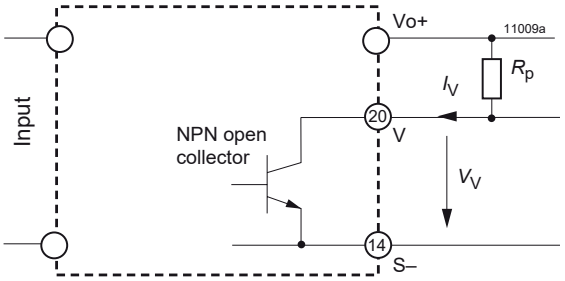


*Fig. 39*
*Output configuration of options V0, V2 and V3*

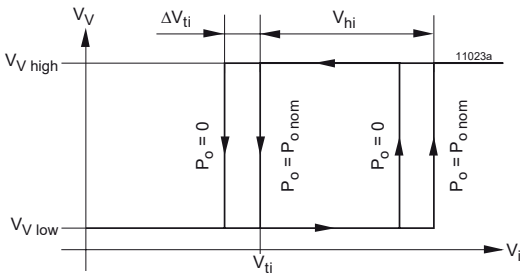


*Fig. 40*
*Definition of $V_{ti}$, $\Delta V_{ti}$ and $V_{hi}$*

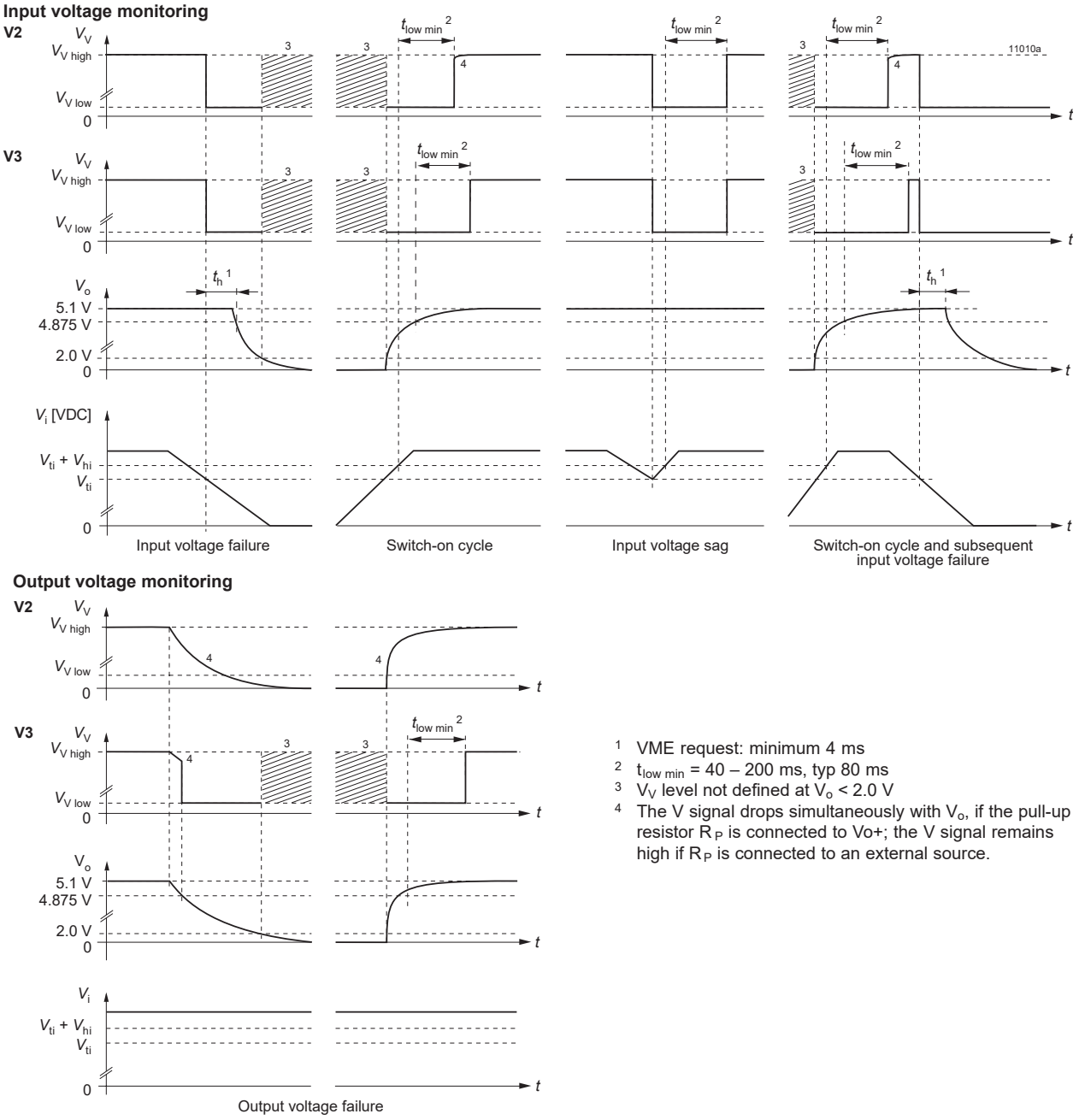


*Fig. 41*
*Relationship between $V_b$, $V_o$, $V_D$, $V_o/V_{o\ nom}$ versus time*

1 VME request: minimum 4 ms
2 $t_{low\ min}$ = 40 – 200 ms, typ 80 ms
3 $V_V$ level not defined at $V_o$ < 2.0 V
4 The V signal drops simultaneously with $V_o$, if the pull-up resistor $R_P$ is connected to Vo+; the V signal remains high if $R_P$ is connected to an external source.


© 2025 Bel Fuse Inc. BCD20004-G_AG 29 October 2025

### K Standard H15 Connector

Option K is available only for 5.1 V output models in order to avoid the connector with high current contacts. Efficiency is approx. 1.5% worse.

### B, B1, B2 Cooling Plate

Where a cooling surface is available, we recommend the use of a cooling plate instead of the standard heat sink. The mounting system should ensure that the maximum case temperature $T_{C\,max}$ is not exceeded. The cooling capacity is calculated by (η see *Model Selection)*:

$$P_{Loss} = \frac{(100\,\% - \eta)}{\eta} \cdot V_o \cdot I_o$$

For the dimensions of the cooling plates, see *Mechanical Data*. Option B2 is for customer-specific models with elongated case (for 220 mm DIN-rack depth).

### G RoHS

RoHS-compliant for all six substances.



**Asia-Pacific**
+86 755 298 85888

**EMEA**
+353 61 531 820

**North America**
+1 866 513 2839

powersupport@belf.com
belfuse.com

© 2025 Bel Fuse Inc. BCD20004-G_AG 29 October 2025

## Accessories

A variety of electrical and mechanical accessories are available including:

– Front panels for 19” DIN-rack: Schroff or Intermas, 12 TE / 3U; see fig. 42.
– Mating H15 connectors with screw, solder, faston, or press-fit terminals, code key system and coding wedges HZZ00202-G; see fig. 43.
– Pair of connector retention clips HZZ01209-G; see fig. 44
– Connector retention brackets HZZ01216-G; see fig. 45
– Cage clamp adapter HZZ00144-G; see fig. 46
– Different cable hoods for H15 connectors (fig. 47):
  - HZZ00141-G, screw version
  - HZZ00142-G, use with retention brackets HZZ01218-G
  - HZZ00143-G, metallic version providing fire protection
– Chassis or wall-mounting plate K02 (HZZ01213-G) for models with option B1. Mating connector (HZZ00107-G) with screw terminals; see fig. 48
– DIN-rail mounting assembly HZZ0615-G (DMB-K/S); see fig. 49
– Additional external input and output filters
– Different battery sensors S-KSMH... for using the converter as a battery charger. Different cell characteristics can be selected; see fig. 50, table 27, and *Battery Charging/Temperature Sensors.*

**For additional accessory product information, see the accessory data sheets listed with each product series or individual model at our web site.**



*Fig. 42*
*Different front panels*

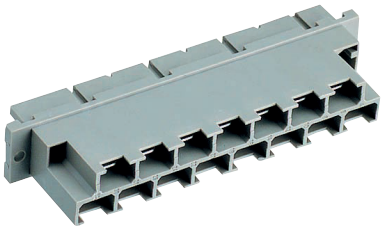

*Fig. 43*
*Different mating connectors*

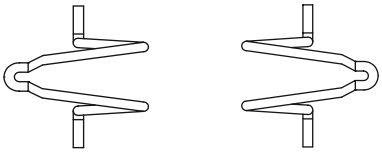

*Fig.44*
*Connector retention clips to fasten the H15 connector to the rear plate; see fig. 24. HZZ01209-G consists of 2 clips.*

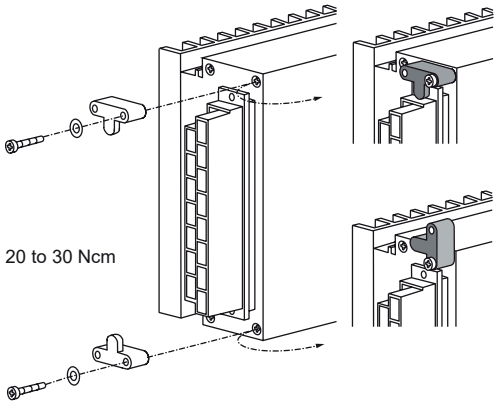


*Fig. 45*
*Connector retention brackets HZZ01216-G (CRB-HKMS)*

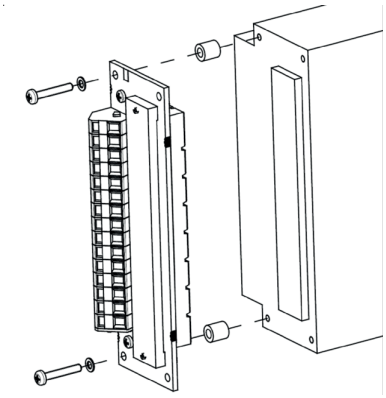

*Fig. 46*
*Cage clamp adapter HZZ00144-G*



Asia-Pacific
+86 755 298 85888
EMEA
+353 61 531 820
North America
+1 866 513 2839
powersupport@belf.com
belfuse.com

© 2025 Bel Fuse Inc. BCD20004-G_AG 29 October 2025

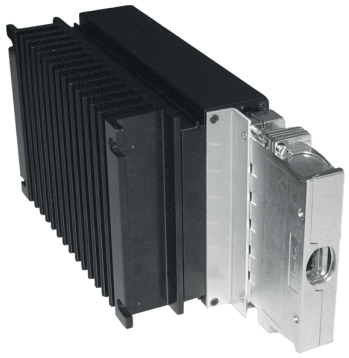

*Fig. 47*
*Different cable hoods*



*Fig. 48*
*Chassis- or wall-mounting plate HZZ01213-G (Mounting plate K02)*

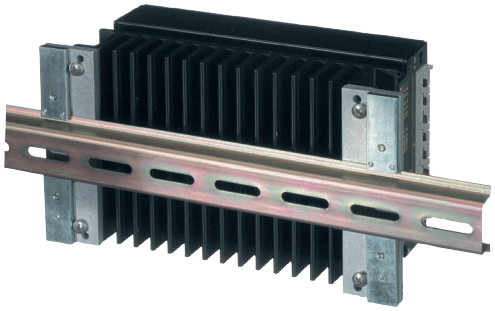

*Fig. 49*
*DIN-rail mounting assembly HZZ00615-G (DMB-K/S)*

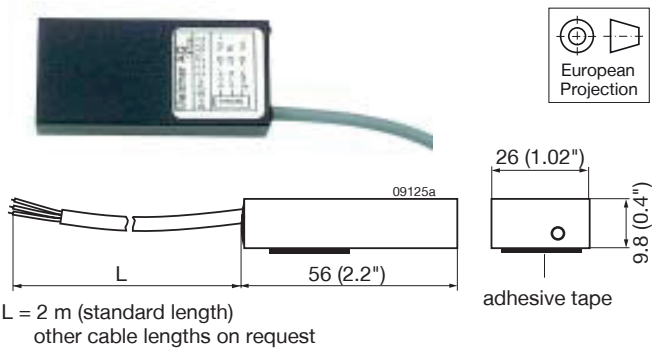


*Fig. 50*
*Battery temperature sensor*

*Table 27: Battery temperature sensors*

| Battery voltage nom. [V] | Sensor type | Cell voltage [V] | Cell temp. coefficient [mV/K] | Cable length [m] |
|---|---|---|---|---|
| 12 | S-KSMH12-2.27-30-2 | 2.27 | –3.0 | 2 |
| 12 | S-KSMH12-2.27-35-2 | 2.27 | –3.5 | 2 |
| 24 | S-KSMH24-2.27-30-2 | 2.27 | –3.0 | 2 |
| 24 | S-KSMH24-2.27-35-2 | 2.27 | –3.5 | 2 |
| 24 | S-KSMH24-2.31-35-0 | 2.31 | –3.5 | 4.5 |
| 24 | S-KSMH24-2.31-35-2 | 2.31 | –3.5 | 2 |
| 24 | S-KSMH24-2.35-35-2 | 2.35 | –3.5 | 2 |
| 48 | S-KSMH48-2.27-30-2 | 2.27 | –3.0 | 2 |
| 48 | S-KSMH48-2-27-35-2 | 2.27 | –3.5 | 2 |

**Note**: Other temperature coefficients and cable lengths are available on request.

**NUCLEAR AND MEDICAL APPLICATIONS** - These products are not designed or intended for use as critical components in life support systems, equipment used in hazardous environments, or nuclear control systems.

**TECHNICAL REVISIONS** - The appearance of products, including safety agency certifications pictured on labels, may change depending on the date manufactured. Specifications are subject to change without notice.



**Asia-Pacific**
+86 755 298 85888

**EMEA**
+353 61 531 820

**North America**
+1 866 513 2839

powersupport@belf.com
belfuse.com

© 2025 Bel Fuse Inc. BCD20004-G_AG 29 October 2025