THIS DRAWING AND THE SUBJECT MATTER SHOWN THEREON ARE CONFIDENTIAL AND THE PROPERTY OF BEL/STEWART/TRP CONNECTOR AND SHALL NOT BE REPRODUCED, COPIED, OR USED IN ANY MANNER WITHOUT THE WRITTEN CONSENT OF TRP CONNECTOR.

PRODUCT MAY BE PROTECTED BY ONE OR MORE OF THE FOLLOWING US PATENTS:
5736910 5939955 6425781 6428361 6554638 6840817 7123117
7429195 7717749 7808751 6217391 6149050 7924130

REVISIONS					
P	LTR	DESCRIPTION	DATE	DWN	APVD
	G	EC-1411035 COMPANY LOGO CHANGE	28DEC2014	GZ	TY

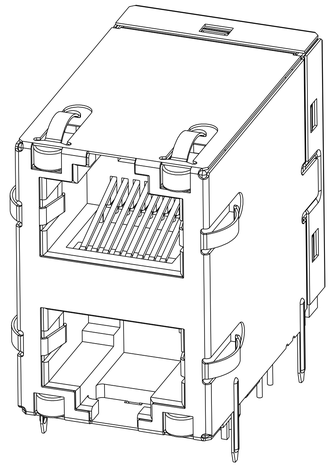

S8G56 GIGABIT CIRCUIT 2 7
TOP AND BOTTOM PORTS

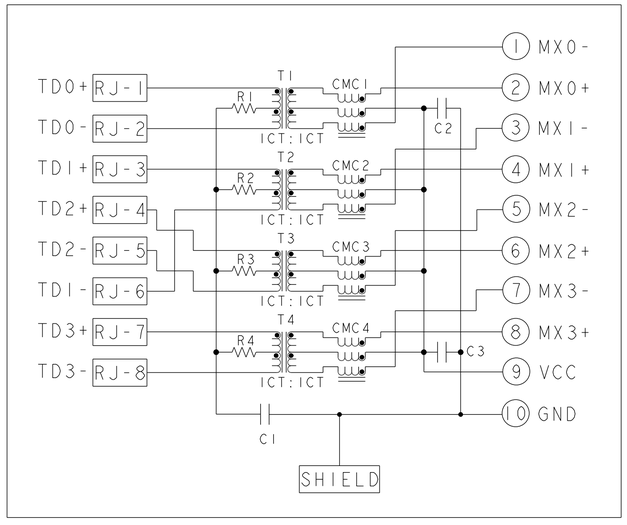

C1 = 1000pF, 2kV CAPACITOR
C2 - C3 = 10nF, 50V CAPACITORS
R1-R4 = 75 Ohms, 1/16 W, RESISTORS

1. MATERIALS:
PLASTIC HOUSING: BLACK, THERMOPLASTIC FLAMMABILITY RATING UL 94V-0
SHIELD: BRASS, PREPLATED WITH 0.76um MIN SEMI-BRIGHT NICKEL,
POST DIPPED WITH 2.54um MIN SAC SOLDER ON SOLDER TAILS,
CONTACTS: PHOSPHOR BRONZE, 1.27um MIN OVERALL NICKEL
UNDERPLATE WITH SELECT 1.27um MIN GOLD OR WITH SELECT 0.05um
MIN GOLD OVER 0.76um MIN PALLADIUM-NICKEL AT MATING INTERFACE
AND 2.54um MIN MATTE TIN ON SOLDER TAILS.
ALL PC BOARDS: HIGH TEMPERATURE PCB,TG>170°C

2 MAGNETICS
APPLICATION: 10/100/1000 BASE-T
IMPEDANCE: 100 OHMS
TURNS RATIO (CHIP:CABLE): 1:1 ALL FOUR PAIRS
OPEN CIRCUIT INDUCTANCE (OCL): 350uH MIN @100kHz, 0.1VRMS,
8mADC BIAS FROM 0°C TO 70°C, ALL FOUR PAIRS
ALL FOUR PAIRS BI-DIRECTIONAL
PERFORMANCE @ 25°C:
INSERTION LOSS (IL): 1.1dB MAX FROM 0.5MHz TO 100MHz
RETURN LOSS (RL): 18dB MIN FROM 0.5MHz TO 40MHz
12-20LOG(f/80)dB MIN FROM 40.1MHz TO 100MHz
CROSSTALK ATTENUATION: 35dB MIN FROM 0.5MHz TO 40MHz
33-20LOG(f/50)dB MIN FROM 40.1MHz TO 100MHz
COMMON MODE REJECTION RATIO (CMRR): 30dB MIN FROM 0.5MHz TO 100MHz
ISOLATION VOLTAGE: 2250VDC (MAX) FOR 60 SECONDS WITH A RISE TIME OF 500V/SEC AND WITH ALL PORTS CONNECTED

3 PART NUMBER, DATE CODE AND COUNTRY OF ORIGIN ARE LOCATED IN APPROXIMATE AREA SHOWN.DATE CODE: "YY" IS YEAR, "WW" IS WORK WEEK, "D" IS DAY OF WEEK, WITH SUNDAY=1

4 TRP CONNECTOR LOGO AND AGENCY APPROVAL LOGO ARE LOCATED IN APPROXIMATE AREA SHOWN.

5. OPERATING TEMP: FROM 0°C TO +70°C.

6. RJ45 CAVITY CONFORMS TO FCC RULES AND REGULATION PART 68 SUBPART F.

7 INDICATED MAGNETIC CONNECTIONS ARE SYMMETRICAL AND SUPPORT AUTO-MDI/MDIX.

8 DATUM AND BASIC DIMENSION ESTABLISHED BY CUSTOMER.

9 BASIC DIMENSION ESTABLISHED BY CUSTOMER, BUT MAY NOT BE GREATER THAN 5.08mm.

10 LEDS ARE DRIVEN WITH CONSTANT CURRENT AT APPROX 20mA
LED COLOR: DOMINANT WAVELENGTH (λD): GREEN 568 nm TYP. @ IF=20mA
FORWARD VOLTAGE (VF): GREEN 2.2V TYP. @ IF=20mA
DOMINANT WAVELENGTH (λD): YELLOW 588 nm TYP. @ IF=20mA
FORWARD VOLTAGE (VF): YELLOW 2.1V TYP. @ IF=20mA
DOMINANT WAVELENGTH (λD): ORANGE 605 nm TYP. @ IF=20mA
FORWARD VOLTAGE (VF): ORANGE 2.1V TYP. @ IF=20mA

11. THE PARTS ARE RECOMMENDED FOR WAVE SOLDERING PROCESS, PEAK TEMPERATURE 260°C MAX, 10 SECONDS MAX.

DIM A	LED POLARITY	BOTTOM LED 2	BOTTOM LED 1	TOP LED 2	TOP LED 1	PART NUMBER
2.27	STANDARD SEE SHEET 4	GREEN	YELLOW	GREEN	YELLOW	2-1840689-3
3.56	STANDARD SEE SHEET 4	GREEN/YELLOW	GREEN	GREEN	GREEN/YELLOW	1-1840689-9
3.56	SPECIAL SEE SHEET 4	YELLOW	GREEN	GREEN	YELLOW	1-1840689-2
3.04	STANDARD SEE SHEET 4	GREEN/YELLOW	GREEN	GREEN/YELLOW	GREEN	1840689-5
3.04	STANDARD SEE SHEET 4	GREEN	GREEN/ORANGE	GREEN	GREEN/ORANGE	1840689-6
3.04	STANDARD SEE SHEET 4	GREEN	YELLOW	GREEN	YELLOW	1840689-3

THIS DRAWING IS A CONTROLLED DOCUMENT.

DIMENSIONS: mm

TOLERANCES UNLESS OTHERWISE SPECIFIED:
0 PLC ±0.25
1 PLC ±0.25
2 PLC ±0.25
3 PLC ±-
4 PLC ±-
ANGLES ±-

PRODUCT SPEC: 108-104004
APPLICATION SPEC: -

DWN: GABRIEL.Z/TERRY.LIN 07JAN2012
CHK: TONY YUAN 07JAN2012
APVD: KEITH ZHU 07JAN2012

trp CONNECTOR a bel group — DONGGUAN CHINA

MODEL NAME: MAGJACK STACK Non-PoE

DESC: 2X1 S8G56 GIGABIT W/ LED

SIZE: A1 | CAGE CODE | DRAWING NO: C-1840689 | RESTRICTED TO: -

CUSTOMER DRAWING | SCALE 4:1 | SHEET 1 OF 4 | REV G

Please read our datasheet & drawing disclaimer here.

© COPYRIGHT TRP connector ALL RIGHTS RESERVED

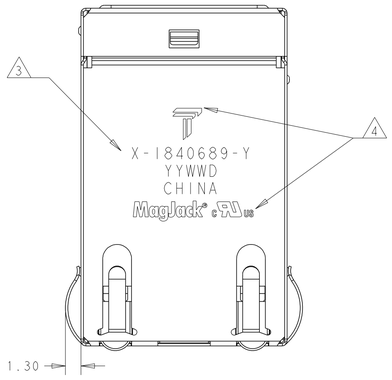

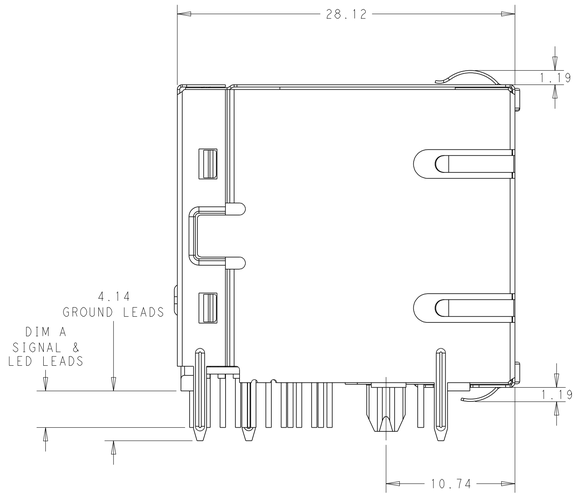

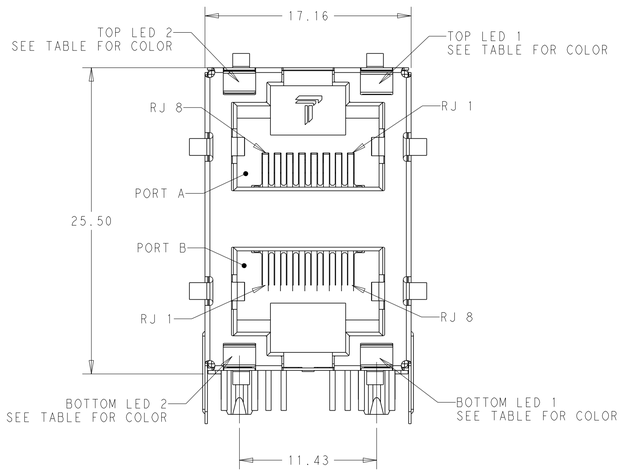

THIS DRAWING IS A CONTROLLED DOCUMENT.

DIMENSIONS: mm

TOLERANCES UNLESS OTHERWISE SPECIFIED:
0 PLC ±0.25
1 PLC ±0.25
2 PLC ±0.25
3 PLC ±-
4 PLC ±-
ANGLES ±-

PRODUCT SPEC 108-104004

APPLICATION SPEC -

DWN GABRIEL Z/TERRY LIN 07JAN2012
CHK TONY YUAN 07JAN2012
APVD KEITH ZHU 07JAN2012

trp CONNECTOR a bel group — DONGGUAN CHINA

MODEL NAME: MAGJACK STACK Non-PoE

DESC: 2X1 S8G56 GIGABIT W/ LED

SIZE A1 | CAGE CODE | DRAWING NO C-1840689 | RESTRICTED TO -

CUSTOMER DRAWING | SCALE 4:1 | SHEET 2 OF 4 | REV G

© COPYRIGHT TRP connector ALL RIGHTS RESERVED

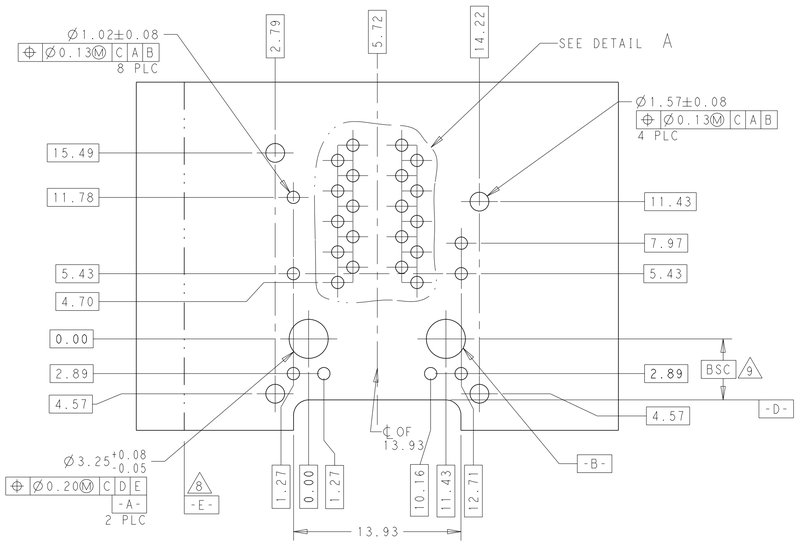

RECOMMENDED PCB LAYOUT
COMPONENT SIDE VIEW



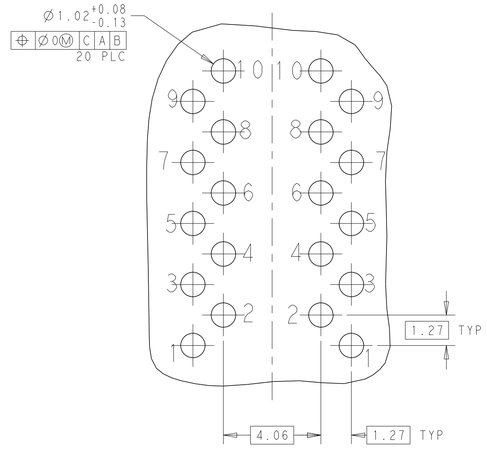

DETAIL A
SCALE 8:1

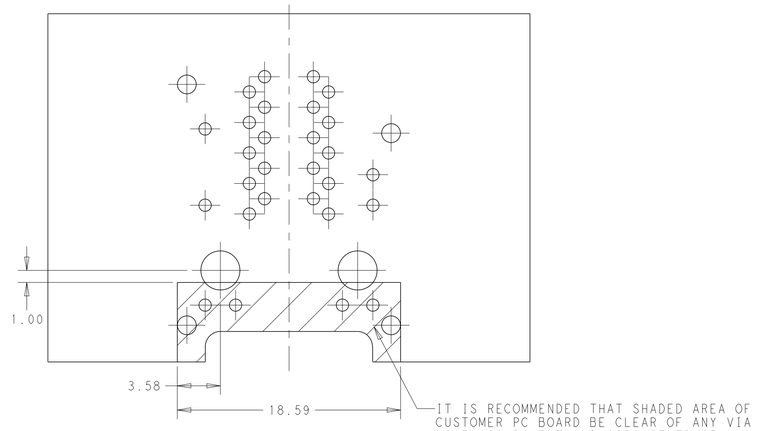

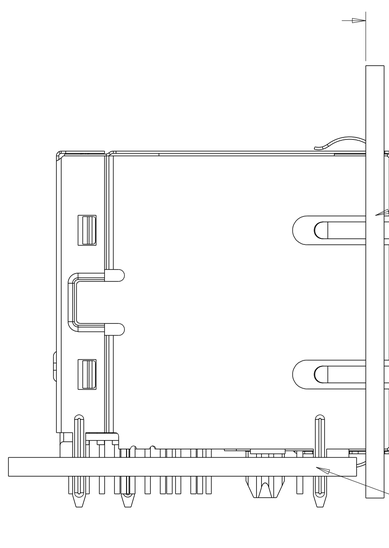

SHOWN WITH PANEL AND
CUSTOMER PCB ASSEMBLY

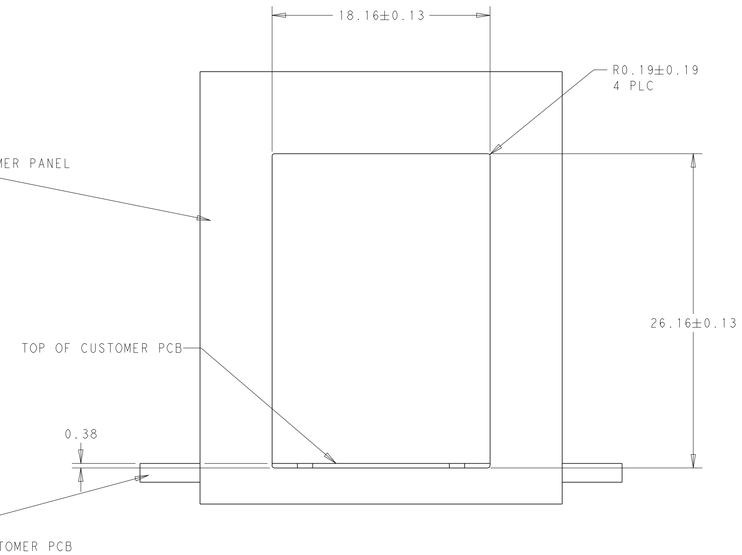

SUGGESTED PANEL CUTOUT DIMENSIONS

THIS DRAWING IS A CONTROLLED DOCUMENT.		DWN 07JAN2012 GABRIEL Z/TERRY LIN	trp CONNECTOR a bel group — DONGGUAN CHINA
		CHK 07JAN2012 TONY YUAN	
DIMENSIONS: mm	TOLERANCES UNLESS OTHERWISE SPECIFIED: 0 PLC ±0.25; 1 PLC ±0.25; 2 PLC ±0.25; 3 PLC ±-; 4 PLC ±-; ANGLES ±-	APVD 07JAN2012 KEITH ZHU	MODEL NAME: MAGJACK STACK Non-PoE — DESC: 2X1 S8G56 GIGABIT W/ LED
PRODUCT SPEC 108-104004	APPLICATION SPEC -	SIZE A1 — CAGE CODE — DRAWING NO C-1840689 — RESTRICTED TO -	
CUSTOMER DRAWING		SCALE 4:1 — SHEET 3 OF 4 — REV G	

© COPYRIGHT TRP connector ALL RIGHTS RESERVED

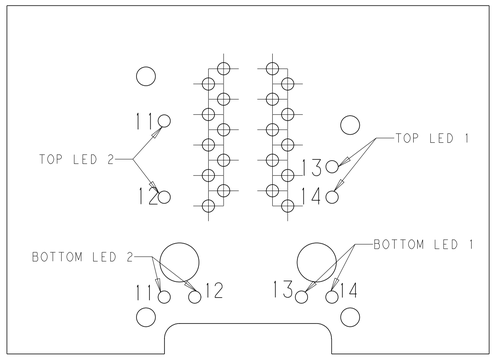

LED HOLE DESIGNATIONS
VIEWED FROM COMPONENT SIDE

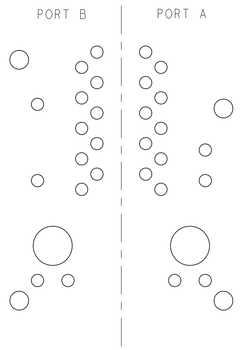

PORT ASSIGNMENT
COMPONENT SIDE VIEW

STANDARD LED POLARITY

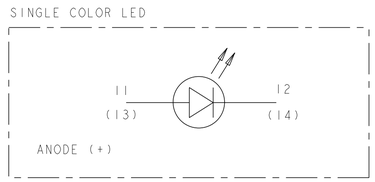

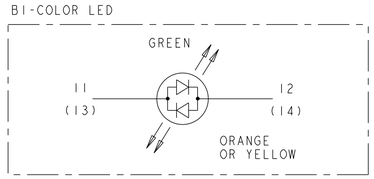

LED POLARITY
FOR 1-1840689-2 ONLY

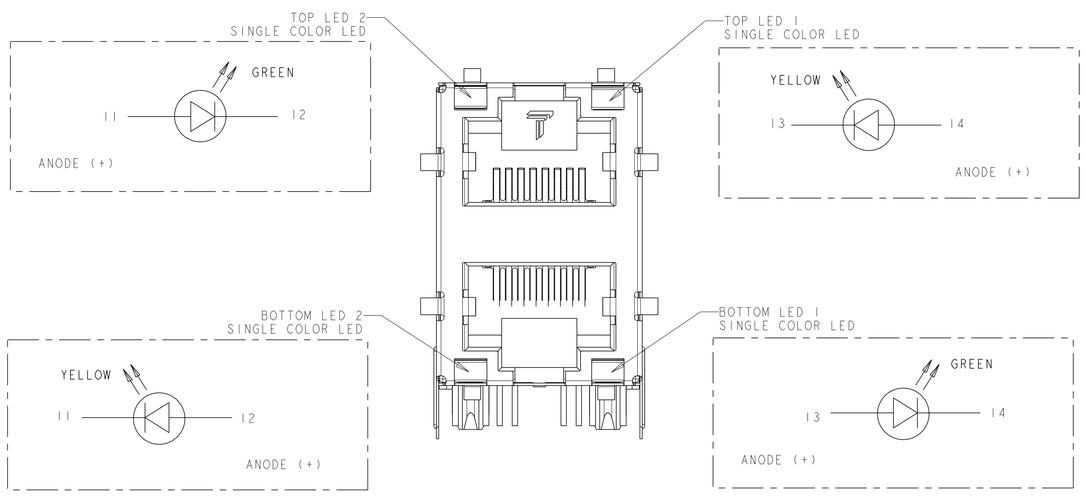

THIS DRAWING IS A CONTROLLED DOCUMENT.		DWN 07JAN2012 GABRIEL Z/TERRY LIN	trp CONNECTOR a bel group — DONGGUAN CHINA
DIMENSIONS: mm	TOLERANCES UNLESS OTHERWISE SPECIFIED: 0 PLC ±0.25, 1 PLC ±0.25, 2 PLC ±0.25, 3 PLC ±-, 4 PLC ±-, ANGLES ±-	CHK 07JAN2012 TONY YUAN APVD 07JAN2012 KEITH ZHU	MODEL NAME: MAGJACK STACK Non-PoE DESC: 2X1 S8G56 GIGABIT W/ LED
PRODUCT SPEC: 108-104004	APPLICATION SPEC: -		SIZE A1 · CAGE CODE · DRAWING NO C-1840689 · RESTRICTED TO -
CUSTOMER DRAWING			SCALE 4:1 · SHEET 4 OF 4 · REV G