RFA-100-005	CUSTOMER PRODUCT SPECIFICATION SHEET	RoHS Compliant

RFA-100-005: SMA ANTENNA WITH ELBOW, 600MHz to 5950MHz, RATED TO IPX5, ADDITIONAL SNAP 45°

Material and plating:

1. SMA Plug: Brass, Nickel plating
2. Bottom Base: PC+PBT, Black
3. Rivet: POM, Black
4. Upper Base: PC+PBT, Black
5. Cap: ABS, Black

Electrical

Frequency Range:
600~960Mhz,1428~1690Mhz
1710~2690Mhz;3300~5950MHz
Impendence: 50Ω
VSWR: 600~960Mhz<3.0; 1428Mhz<4.0,
1690Mhz<2.5; 1710Mhz<2.5;
2690Mhz<3.5,3300Mhz<3.5,
5950MHz<2.5
Radiation: Omni Directional
Gain: 3dBi +/-0.5
Polarization: Vertical
Maximum Power: 1W

Mechanical & Environment

Operating Temperature: -20°C to +65°C
Ingress Protection Rating: IPX5
Weight: 23.1g
Lead free ROHS

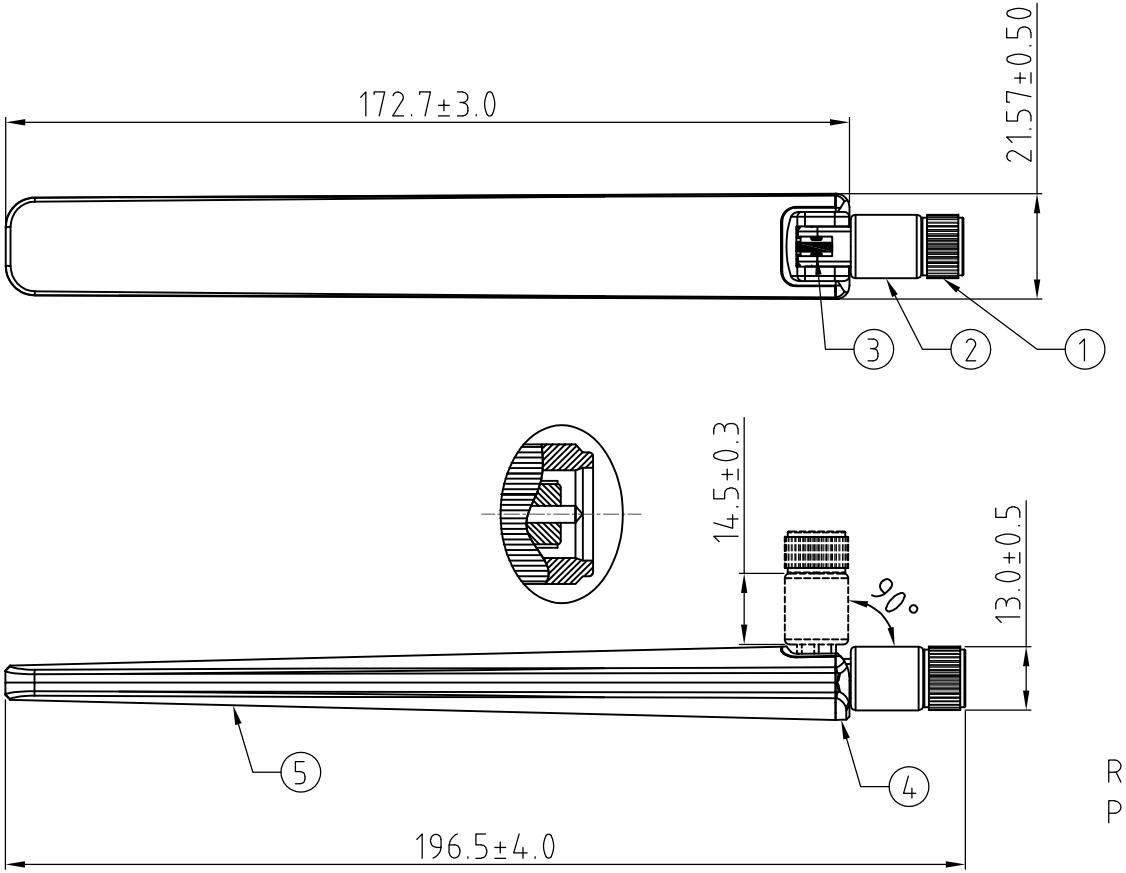

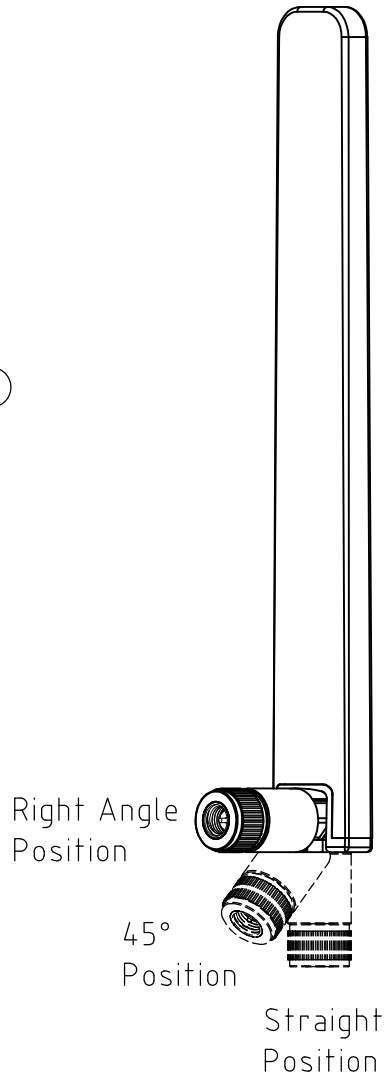

REV.	DATE & DRN	
1.0	04/08/23 - CC	RELEASE
1.1	24/01/24 - CC	Remove IP protection rating
1.2	07/02/24 - CC	Add IPX5 to the drawing
1.3	13/05/25 - NYW	Add GCT logo.

Scale: NTS	THIRD ANGLE	Unstated Tolerances: .X ± 0.30 .XX ± 0.20 .XXX ± 0.10 ANGLES	Material SEE NOTE
Drawn: CC			
App'd: PH	Title SMA Antenna		NOT TO SCALE
Date: 13 MAY '25	Revision: 1.3		Unit: mm

GCT GradConn
www.gct.co www.gradconn.com

© THIS DRAWING IS CONFIDENTIAL AND MUST NOT BE COPIED OR DISCLOSED WITHOUT WRITTEN CONSENT

Type: RFA-100-005
RFA-100-005
Drawing Number:
Sheet 1 of 1
Drawing © E and O E