# QUARTZ CRYSTAL MHZ

**Part Number: 830032878** | CFPX-104

AKA Number: LFXTAL032878

## General Information

Standard 5x3.2 mm SMD crystal with four pads. Ceramic package with a seam sealed metal lid, hermetically sealed.

## Dimensions [mm]

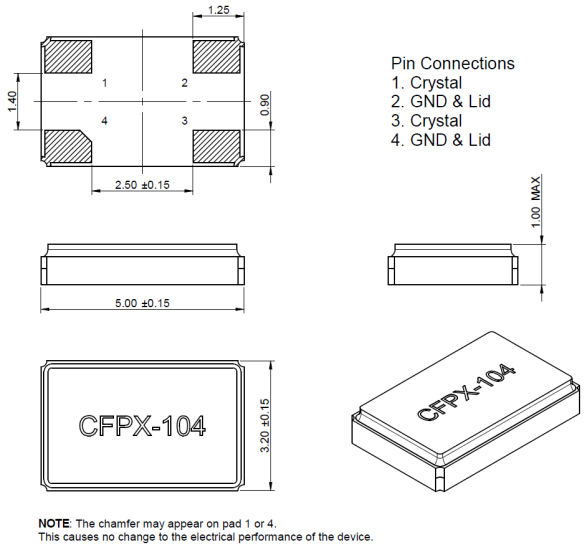


Pin Connections
1. Crystal
2. GND & Lid
3. Crystal
4. GND & Lid

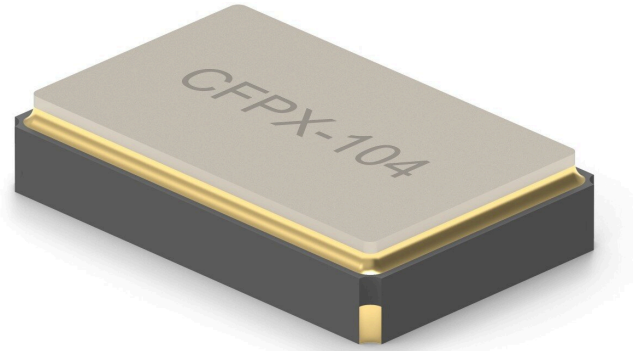


**NOTE**: The chamfer may appear on pad 1 or 4.
This causes no change to the electrical performance of the device.

## Recommended Land Pattern [mm]

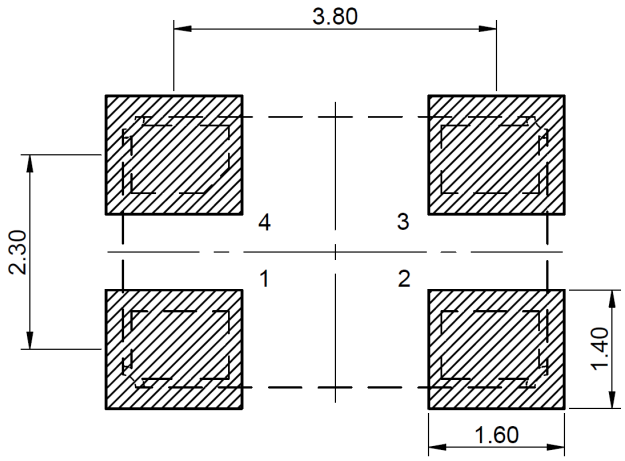

# QUARTZ CRYSTAL MHZ

**Part Number: 830032878** | CFPX-104

AKA Number: LFXTAL032878

## Frequency Parameters

| | |
|---|---|
| Frequency | 12.0 MHz |
| Frequency Tolerance | ± 50 ppm @25°C |
| Frequency Stability | ± 50 ppm |
| Operating Temperature | -10 °C to 60 °C |
| Overtone Order | Fundamental |
| Ageing | ± 3 ppm max per year @ 25 °C |

## Material Parameters

| | |
|---|---|
| Termination Finish | Au 0.3 µm to 1 µm |
| Moisture Sensitivity Level (MSL) | Not Applicable |

## Manufacturing Details

Reflow: 260 °C max for 30 seconds max.

## Electrical Parameters

| | |
|---|---|
| Load Capacitance $C_L$ | 18 pF |
| Shunt Capacitance $C_0$ | 7 pF max. |
| Drive Level | 100 µW max. |
| ESR | 90 Ω max. |

## Environmental Parameters

Storage Temperature Range: -55 °C to 125 °C

- Shock: 1500 g, 0.5 ms, 3 times in each of 3 mutually perpendicular planes.
- Vibration: MIL-STD-883F, 20 g (20 Hz ~ 2000 Hz), 1.52 mm amplitude, 20 minutes in 3 mutually perpendicular planes, 4 cycles.

## Technical Standards

| | |
|---|---|
| RoHS Status | 2015/863/EU - Compliant |
| REACH Status | Compliant |

## Packaging Details

| | |
|---|---|
| Packaging SPQ | Tape & Reel 1000 pcs |

Tape & reel in accordance with EIA-481
Quantities below the standard reel size to be supplied on cut tape.

## Company Address

IQD Frequency Products Ltd.
Station Road
Crewkerne
Somerset
TA18 8AR, United Kingdom