seeed studio

INDUSTRIAL PRODUCT DATASHEET

reTerminal E1003 10.3'' Monochrome ePaper Display

reTerminal E1003 10.3'' Monochrome ePaper Display — a touch-enabled, low-power ePaper dashboard with 3-second full refresh, 16-level grayscale, and up to 6-month battery life for smart home, office, and retail applications.

SKU	UPDATED	PRICE
100090602	2026-09-25 01:03:37	$159.90(Excl. VAT)

Overview

The reTerminal E1003 10.3'' Monochrome ePaper Display features a high-resolution 1404 × 1872 ePaper panel with 16-level grayscale, 3-second full refresh via T-CON, and built-in touch support for interactive dashboards. It is designed for smart home dashboards, low-power signage, and smart office or retail information displays, with a 3000mAh battery enabling up to 6 months of cable-free operation in low-power once-per-day refresh scenarios.

Key Features

Note:

- Smaller display options are also available within the reTerminal ePaper series, including **7.5'' monochrome** and **7.3'' full-color** versions.
- Compatible with ESPHome and Home Assistant, making it ideal for building a touch-enabled smart home dashboard.
- SenseCraft HMI has officially been renamed to **SenseCraft Seeedash**. All your existing content remain available as before.

- **3-Second Full Refresh for Faster ePaper Responsive Dashboards**

With an integrated T-CON timing controller, the reTerminal E1003 enables full-display refresh in just 3 seconds, significantly improving responsiveness compared to typical ePaper update performance. It's ideal for smart home dashboards, control panels, and dynamic status displays that require faster visual feedback with minimal delay.

- **Design Dashboards Faster with SenseCraft Seeedash**

The reTerminal E1003 works with **SenseCraft Seeedash**, a no-code UI design platform with ready-to-use templates for quickly creating and deploying dashboards. With built-in touch support in the SenseCraft Seeedash firmware, you can wake the display with a simple tap and navigate between pages naturally, making multi-page dashboards easier and more intuitive to use.

- **Expand Possibilities with Touch Interaction**

With built-in touch support, the reTerminal E1003 lets you interact directly with on-screen content—make selections, confirm tasks, adjust settings, or control connected functions. This transforms the display from a passive information screen into an intuitive interactive interface for smart home control, status dashboards, checklists, kiosks, and other customized applications, making everyday interactions faster and more natural.

- **Crisp Visuals with 16-Level Grayscale and High-Resolution ePaper Display**

The 10.3-inch ePaper display with 1404 × 1872 resolution and 16-level grayscale support delivers richer visual detail compared to typical monochrome ePaper panels. Whether showing dashboards, UI layouts, or data visualizations, the reTerminal E1003 provides clearer structure, improved readability, and more flexibility for information-rich interfaces.

- **6-Month Battery Life for Truly Cable-Free Placement**

Equipped with a built-in 3000mAh battery, the reTerminal E1003 runs up to 6 months on a single charge in the low power mode under a once-per-day refresh scenario. With no wiring required, it can be easily deployed on walls, desks, or anywhere dashboards and control panels are needed.

- **Flexible Hardware & Software Customization**

Leveraging Seeed Studio's extensive OEM/ODM expertise, the reTerminal E1003 can be customized to fit your exact needs. Whether you require specific sensors, modified I/O configurations, or tailored UI designs, it's built to adapt—ideal for industrial, educational, or personal use.

Product Gallery

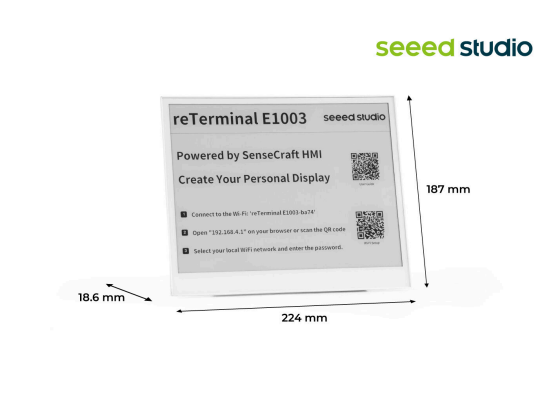

Specification

Product Name	reTerminal E1003
Processor	ESP32-S3 with 8MB PSRAM
Storage	32MB Flash, support Micro SD card
Display	10.3" Monochrome/ 16-level Grayscale
Resolution	1404x1872 Pixels
Micro SD Card	Maximum support 32GB SD card, FAT32 format
Wireless Connectivity	2.4GHz 802.11 b/g/n Wi-Fi, Bluetooth 5.0
Sensor	Temperature, humidity sensors
Microphone	Reserved for voice interaction application
Buzzer	Buzzer for sound alert
Battery	3000mAh
Power Input	USB-C 5V/1A
Software	Default firmware support SenseCraft Seeedash(SenseCraft Seeedash)
	Support Arduino/PlatformIO development platform
Working Temperature	0-40°C
Dimensions	224mm*187mm*18.6mm

ePaper Devices in Comparison	reTerminal E1001	reTerminal E1002	reTerminal E1003	reTerminal E1004

Display	Size	7.5''	7.3''	10.3''	13.3''
	Color	Monochrome	Full-color	Monochrome	Full-color
	Grayscale	4	/	16	/
	Resolution	800×480	800×480	1404×1872	1200×1600
	Partial Refresh	✅	❌	✅	❌
	Refresh Rate	2-5s	15-20s	2-3s	Around 20s
MCU		ESP32-S3	ESP32-S3	ESP32-S3	ESP32-S3
Enclosure		Metal	Metal	Metal	Metal
SD Card Support		✅	✅	✅	✅
Battery	Capacity	2000mAh	2000mAh	3000mAh	5000mAh
	Monitoring	✅	✅	✅	✅
Touch		❌	❌	✅	❌
Expansion Interfaces		UART & I2C	UART & I2C	I2C & GPIO	I2C & GPIO

Compatible Software	SenseCraft Seeedash Home Assistant Arduino TRMNL EEZ Studio SquareLine Vision	SenseCraft Seeedash Home Assistant Arduino TRMNL EEZ Studio SquareLine Vision	SenseCraft Seeedash Arduino ESPHOME TRMNL	SenseCraftSeeedashArduino
Certifications	FCC/CE/TELEC/ PSE/ROHS/UKCA	FCC/CE/TELEC/ PSE/ROHS/UKCA	FCC/CE	FCC/CE
MSRP	$69.00	$99.00	$159.90	$279.90

Hardware Overview

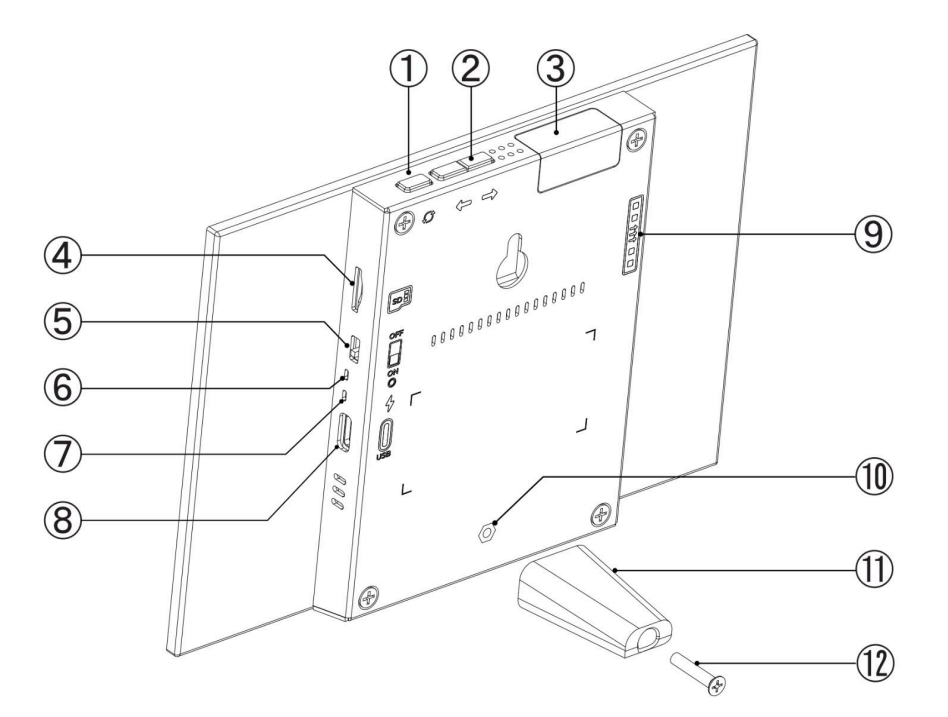

Applications

- **Home Automation Dashboards:** Display real-time smart home data like temperature, humidity, and air quality via Home Assistant.
- **Low-powerMonochromeelectronic photo frame:** With SenseCraft HMI or the App, you can easily upload a series of photos from your album remotely online. Combined with a large, high-resolution monochrome e-ink screen, it achieves ultra-low power image display, no longer have to worry about battery life.
- **Smart Office Displays:** Show meeting room availability, office schedules, or directional guidance in low-power, always-on ePaper displays.
- **Retail & Public Information Displays:** Low-power ePaper signs for menus, schedules, or occupancy indicators with long battery life.

Part List

reTerminal E1003 ePaper Display	X1
USB Type-C Cable	X1
3D Printed Stand	X1
Screw Driver	X1
Screw	X1

Compliance & Logistics

HSCODE	8543709990
USHSCODE	8517180050
UPC	
EUHSCODE	8543709099
COO	CHINA

FCC Requirement

Any changes or modifications not expressly approved by the party responsible for compliance could void the user's authority to operate the equipment.

This device complies with Part 15 of the FCC Rules. Operation is subject to the following two conditions:

(1) this device may not cause harmful interference, and
(2) this device must accept any interference received, including interference that may cause undesired operation.

15.21

This transmitter must not be co-located or operating in conjunction with any other antenna or transmitter.

Note: This equipment has been tested and found to comply with the limits for a Class B digital device, pursuant to Part 15 of the FCC Rules.

These limits are designed to provide reasonable protection against harmful interference in a residential installation.

This equipment generates, uses, and can radiate radio frequency energy.

If not installed and used in accordance with the instructions, it may cause harmful interference to radio communications.

However, there is no guarantee that interference will not occur in a particular installation.

If this equipment does cause harmful interference to radio or television reception, which can be determined by turning the equipment off and on, the user is encouraged to try to correct the interference by one or more of the following measures:

- Reorient or relocate the receiving antenna.
- Increase the separation between the equipment and receiver.
- Connect the equipment into an outlet on a circuit different from that to which the receiver is connected.
- Consult the dealer or an experienced radio/TV technician for help.

Resource Links

- https://www.seeedstudio.com/reTerminal-E1003-p-6731.html

Seeed Technology Co.,Ltd.
9F, Building G3, International E City,
Zhongshanyuan Road, Nanshan, Shenzhen, China

Tel: +86 0755-80695676
Web: www.seeed.cc
Shop: www.seeedstudio.com