XLamp® XM-MR LEDs

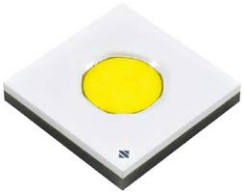

PRODUCT DESCRIPTION

XLamp® XM-MR LEDs expand the XM product family with a round, circular light-emitting surface (LES) version that improves the quality of projected light through optics, compared to traditional LEDs with a square LES. The bottom of the XM-MR LED maintains the same dimensions and footprint as all other XLamp XM LEDs, so it is an easy upgrade path for XM-based designs.

The compact and proven 5.00-mm XM platform has an excellent ecosystem of optics and system solutions available, enabling lighting manufacturers to simplify their design process and shorten time-to-market.

XLamp XM-MR LEDs are optimized for directional portable lighting applications where the best possible beam quality is required.

FEATURES

- Available in 70-CRI white
- ANSI-compatible chromaticity bins
- Binned at 85 °C
- Maximum drive current: 14,000 mA
- Low thermal resistance: 0.6 °C/W
- Wide viewing angle: 120°
- Unlimited floor life at ≤ 30 °C/85% RH
- Reflow solderable - JEDEC J-STD-020C
- Electrically neutral thermal path
- RoHS and REACH compliant
- UL® recognized component (E349212)

TABLE OF CONTENTS

Characteristics 2
Flux Characteristics 3
Relative Spectral Power Distribution 4
Relative Flux vs. Junction Temperature..... 4
Electrical Characteristics..... 5
Relative Luminous Flux vs. Current..... 5
Relative Chromaticity vs. Current and Temperature 6
Typical Spatial Distribution..... 7
Thermal Design 7
Performance Groups - Luminous Flux..... 8
Performance Groups - Chromaticity 8
Cree LED's Standard Cool White Kits Plotted on ANSI Standard Chromaticity Regions..... 9
Cree LED's Standard Chromaticity Kits..... 9
Bin and Order Code Formats..... 10
Reflow Soldering Characteristics..... 11
Notes 12
Mechanical Dimensions 13
Tape and Reel..... 14
Packaging..... 16

Cree LED / 4001 E. Hwy. 54, Suite 2000 / Durham, NC 27713 USA / +1.919.313.5330 / www.cree-led.com

© 2025-2026 Cree LED. The information in this document is subject to change without notice. Cree®, the Cree logo, the Cree LED logo, XLamp®, and EasyWhite® are registered trademarks of Cree LED. UL® and the UL logo are registered trademarks of UL LLC. Other trademarks, product, and company names are the property of their respective owners and do not imply specific product and/or vendor endorsement, sponsorship or association.

CHARACTERISTICS

Characteristics	Unit	Minimum	Typical	Maximum
Thermal resistance, junction to solder point◊	°C/W		0.6	
Viewing angle (FWHM)	degrees		120	
Temperature coefficient of voltage	mV/°C		-1.4	
ESD withstand voltage (HBM per Mil-Std-883D)			Class 3B	
DC forward current (@ 85 °C)*	mA			14,000
Reverse voltage	V			5
Forward voltage (@ 3000 mA, 85 °C)	V		2.95	3.2
LED junction temperature	°C		85	150

Note:

◊ Thermal resistance measurement was performed per the JEDEC JESD51-14 standard. See the Thermal Resistance Measurement application note for more details.

* XM-MR LEDs should be driven at maximum current for only up to 60 seconds at a time, with design measures taken to ensure the junction temperature (Tj) never exceeds the maximum rated value. For applications requiring longer operating lifetimes, please refer to the XLamp LED Reliability Overview application note for guidance on drive currents for which XM-MR LEDs have been tested for hours of continuous operation.

© 2025-2026 Cree LED. The information in this document is subject to change without notice. Cree®, the Cree logo, the Cree LED logo, XLamp®, and EasyWhite® are registered trademarks of Cree LED. UL® and the UL logo are registered trademarks of UL LLC. Other trademarks, product, and company names are the property of their respective owners and do not imply specific product and/or vendor endorsement, sponsorship or association.

FLUX CHARACTERISTICS (T_J = 85 °C)

The following table provides order codes for XLamp XM-MR LEDs. For a complete description of the order code nomenclature, please see the Bin and Order Code Formats section (page 11). For definitions of the chromaticity kits, please see the Cree LED's Standard Chromaticity Kits section (page 9).

Chromaticity		Minimum Luminous Flux (lm) @ 3000 mA			Order Code
Kit	CCT	Code	Flux (lm) @ 85 °C	Flux (lm) @25 °C*	
E1	6500 K	K2	1200	1341	XMMRWA-H0-0000-000BK20E1
		J4	1120	1252	XMMRWA-H0-0000-000BJ40E1
E2	5700 K	K2	1200	1341	XMMRWA-H0-0000-000BK20E2
		J4	1120	1252	XMMRWA-H0-0000-000BJ40E2
E3	5000 K	K2	1200	1341	XMMRWA-H0-0000-000BK20E3
		J4	1120	1252	XMMRWA-H0-0000-000BJ40E3

Notes

- Cree LED maintains a tolerance of ±7% on flux and power measurements, ±0.005 on chromaticity (CCx, CCy) measurements and a tolerance of ±2 on CRI measurements. See the Measurements section (page 12).
- XLamp XM-MR LED order codes specify only a minimum flux bin and not a maximum. Cree LED may ship reels in flux bins higher than the minimum specified by the order code without advance notice. Shipments will always adhere to the chromaticity bin restrictions specified by the order code.

* Flux values @ 25 °C are calculated and for reference only.

© 2025-2026 Cree LED. The information in this document is subject to change without notice. Cree®, the Cree logo, the Cree LED logo, XLamp®, and EasyWhite® are registered trademarks of Cree LED. UL® and the UL logo are registered trademarks of UL LLC. Other trademarks, product, and company names are the property of their respective owners and do not imply specific product and/or vendor endorsement, sponsorship or association.

RELATIVE SPECTRAL POWER DISTRIBUTION

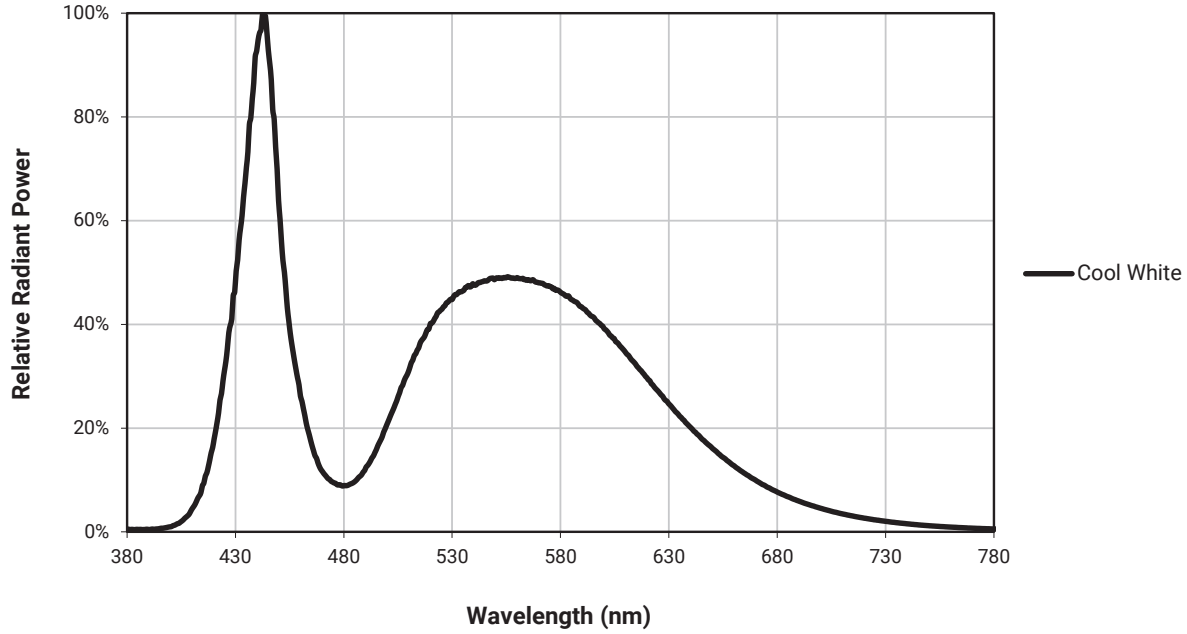

RELATIVE FLUX VS. JUNCTION TEMPERATURE

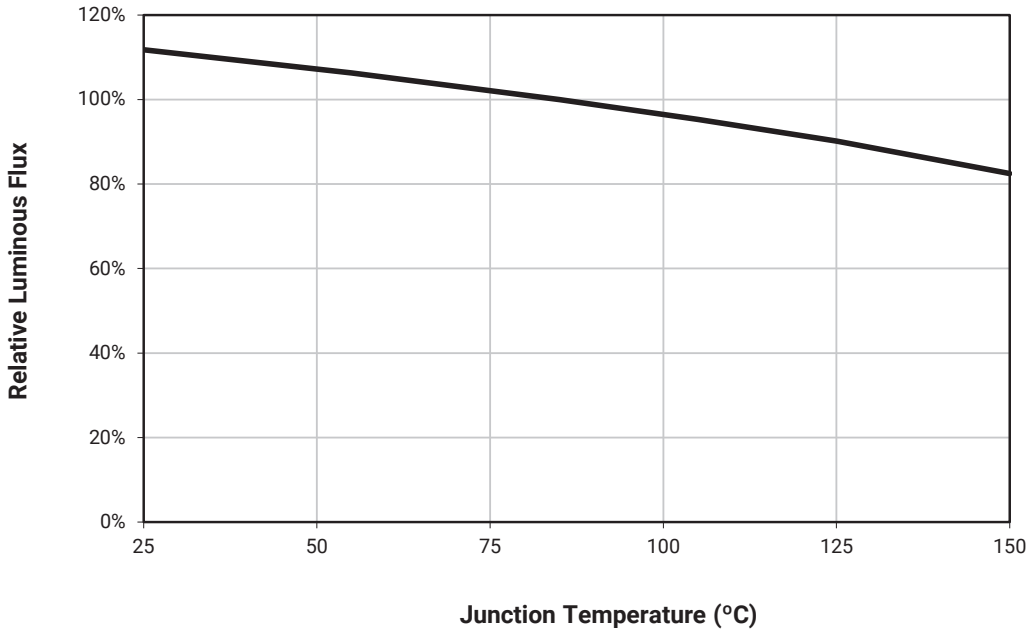

© 2025-2026 Cree LED. The information in this document is subject to change without notice. Cree®, the Cree logo, the Cree LED logo, XLamp®, and EasyWhite® are registered trademarks of Cree LED. UL® and the UL logo are registered trademarks of UL LLC. Other trademarks, product, and company names are the property of their respective owners and do not imply specific product and/or vendor endorsement, sponsorship or association.

ELECTRICAL CHARACTERISTICS (T_J = 85 °C)

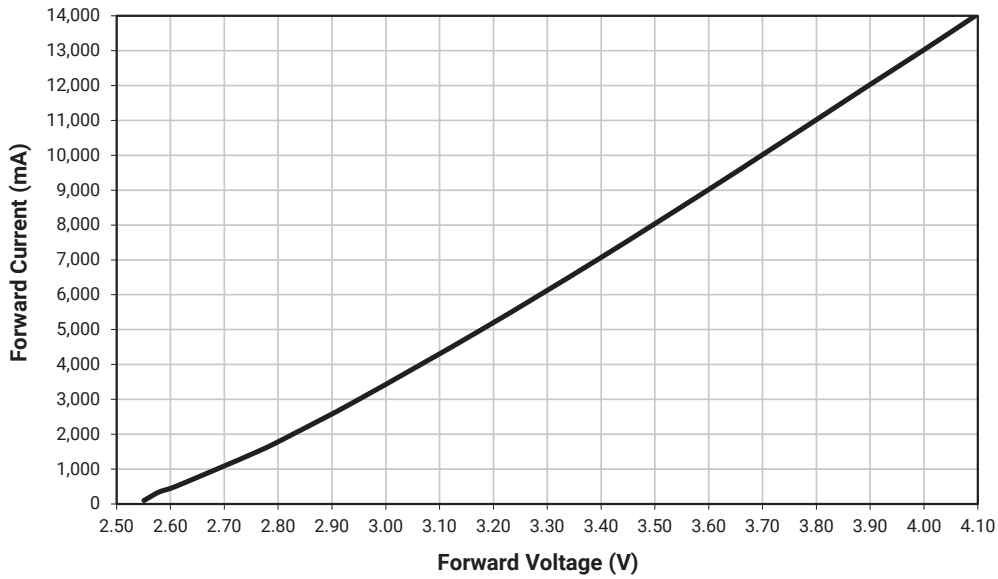

RELATIVE LUMINOUS FLUX VS. CURRENT (T_J = 85 °C)

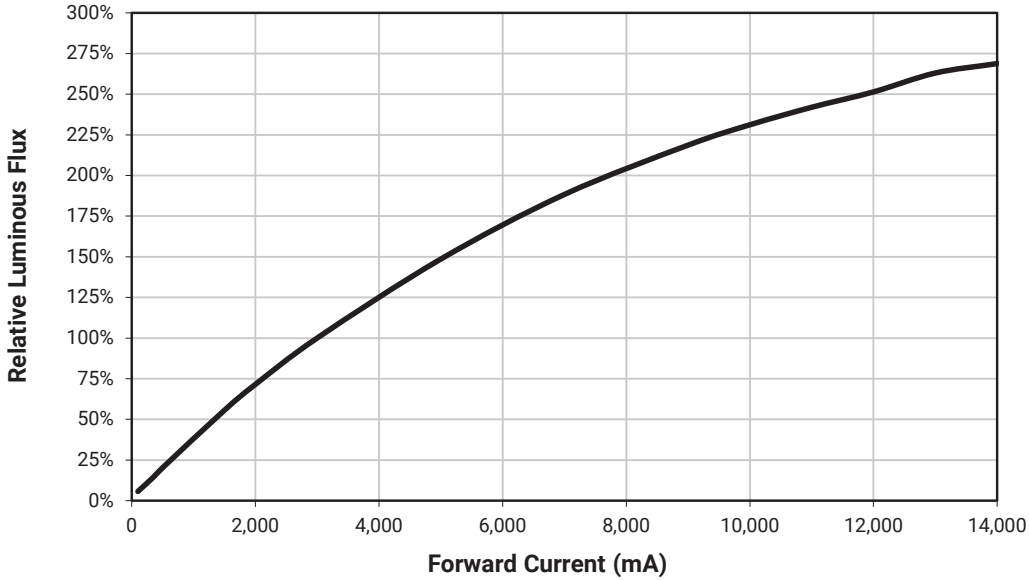

© 2025-2026 Cree LED. The information in this document is subject to change without notice. Cree®, the Cree logo, the Cree LED logo, XLamp®, and EasyWhite® are registered trademarks of Cree LED. UL® and the UL logo are registered trademarks of UL LLC. Other trademarks, product, and company names are the property of their respective owners and do not imply specific product and/or vendor endorsement, sponsorship or association.

RELATIVE CHROMATICITY VS. CURRENT AND TEMPERATURE

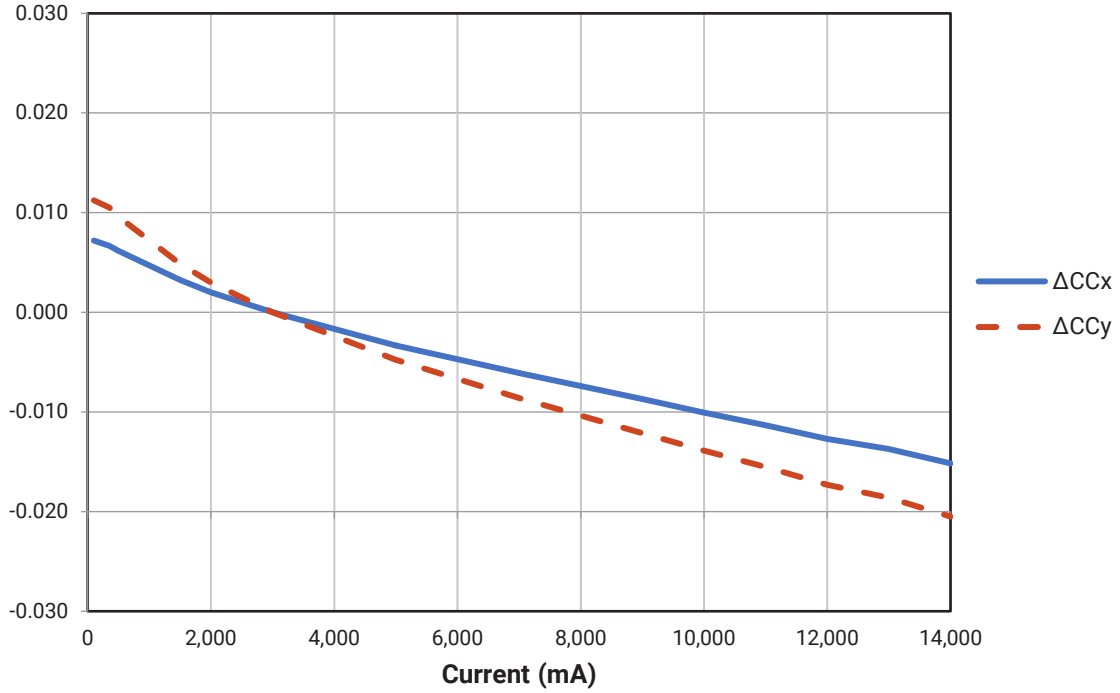

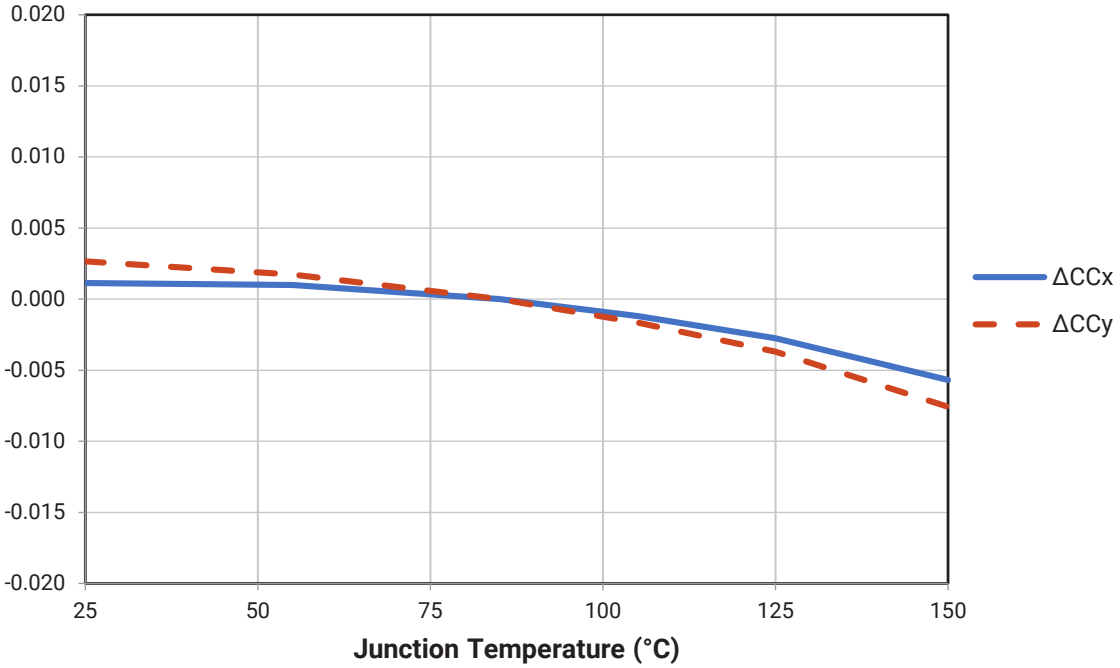

© 2025-2026 Cree LED. The information in this document is subject to change without notice. Cree®, the Cree logo, the Cree LED logo, XLamp®, and EasyWhite® are registered trademarks of Cree LED. UL® and the UL logo are registered trademarks of UL LLC. Other trademarks, product, and company names are the property of their respective owners and do not imply specific product and/or vendor endorsement, sponsorship or association.

TYPICAL SPATIAL DISTRIBUTION

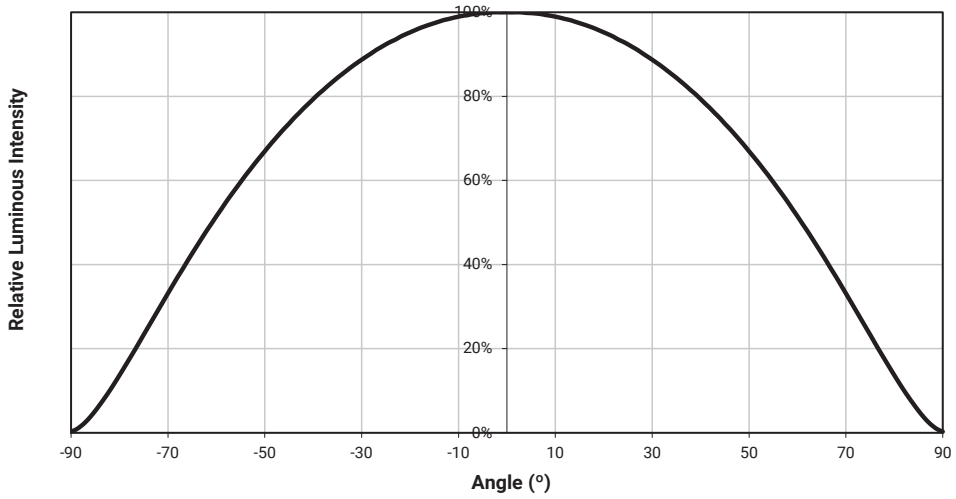

THERMAL DESIGN

The maximum forward current is determined by the thermal resistance between the LED junction and ambient. It is crucial for the end product to be designed in a manner that minimizes the thermal resistance from the solder point to ambient in order to optimize lamp life and optical characteristics.

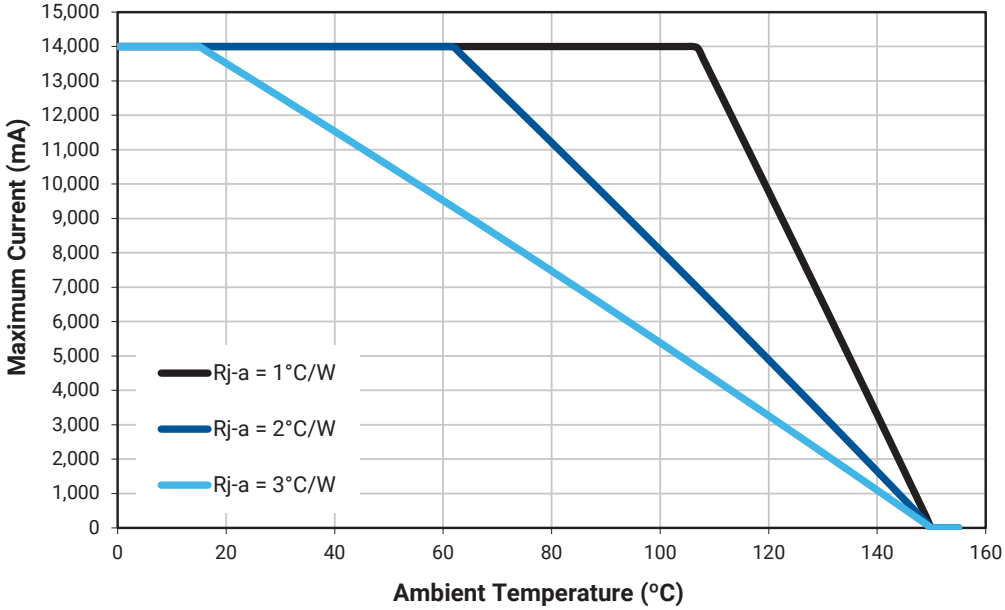

© 2025-2026 Cree LED. The information in this document is subject to change without notice. Cree®, the Cree logo, the Cree LED logo, XLamp®, and EasyWhite® are registered trademarks of Cree LED. UL® and the UL logo are registered trademarks of UL LLC. Other trademarks, product, and company names are the property of their respective owners and do not imply specific product and/or vendor endorsement, sponsorship or association.

PERFORMANCE GROUPS - LUMINOUS FLUX

XLamp XM-MR LEDs are tested for luminous flux and placed into one of the following luminous-flux groups.

Group Code	Minimum Luminous Flux (lm) @ 3000 mA	Maximum Luminous Flux (lm) @ 3000 mA
J4	1120	1200
K2	1200	1290

PERFORMANCE GROUPS - CHROMATICITY

Region	x	y	Region	x	y	Region	x	y	Region	x	y
1A	0.3048	0.3207	1B	0.3028	0.3304	1C	0.3115	0.3391	1D	0.3130	0.3290
	0.3130	0.3290		0.3115	0.3391		0.3205	0.3481		0.3213	0.3373
	0.3144	0.3186		0.3130	0.3290		0.3213	0.3373		0.3221	0.3261
	0.3068	0.3113		0.3048	0.3207		0.3130	0.3290		0.3144	0.3186
2A	0.3215	0.3350	2B	0.3207	0.3462	2C	0.3290	0.3538	2D	0.3290	0.3417
	0.3290	0.3417		0.3290	0.3538		0.3376	0.3616		0.3371	0.3490
	0.3290	0.3300		0.3290	0.3417		0.3371	0.3490		0.3366	0.3369
	0.3222	0.3243		0.3215	0.3350		0.3290	0.3417		0.3290	0.3300
3A	0.3371	0.3490	3B	0.3376	0.3616	3C	0.3463	0.3687	3D	0.3451	0.3554
	0.3451	0.3554		0.3463	0.3687		0.3551	0.3760		0.3533	0.3620
	0.3440	0.3427		0.3451	0.3554		0.3533	0.3620		0.3515	0.3487
	0.3366	0.3369		0.3371	0.3490		0.3451	0.3554		0.3440	0.3427

© 2025-2026 Cree LED. The information in this document is subject to change without notice. Cree®, the Cree logo, the Cree LED logo, XLamp®, and EasyWhite® are registered trademarks of Cree LED. UL® and the UL logo are registered trademarks of UL LLC. Other trademarks, product, and company names are the property of their respective owners and do not imply specific product and/or vendor endorsement, sponsorship or association.

CREE LED'S STANDARD COOL WHITE KITS PLOTTED ON ANSI STANDARD CHROMATICITY REGIONS

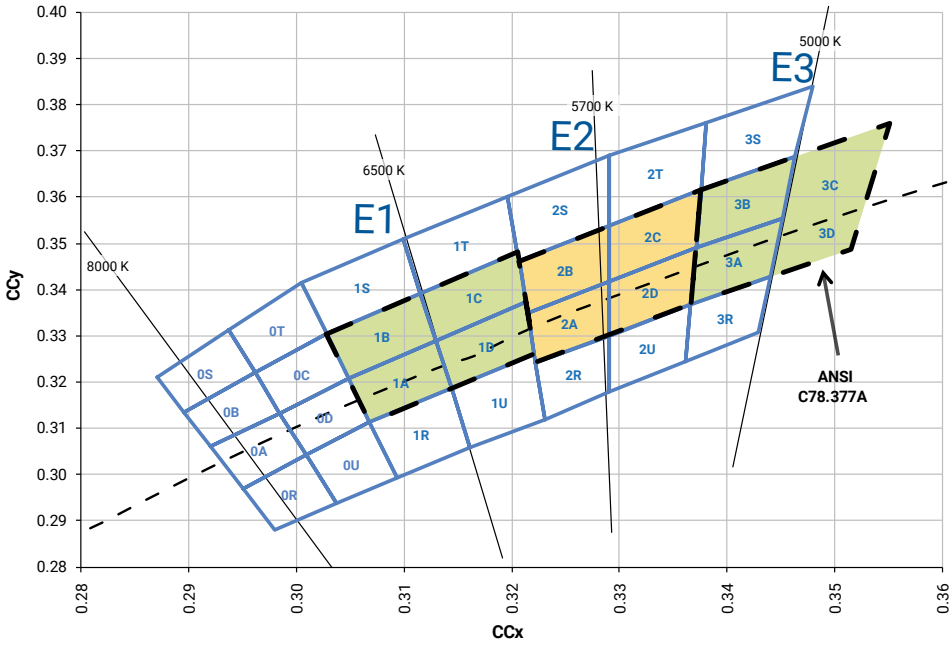

CREE LED'S STANDARD CHROMATICITY KITS

The following table provides the chromaticity bins associated with chromaticity kits.

Color	CCT	Kit	Chromaticity Bins
Cool White	6500 K	E1	1A, 1B, 1C, 1D
	5700 K	E2	2A, 2B, 2C, 2D
	5000 K	E3	3A, 3B, 3C, 3D

© 2025-2026 Cree LED. The information in this document is subject to change without notice. Cree®, the Cree logo, the Cree LED logo, XLamp®, and EasyWhite® are registered trademarks of Cree LED. UL® and the UL logo are registered trademarks of UL LLC. Other trademarks, product, and company names are the property of their respective owners and do not imply specific product and/or vendor endorsement, sponsorship or association.

BIN AND ORDER CODE FORMATS

XM-MR bin codes and order codes are configured in the following manner:

Order Code

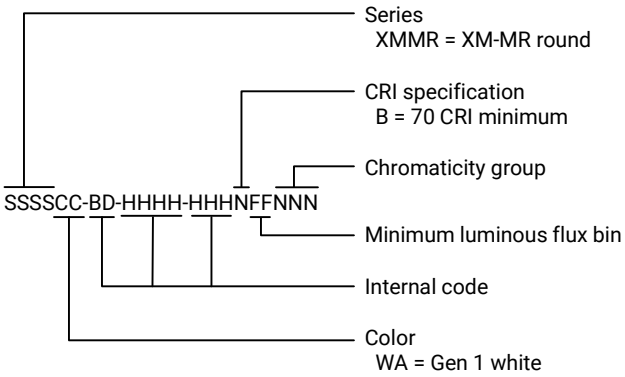

Bin Code

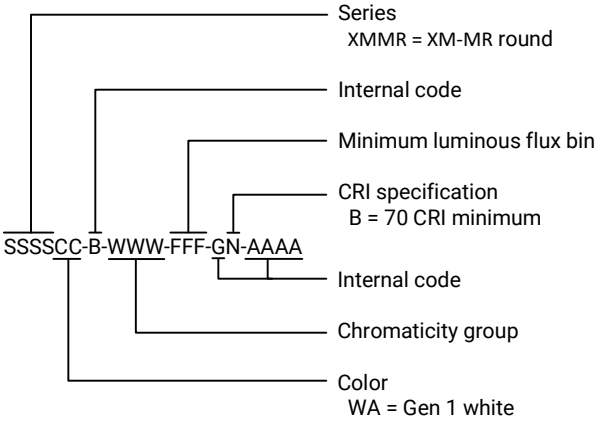

© 2025-2026 Cree LED. The information in this document is subject to change without notice. Cree®, the Cree logo, the Cree LED logo, XLamp®, and EasyWhite® are registered trademarks of Cree LED. UL® and the UL logo are registered trademarks of UL LLC. Other trademarks, product, and company names are the property of their respective owners and do not imply specific product and/or vendor endorsement, sponsorship or association.

REFLOW SOLDERING CHARACTERISTICS

In testing, Cree LED has found XLamp XM-MR LEDs to be compatible with JEDEC J-STD-020C, using the parameters listed below. As a general guideline, Cree LED recommends that users follow the recommended soldering profile provided by the manufacturer of the solder paste used, and therefore it is the lamp or luminaire manufacturer's responsibility to determine applicable soldering requirements.

Note that this general guideline may not apply to all PCB designs and configurations of reflow soldering equipment.

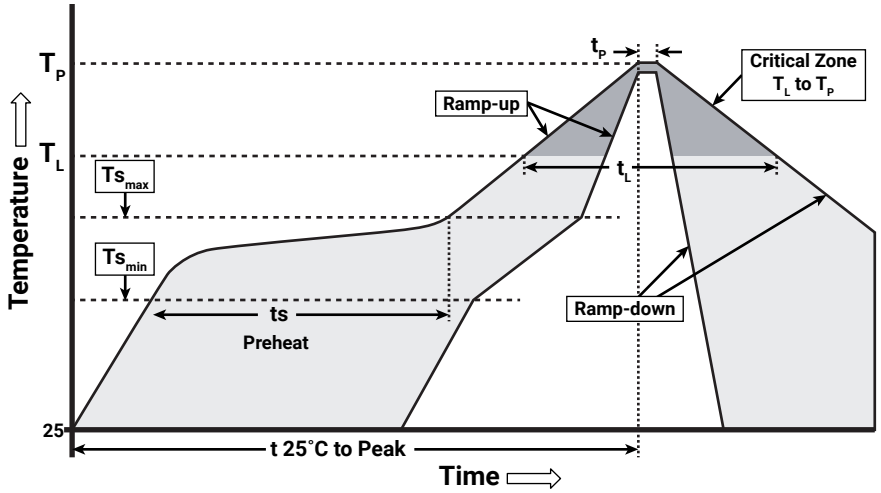

IPC/JEDEC J-STD-020C

Profile Feature	Lead-Free Solder
Average Ramp-Up Rate (Ts_{max} to Tp)	1.2 °C/second
Preheat: Temperature Min (Ts_{min})	120 °C
Preheat: Temperature Max (Ts_{max})	170 °C
Preheat: Time (Ts_{min} to Ts_{max})	65-150 seconds
Time Maintained Above: Temperature (T_L)	217 °C
Time Maintained Above: Time (t_L)	45-90 seconds
Peak/Classification Temperature (Tp)	235 - 245 °C
Time Within 5 °C of Actual Peak Temperature (tp)	20-40 seconds
Ramp-Down Rate	1 - 6 °C/second
Time 25 °C to Peak Temperature	4 minutes max.

Note: All temperatures refer to the topside of the package, measured on the package body surface.

© 2025-2026 Cree LED. The information in this document is subject to change without notice. Cree®, the Cree logo, the Cree LED logo, XLamp®, and EasyWhite® are registered trademarks of Cree LED. UL® and the UL logo are registered trademarks of UL LLC. Other trademarks, product, and company names are the property of their respective owners and do not imply specific product and/or vendor endorsement, sponsorship or association.

NOTES

Measurements

The luminous flux, radiant power, chromaticity, forward voltage and CRI measurements in this document are binning specifications only and solely represent product measurements as of the date of shipment. These measurements will change over time based on a number of factors that are not within Cree LED's control and are not intended or provided as operational specifications for the products. Calculated values are provided for informational purposes only and are not intended or provided as specifications.

Pre-Release Qualification Testing

Please read the LED Reliability Overview for details on the qualification testing performed on XM-MR LEDs.

Moisture Sensitivity

Cree LED recommends keeping XLamp LEDs in the provided, resealable moisture-barrier packaging (MBP) until immediately prior to soldering. Unopened MBPs that contain XLamp LEDs do not need special storage for moisture sensitivity.

Once the MBP is opened, XLamp XM-MR LEDs may be stored as MSL 1 per JEDEC J-STD-033, meaning they have unlimited floor life in conditions of ≤ 30 ºC/85% relative humidity (RH). Regardless of the storage condition, Cree LED recommends sealing any unsoldered LEDs in the original MBP.

RoHS Compliance

The levels of RoHS restricted materials in this product are below the maximum concentration values (also referred to as the threshold limits) permitted for such substances, or are used in an exempted application, in accordance with EU Directive 2011/65/EC (RoHS2), as implemented January 2, 2013. RoHS Declarations for this product can be obtained from your Cree LED representative or from the Product Ecology section of the Cree LED website.

REACH Compliance

REACH substances of very high concern (SVHCs) information is available for this product. Since the European Chemical Agency (ECHA) has published notice of their intent to frequently revise the SVHC listing for the foreseeable future, please contact a Cree LED representative to insure you get the most up-to-date REACH Declaration. REACH banned substance information (REACH Article 67) is also available upon request.

UL® Recognized Component

This product meets the requirements to be considered a UL Recognized Component with Level 4 enclosure consideration. The LED package or a portion thereof has been investigated as a fire and electrical enclosure per ANSI/UL 8750.

Vision Advisory

WARNING: Do not look at an exposed lamp in operation. Eye injury can result. For more information about LEDs and eye safety, please refer to the LED Eye Safety application note.

© 2025-2026 Cree LED. The information in this document is subject to change without notice. Cree®, the Cree logo, the Cree LED logo, XLamp®, and EasyWhite® are registered trademarks of Cree LED. UL® and the UL logo are registered trademarks of UL LLC. Other trademarks, product, and company names are the property of their respective owners and do not imply specific product and/or vendor endorsement, sponsorship or association.

MECHANICAL DIMENSIONS

All measurements are ±.13 mm unless otherwise indicated.

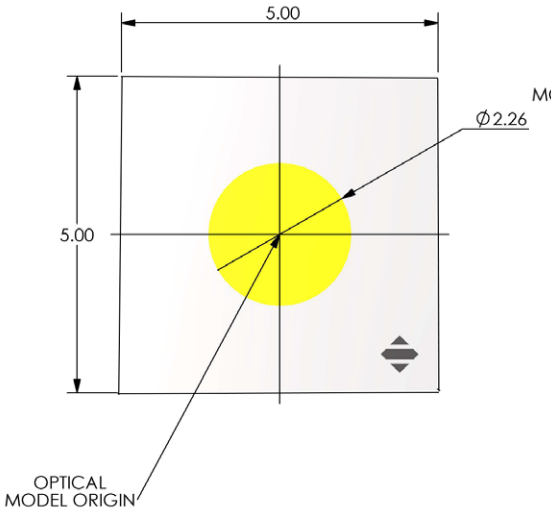

Top View

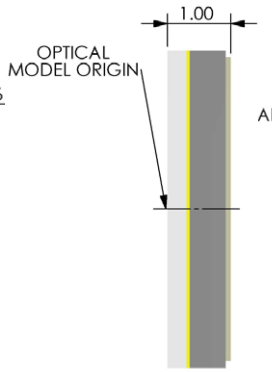

Side View

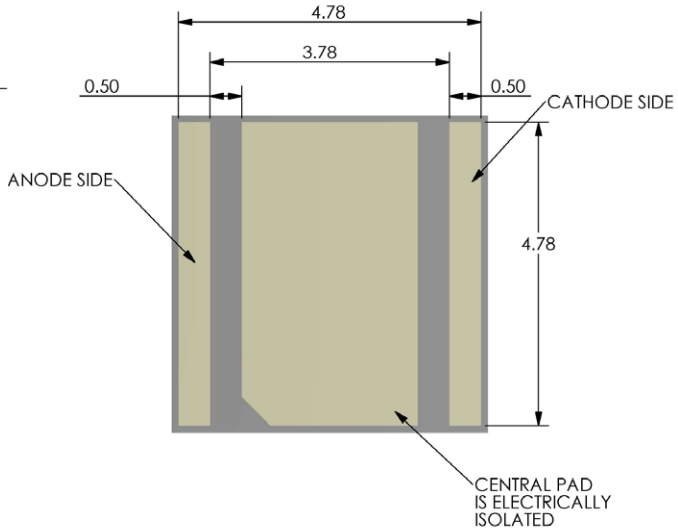

Bottom View

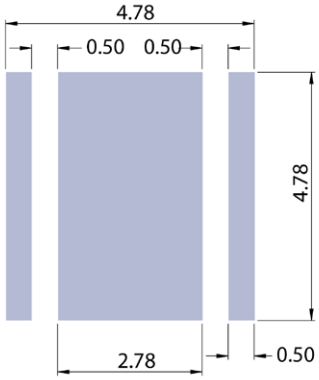

Recommended PCB Footprint

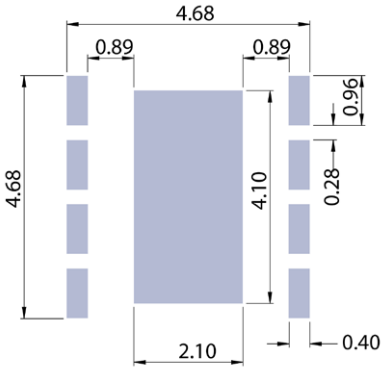

Recommended Solder Stencil*

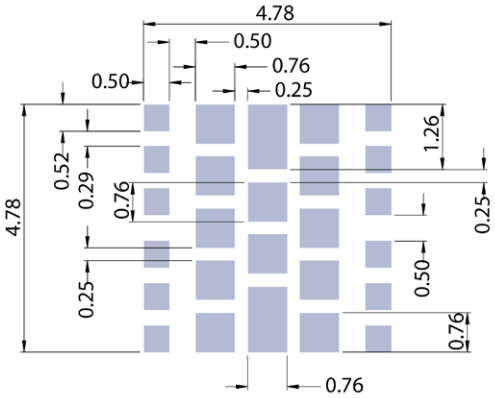

Optional Solder Stencil*

Notes:

- Cree LED recommends using thermal pad kickouts to maximize component thermal performance.
- Cree LED recommends using white solder mask material to minimize system optical loss.

* This stencil has been tested and optimized for the avoidance of voiding when using ALPHA® OM-362 solder paste. For other solder pastes, a “window pane” design for the thermal pad stencil may result in a lower voiding percentage. Contact your local Cree LED representative for consultation regarding your specific application.

© 2025-2026 Cree LED. The information in this document is subject to change without notice. Cree®, the Cree logo, the Cree LED logo, XLamp®, and EasyWhite® are registered trademarks of Cree LED. UL® and the UL logo are registered trademarks of UL LLC. Other trademarks, product, and company names are the property of their respective owners and do not imply specific product and/or vendor endorsement, sponsorship or association.

TAPE AND REEL

All Cree LED carrier tapes conform to EIA-481D, Automated Component Handling Systems Standard.

Except as noted, all dimensions in mm.

All measurements are ±0.15 mm unless otherwise indicated.

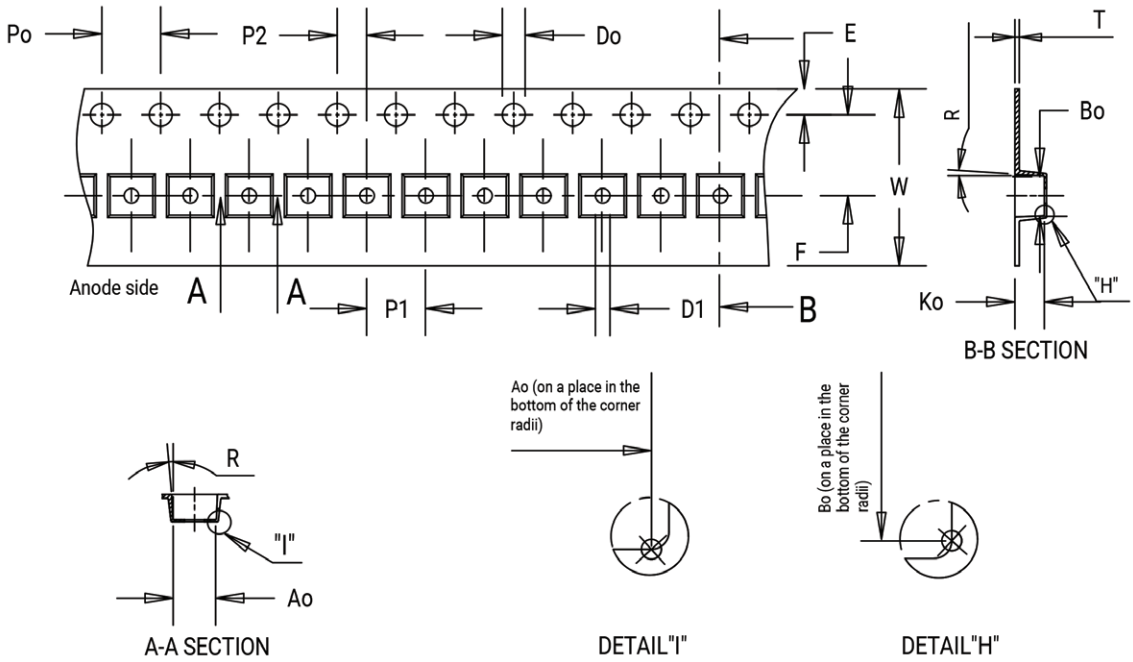

Item	Ao	Bo	Ko	Po	P1	P2	T	E	F	Do	D1	W	R
Dimension	3.70	3.70	1.20	4.00	8.00	2.00	0.30	1.75	5.50	1.50	1.50	12.00	3°

© 2025-2026 Cree LED. The information in this document is subject to change without notice. Cree®, the Cree logo, the Cree LED logo, XLamp®, and EasyWhite® are registered trademarks of Cree LED. UL® and the UL logo are registered trademarks of UL LLC. Other trademarks, product, and company names are the property of their respective owners and do not imply specific product and/or vendor endorsement, sponsorship or association.

TAPE AND REEL - CONTINUED

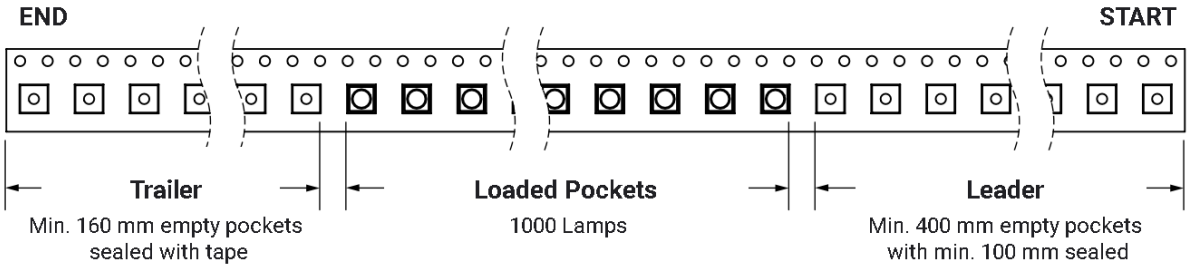

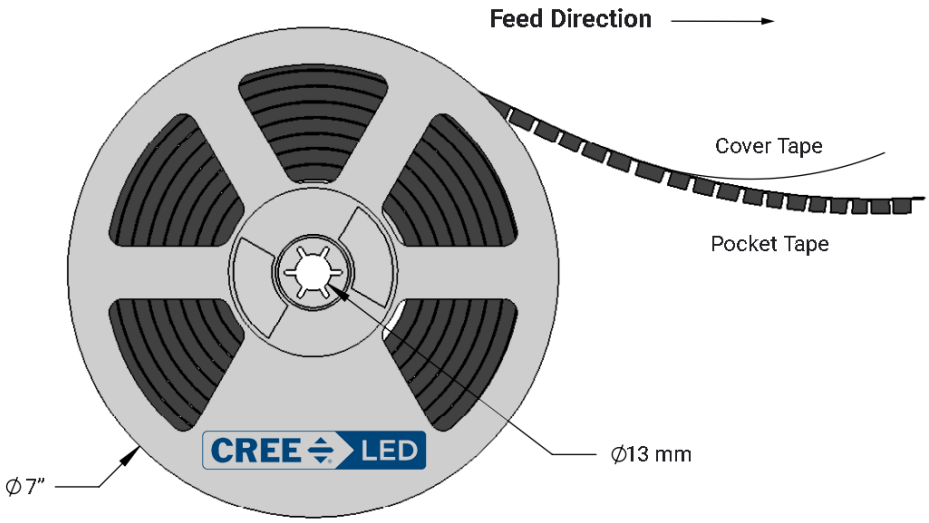

© 2025-2026 Cree LED. The information in this document is subject to change without notice. Cree®, the Cree logo, the Cree LED logo, XLamp®, and EasyWhite® are registered trademarks of Cree LED. UL® and the UL logo are registered trademarks of UL LLC. Other trademarks, product, and company names are the property of their respective owners and do not imply specific product and/or vendor endorsement, sponsorship or association.

PACKAGING

Unpackaged Reel

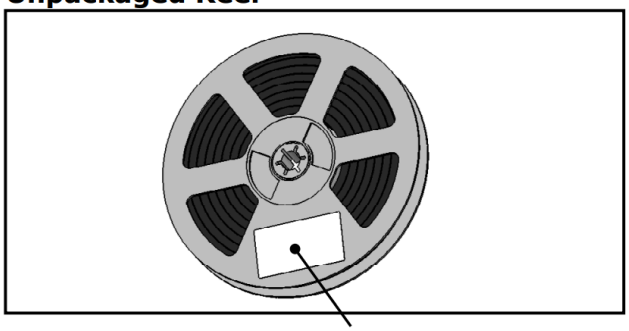

Label with Cree LED Bin Code, Quantity, Reel ID

Packaged Reel

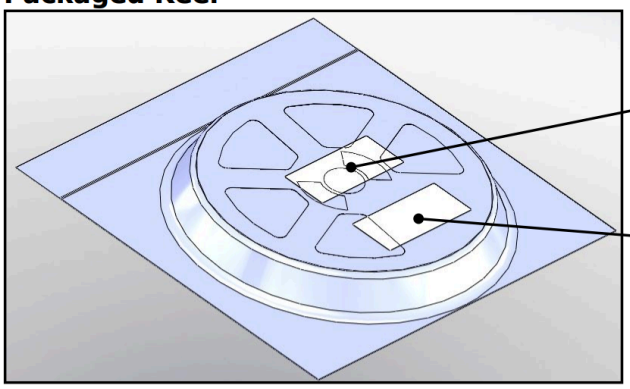

Label with Cree LED Order Code, Quantity, Reel ID, PO#

Label with Cree LED Bin Code, Quantity, Reel ID

Boxed Reel

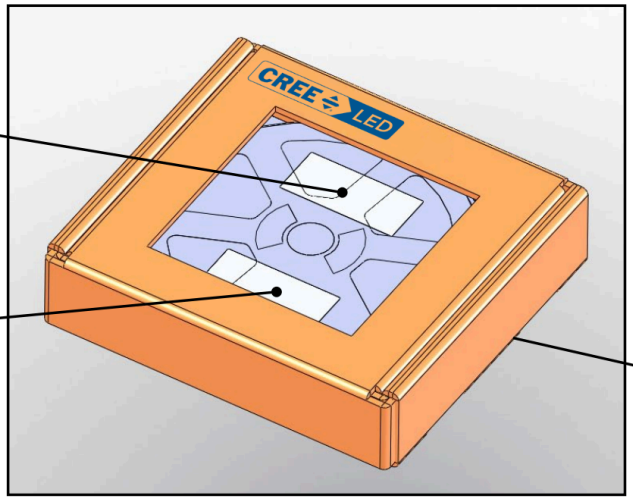

Label with Cree LED Order Code, Quantity, Reel ID, PO#

Label with Cree LED Bin Code, Quantity, Reel ID

Patent Label (on bottom of box)

© 2025-2026 Cree LED. The information in this document is subject to change without notice. Cree®, the Cree logo, the Cree LED logo, XLamp®, and EasyWhite® are registered trademarks of Cree LED. UL® and the UL logo are registered trademarks of UL LLC. Other trademarks, product, and company names are the property of their respective owners and do not imply specific product and/or vendor endorsement, sponsorship or association.