TRACO POWER

DC/DC Converter

TMDC 20 Series, 20 Watt

- **Fully encapsulated low profile plastic case**
- **Ultra wide 4:1 input voltage range**
- **Operating temperature range –40°C to +90°C**
- **I/O isolation 2500 VDC**
- **Excellent efficiency up to 91 %**
- **Input filter to meet EN 55022, class A**
- **Optional DIN-Rail mount adapter**
- **No minimum load required**
- **Power good LED indicator and remote on/off function**
- **3-year product warranty**

UL 62368-1 IEC 62368-1

The TMDC 20 Series is a range of encapsulated high performance DC/DC converter modules. With a very high efficiency of up to 91% and the use of highest grade components these 20 W converters are made for a reliable operation in the temperature range of -40°C up to 90°C. They come in chassis mount version with screw terminal block. The 8 models have a wide 4:1 input voltage range and a tight output voltage regulation. They do not need a minimum load and offer a high efficiency also at low load conditions. They feature a remote control input and a green power good LED which indicates the presence of the output voltage. Protection against overload and short circuit are standard features of these converters. EMC characteristics and safety certifications are aligned for the operation in industrial environment.

Models

Order Code	Input Voltage Range	Output Voltage nom.	Output Current max.	Efficiency typ.
TMDC 20-2411	9 - 36 VDC (24 VDC nom.)	5.1 VDC	4'000 mA	90 %
TMDC 20-2412		12 VDC	1'670 mA	91 %
TMDC 20-2415		24 VDC	835 mA	91 %
TMDC 20-2418		48 VDC	420 mA	89 %
TMDC 20-4811	18 - 75 VDC (48 VDC nom.)	5.1 VDC	4'000 mA	90 %
TMDC 20-4812		12 VDC	1'670 mA	91 %
TMDC 20-4815		24 VDC	835 mA	91 %
TMDC 20-4818		48 VDC	420 mA	89 %

Options

TMP-MK1	- Optional DIN-Rail Mounting Kit: www.tracopower.com/overview/tmp-mk1

Input Specifications

Input Current	- At no load	24 Vin models:	70 mA typ.
		48 Vin models:	35 mA typ.
	- At full load	24 Vin models:	931 mA typ.
		48 Vin models:	466 mA typ.
Surge Voltage		24 Vin models:	50 VDC max. (100 ms max.)
		48 Vin models:	100 VDC max. (100 ms max.)
Under Voltage Lockout		24 Vin models:	7.5 VDC typ.
		48 Vin models:	16 VDC typ.
Recommended Input Fuse			(The need of an external fuse has to be assessed in the final application.)
Input Filter			Internal Pi-Type

Output Specifications

Voltage Set Accuracy			±2% max.
Regulation	- Input Variation (Vmin - Vmax)		0.5% max.
	- Load Variation (0 - 100%)		0.5% max.
Ripple and Noise (20 MHz Bandwidth)		5.1 Vout models:	100 mVp-p max.
		12 Vout models:	150 mVp-p max.
		24 Vout models:	150 mVp-p max.
		48 Vout models:	200 mVp-p max.
Capacitive Load		5.1 Vout models:	6'800 µF max.
		12 Vout models:	1'160 µF max.
		24 Vout models:	300 µF max.
		48 Vout models:	75 µF max.
Minimum Load			Not required
Temperature Coefficient			±0.02 %/K max.
Start-up Time			30 ms max.
Short Circuit Protection			Continuous, Automatic recovery
Output Current Limitation			150% typ. of Iout max.
Overvoltage Protection			120% typ. of Vout nom. (By Zener diode)
Transient Response	- Response Deviation		5% max. (75% to 100% Load Step)
	- Response Time		250 µs typ. (75% to 100% Load Step)

Safety Specifications

Standards	- IT / Multimedia Equipment	CSA-C22.2, No. 60950-1 EN 60950-1 EN 62368-1 IEC 60950-1 IEC 62368-1 UL 60950-1 UL 62368-1
	- Certification Documents	www.tracopower.com/tmdc20-safety-cert
Energy Source	- Output, acc. to 62368-1	ES1
Power Source	- Output, acc. to 62368-1	PS2
Pollution Degree		PD 2
Over Voltage Category		Not mains connected

All specifications valid at nominal voltage, resistive full load and +25°C after warm-up time, unless otherwise stated.

EMC Specifications

EMI (Emissions)			EN 61000-6-4 (Generic Industrial)
			EN 61204-3 (Low Voltage Power Supplies)
	- Conducted Emissions		EN 55032 class A (internal filter)
			FCC 47 Part 15 class A (internal filter)
	- Radiated Emissions		EN 55032 class A (with external filter)
			FCC 47 Part 15 class A (with external filter)
		External filter proposal:	www.tracopower.com/tmdc20-emc-filter
EMS (Immunity)			EN 55024 (IT Equipment)
			EN 55035 (Multimedia)
	- Electrostatic Discharge	Air:	EN 61000-4-2, ±8 kV, perf. criteria A
		Contact:	EN 61000-4-2, ±4 kV, perf. criteria A
	- RF Electromagnetic Field		EN 61000-4-3, 10 V/m, perf. criteria A
	- EFT (Burst) / Surge		EN 61000-4-4, ±2 kV, perf. criteria A
			EN 61000-4-5, ±2 kV, perf. criteria A
	- Conducted RF Disturbances		EN 61000-4-6, 10 Vrms, perf. criteria A
	- PF Magnetic Field	Continuous:	EN 61000-4-8, 30 A/m, perf. criteria A
EMC / Environmental	- Certification Documents		www.tracopower.com/tmdc20-emc-cert

General Specifications

Relative Humidity		95% max. (non condensing)
Temperature Ranges	- Operating Temperature	−40°C to +90°C
	- Case Temperature	+95°C max.
	- Storage Temperature	−50°C to +125°C
Power Derating	- High Temperature	10.0 %/K above 85°C
	See application note:	www.tracopower.com/tmdc20-cc
Cooling System		Natural convection (20 LFM)
Remote Control	- Voltage Controlled Remote (passive = on)	On: 3.5 to 12 VDC or open circuit
		Off: 0 to 1.2 VDC or short circuit
		Refers to 'Remote' and '-Vin' Pin
	- Off Idle Input Current	3 mA typ.
	- Remote Pin Input Current	-0.5 to 0.5 mA
Altitude During Operation		6'000 m max.
Switching Frequency		285 kHz typ. (PWM)
Insulation System		Functional Insulation
Isolation Test Voltage	- Input to Output, 60 s	2'500 VDC
Isolation Resistance	- Input to Output, 500 VDC	1'000 MΩ min.
Isolation Capacitance	- Input to Output, 100 kHz, 1 V	2'200 pF max.
Reliability	- Calculated MTBF	775'200 h (MIL-HDBK-217F, ground benign)
Housing Material		Plastic resin (UL 94 V-0 rated)
Potting Material		Silicone (UL 94 V-0 rated)
Housing Type		Plastic Case
Mounting Type		Chassis Mount
Connection Type		Screw Terminal
Weight		107 g
Thermal Impedance	- Case to Ambient	3.9 K/W typ.
Status Indicator		Indicated by green LED
Environmental Compliance	- REACH Declaration	www.tracopower.com/info/reach-declaration.pdf
		REACH SVHC list compliant
		REACH Annex XVII compliant
	- RoHS Declaration	www.tracopower.com/info/rohs-declaration.pdf
		Exemptions: 6(c), 7(c)-I
		(RoHS exemptions refer to the component concentration only, not to the overall concentration in the product (O5A rule).)
	- SCIP Reference Number	87a413cc-de8d-4661-a038-9e14e0eace68

All specifications valid at nominal voltage, resistive full load and +25°C after warm-up time, unless otherwise stated.

Additional Information

Supporting Documents	www.tracopower.com/overview/tmdc20
Frequently Asked Questions	www.tracopower.com/glossary-faq
Glossary	www.tracopower.com/info/glossary.pdf
Service Portal	www.tracoserviceportal.com

Outline Dimensions

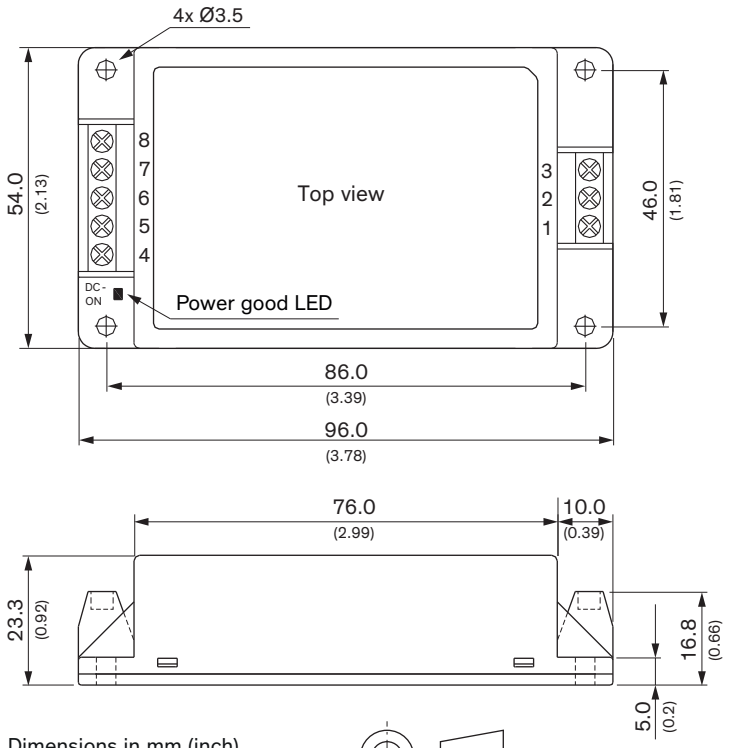

Dimensions in mm (inch)
Tolerances: x.x ±0.5 (±0.02)

Mounting screw locked torque: 0.49 Nm (5.0 kgfcm)

Pinout

Pin*	Function
1	Remote
2	–Vin (GND)
3	+Vin (Vcc)
4	NC
5	–Vout
6	NC
7	+Vout
8	NC

NC: Not connected

Terminal screw locked torque: 0.5 Nm max.

Wire dimension: 1.5 mm^2 max.

Note: The size of the wires has to be assessed in the final application.

© Copyright 2026 Traco Electronic AG