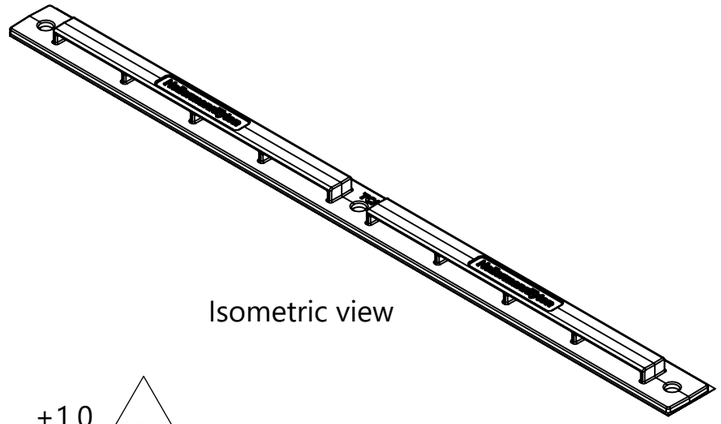

Isometric view

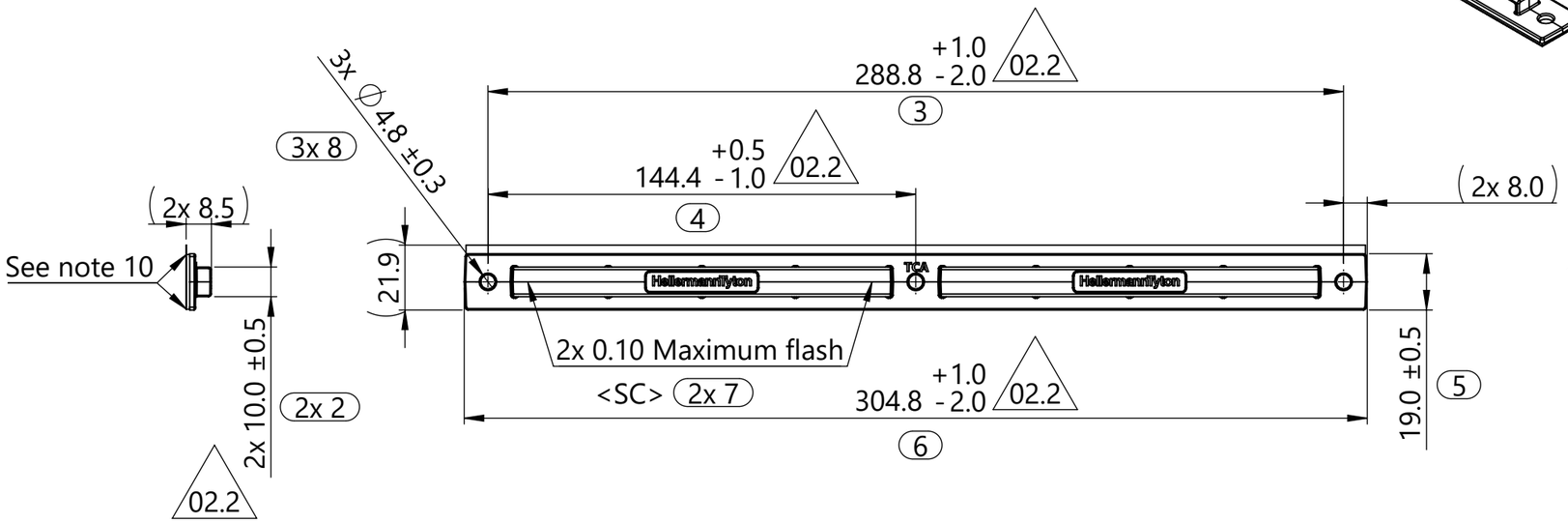

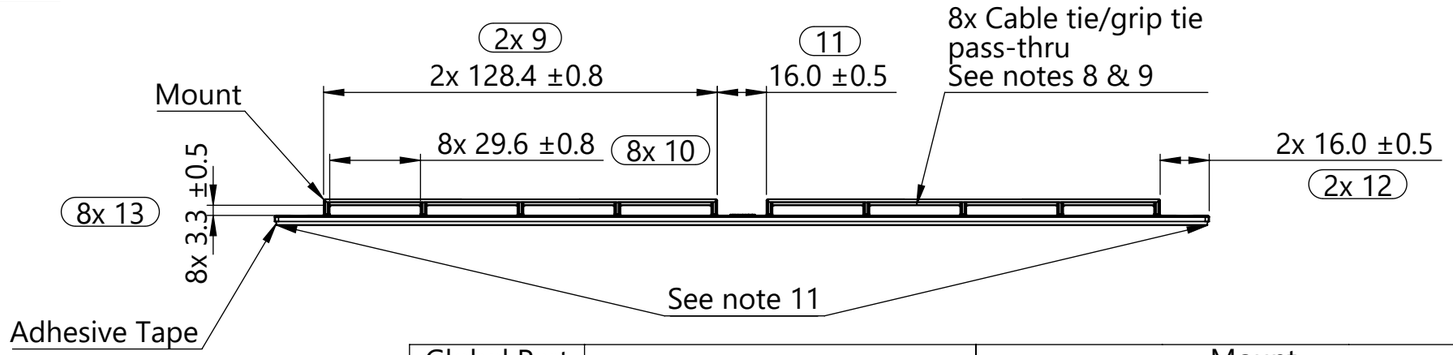

Notes:

1. Material: See chart
2. Material color: See chart
3. Maximum percent regrind permissible: 25%
4. Maximum allowable flash to be: 0.25 mm
5. Maximum allowable mismatch to be: 0.10 mm
6. A dimension without an inspection report symbol ⬭ does not require inspection. It may be controlled on the individual component drawing.
   a. Total number of inspections required: 33
   b. Last number used: 15
   c. Missing symbols: 1
7. Mounting screw size:
   - M4
   - #8 [0.164 in]
8. Accomodates cable tie series: T18 - T120
9. Accomodates 3/8in - 3/4in grip tie: GT.375 - GT.75
10. Tape may be flush or inside the mount edge
11. Tape may be flush or extend beyond the edge of the mount
12. Store product in its original packaging between 4°C to 38°C (40°F to 100°F) and 0-95% relative humidity, the optimum storage conditions are 22°C (72°F) and 50% relative humidity out of direct sunlight

Global Part Number	Part Description	Mount			Adhesive Tape		
		Type	Material	Color	Storage Conditions	Adhesive Material	Color
24-1568	WRMB12AHB-PA66HS-BK	WRMB12AHB	PA66HS	Black (BK)	See note 12	241-002-06 acrylic foam tape (recommended for indoor use only)	Black (BK)
	WRMB12AHB-PA66HS-WH	WRMB12AHB	PA66HS	White (WH)			
24-1569	WRMB12A-PA66HS-BK	WRMB12A	PA66HS	Black (BK)	See note 12	241-001-05 Rubber foam tape (recommended for indoor use only)	White (WH)
	WRMB12A-PA66HS-WH	WRMB12A	PA66HS	White (WH)			

Revision level			Revision Record
Drawing	State	Part	ECN 312456
02.2	Design Release	-	
Changed	Date (YYYY/MM/DD)		
Mann	2025/10/28		
Approved	Date (YYYY/MM/DD)		
Johnson	2025/10/31		

All drawing revision are stored in CAD PDM database

The copyright of this drawing is reserved by HellermannTyton.

Drawn	Spangler	Date (YYYY/MM/DD) 2025/03/14
Approved	Toll	Date (YYYY/MM/DD) 2025/03/14

Units: mm

HellermannTyton
www.HellermannTyton.com

Title: WireRail with adhesive tape, 12 x 0.75 inches

Drawing-No: 24-1568-101-CSU

Scale: 1:2

Global Project Number: 24-1568

Format: A3

Sheet: 1/1