USB Power Delivery 4-Switch Buck Boost Controller

NCV81599, NCP81599

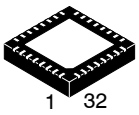

QFN32 5x5, 0.5P
CASE 485CE
(NCP81599)

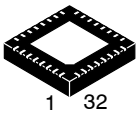

QFNW32 5x5, 0.5P
CASE 484AB
(NCV81599)

The NCV81599 USB Power Delivery (PD) Controller is a synchronous buck boost that is optimized for converting battery voltage or adaptor voltage into power supply rails required in notebook, tablet, and desktop systems, as well as many other consumer devices using USB PD standard and C−Type cables. The NCV81599 is fully compliant to the USB Power Delivery Specification when used in conjunction with a USB PD or C−Type Interface Controller. NCV81599 is designed for applications requiring dynamically controlled slew rate limited output voltage that require either voltage higher or lower than the input voltage. The NCV81599 drives 4 NMOSFET switches, allowing it to buck or boost and support the functions specified in the USB Power Delivery Specification which is suitable for all USB PD applications. The USB PD Buck Boost Controller operates with a supply and load range of 4.5 V to 32 V.

Features

- Wide Input Voltage Range:
  from 4.5 V to 32 V for NCV81599
  from 4.5 V to 30 V for NCP81599
- Dynamically Programmed Frequency from 150 kHz to 1.2 MHz
- I^2C Interface
- Real Time Power Good Indication
- Controlled Slew Rate Voltage Transitioning
- Feedback Pin with Internally Programmed Reference
- Support USBPD/QC2.0/QC3.0 Profile
- 2 Independent Current Sensing Inputs
- Over Temperature Protection
- Adaptive Non−Overlap Gate Drivers
- Audible Range Switching Frequency Avoidance
- Over−Voltage and Over−Current Protection
- AEC−Q100 Qualified (NCV81599)
- 5 x 5 mm QFN32 Package

MARKING DIAGRAM

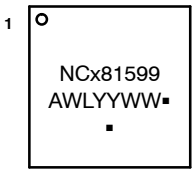

NCx81599 = Specific Device Code
x = V or P
A = Assembly Location
WL = Wafer Lot
YY = Year
WW = Work Week
▪ = Pb−Free Package

(Note: Microdot may be in either location)

Typical Application

- Automotive USB Charging Ports
- Wireless Charging
- Consumer Electronics

ORDERING INFORMATION

Device	Package	Shipping†
NCV81599MWTXG	QFN32 (Pb−Free)	5000 / Tape & Reel
NCP81599MNTXG	QFN32 (Pb−Free)	2500 / Tape & Reel

†For information on tape and reel specifications, including part orientation and tape sizes, please refer to our Tape and Reel Packaging Specification Brochure, BRD8011/D.

© Semiconductor Components Industries, LLC, 2017

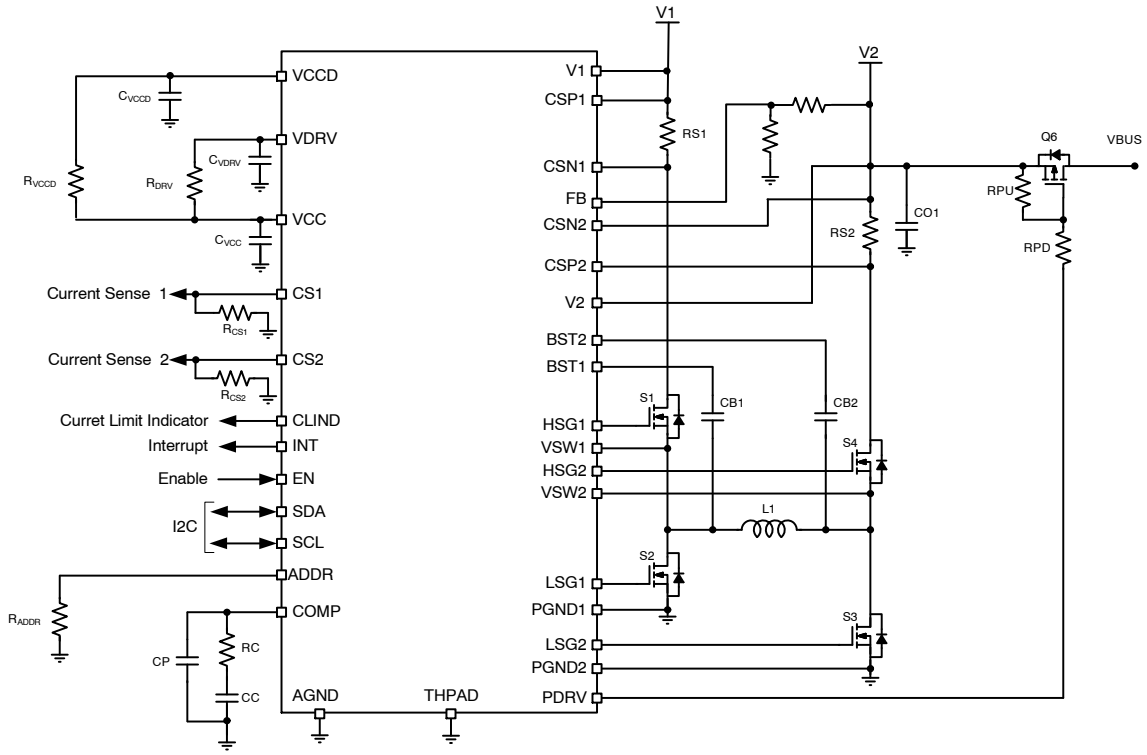

Figure 1. Typical Application Circuit

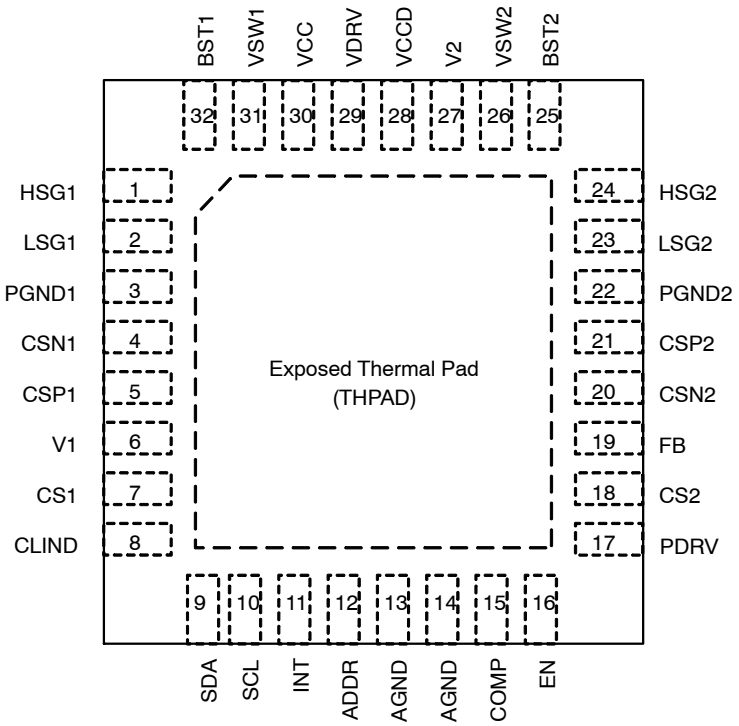

Figure 2. Pinout

Share Feedback
Your Opinion Matters

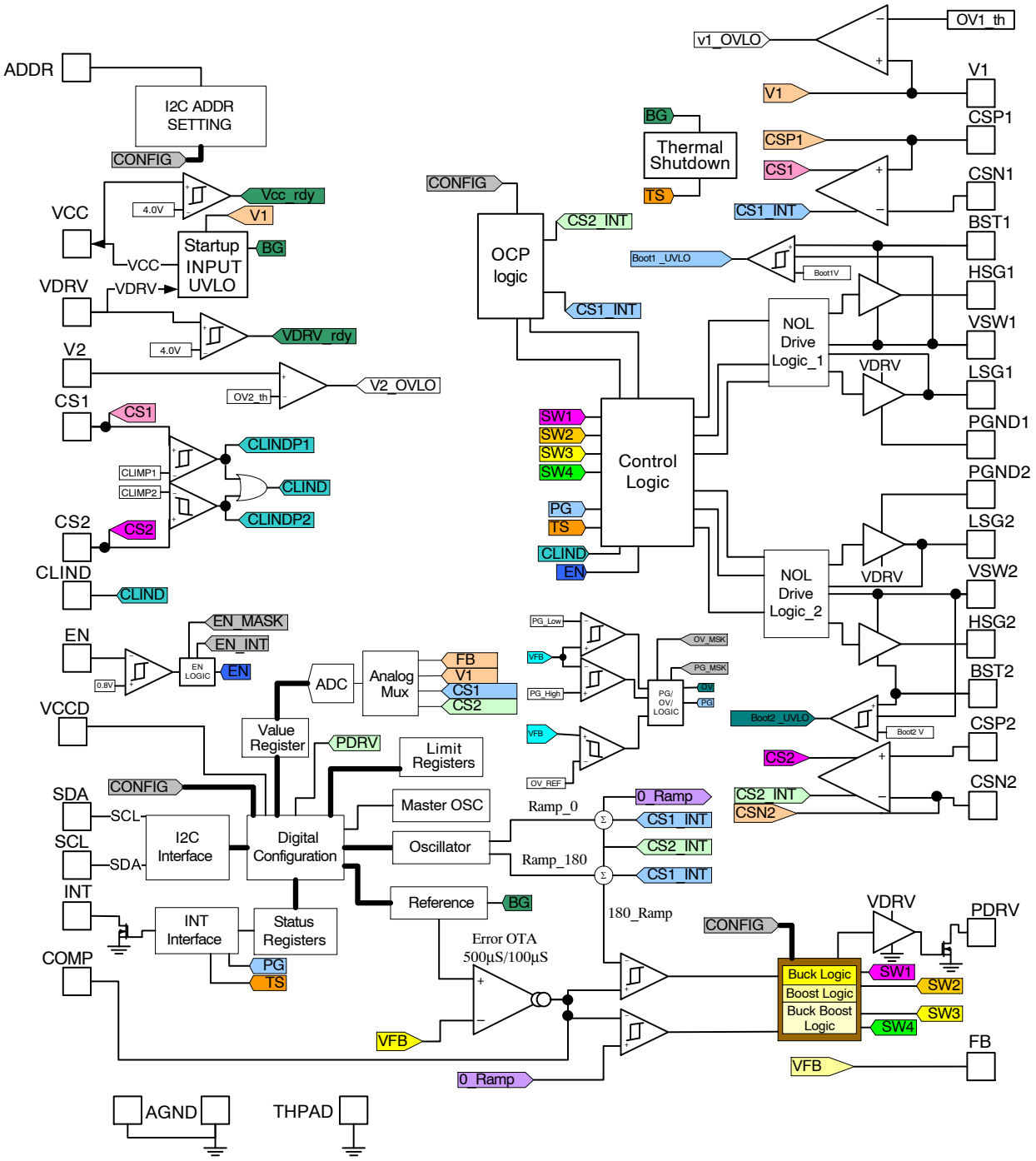

Figure 3. Block Diagram

Share Feedback
Your Opinion Matters

Table 1. PIN FUNCTION DESCRIPTION

Pin	Pin Name	Description
1	HSG1	S1 gate drive. Drives the S1 N−channel MOSFET with a voltage equal to VDRV superimposed on the switch node voltage VSW1.
2	LSG1	Drives the gate of the S2 N−channel MOSFET between ground and VDRV.
3, 22	PGND	Power ground for the low side MOSFET drivers. Connect these pins closely to the source of the bottom N−channel MOSFETs.
4	CSN1	Negative terminal of the current sense amplifier.
5	CSP1	Positive terminal of the current sense amplifier.
6	V1	Input voltage of the converter
7	CS1	Current sense amplifier output. CS1 will source a current that is proportional to the voltage across RS1 to an external resistor. CS1 voltage can be monitored with a high impedance input. Ground this pin if not used.
8	CLIND	Open drain output, high voltage on CLIND pin indicates that the CS1 or CS2 voltage has exceeded the I^2C programmed limit.
9	SDA	I^2C interface data line.
10	SCL	I^2C interface clock line.
11	INT	Interrupt is an open drain output that indicates the state of the output power, the internal thermal trip, and other I^2C programmable functions.
12	ADDR	I^2C address pin, placing a less than 200 kΩ resistor to the ground to set the I^2C address.
13−14	AGND	The ground pin for the analog circuitry.
15	COMP	Output of the transconductance amplifier used for stability in closed loop operation.
16	EN	Logic high enables the switching and logic low shuts down and reset the device. Middle level makes the device to stop switching and keep the VCC alive.
17	PDRV	The open drain output used to control a PMOSFET.
18	CS2	Current sense amplifier output. CS2 will source a current that is proportional to the voltage across RS2 to an external resistor. CS2 voltage can be monitored with a high impedance input. Ground this pin if not used.
19	FB	Feedback voltage of the output, negative terminal of the gm amplifier.
20	CSN2	Negative terminal of the current sense amplifier.
21	CSP2	Positive terminal of the current sense amplifier.
23	LSG2	Drives the gate of the S3 N−channel MOSFET between ground and VDRV.
24	HSG2	S4 gate drive. Drives the S4 N−channel MOSFET with a voltage equal to VDRV superimposed on the switch node voltage VSW2.
25	BST2	Bootstrapped Driver Supply. The BST2 pin swings from a forward voltage drop below VDRV up to a forward voltage drop below VOUT + VDRV. Place a 0.1 μF capacitor from this pin to VSW2.
26	VSW2	Switch Node. VSW2 pin swings from a diode voltage drop below ground up to output voltage.
27	V2	Output voltage of the converter. Connect to the output externally for OVLO sense.
28	VCCD	Internal digital power supply input. Always connect VCCD to VCC. A 1 μF capacitor should be placed close to the part to decouple this line.
29	VDRV	Internal voltage supply to the driver circuits. A 1 μF capacitor should be placed close to the part to decouple this line.
30	VCC	The VCC pin supplies power to the internal circuitry. The VCC is the output of a linear regulator which is powered from V1. Pin should be decoupled with a 1 μF capacitor for stable operation.
31	VSW1	Switch Node. VSW1 pin swings from a diode voltage drop below ground up to V1.
32	BST1	Bootstrapped Driver Supply. The BST1 pin swings from a forward voltage drop below VDRV up to a forward voltage drop below V1 + VDRV. Place a 0.1 μF capacitor from this pin to VSW1.
33	THPAD	Center Thermal Pad. Connect to AGND externally.

Share Feedback
Your Opinion Matters

Table 2. MAXIMUM RATINGS

Over operating free−air temperature range unless otherwise noted

Rating	Symbol	Min	Max	Unit
VCCD Input Voltage	VCCD	−0.3	5.5	V
Address Pin Output Voltage	ADDR	−0.3	5.5	V
Driver Input Voltage	VDRV	−0.3	5.5	V
Internal Regulator Output	VCC	−0.3	5.5	V
Output of Current Sense Amplifiers	CS1, CS2	−0.3	5.5	V
Current Limit Indicator	CLIND	−0.3	VCC + 0.3	V
Interrupt Indicator	INT	−0.3	VCC + 0.3	V
Enable Input	EN	−0.3	5.5	V
I^2C Communication Lines	SDA, SCL	−0.3	VCC + 0.3	V
Compensation Output	COMP	−0.3	VCC + 0.3	V
V1 Power Stage Input Voltage	V1	−0.3	35 V, 40 V (20 ns)	V
Positive Current Sense	CSP1	−0.3	35 V, 40 V (20 ns)	V
Negative Current Sense	CSN1	−0.3	35 V, 40 V (20 ns)	V
Positive Current Sense	CSP2	−0.3	35 V, 40 V (20 ns)	V
Negative Current Sense	CSN2	−0.3	35 V, 40 V (20 ns)	V
Feedback Voltage	FB	−0.3	5.5	V
Driver 1 and Driver 2 Positive Rails	BST1, BST2	−0.3 V wrt/PGND −0.3 V wrt/VSW	40 V 5.5 V wrt/VSW	V
High Side Driver 1 and Driver 2	HSG1, HSG2	−0.3 V wrt/PGND −0.3 V wrt/VSW	40 V 5.5 V wrt/VSW	V
Switching Nodes and Return Path of Driver 1 and Driver 2	VSW1, VSW2	−2.0 V, −5 V (100 ns)	35 V, 40 V (20 ns)	V
Low Side Driver 1 and Driver 2	LSG1, LSG2	−0.3 V	5.5	V
PMOSFET Driver	PDRV	−0.3	35 V, 40 V (20 ns)	V
Voltage Differential	AGND to PGND	−0.3	0.3	V
CSP1−CSN1, CSP2−CSN2 Differential Voltage	CS1DIF, CS2DIF	−0.5	0.5	V
PDRV Maximum Current	PDRVI	0	10	mA
PDRV Maximum Pulse Current (100 ms on time, with > 1 s interval)	PDRVIPUL	0	200	mA
Maximum VCC Current	VCCI	0		mA
Operating Junction Temperature Range (Note 1)	TJ	−40	150	°C
Operating Ambient Temperature Range	TA	−40	125	°C
Storage Temperature Range	TSTG	−55	150	°C
Thermal Characteristics (Note 2) QFN 32 5mm x 5mm Maximum Power Dissipation @ TA = 25°C Maximum Power Dissipation @ TA = 85°C Thermal Resistance Junction−to−Air with Solder Thermal Resistance Junction−to−Case Top with Solder Thermal Resistance Junction−to−Case Bottom with Solder	 PD PD RΘJA RΘJCT RΘJCB	 4.1 2.1 30 1.7 2.0		 W W °C/W °C/W °C/W
Lead Temperature Soldering (10 sec): Reflow (SMD styles only) Pb−Free (Note 3)	RF	260 Peak		°C

Stresses exceeding those listed in the Maximum Ratings table may damage the device. If any of these limits are exceeded, device functionality should not be assumed, damage may occur and reliability may be affected.

1. The maximum package power dissipation limit must not be exceeded.
2. The value of ΘJA is measured with the device mounted on a 3in x 3in, 4 layer, 0.062 inch FR−4 board with 1.5 oz. copper on the top and bottom layers and 0.5 ounce copper on the inner layers, in a still air environment with T_A = 25°C.
3. 60−180 seconds minimum above 237°C.

Share Feedback
Your Opinion Matters

Table 3. ELECTRICAL CHARACTERISTICS
(V1 = 12 V, V_{out} = 5 V , T_A = +25°C for typical value; −40°C < T_A = T_J < 125°C for min/max values unless noted otherwise)

Parameter	Symbol	Test Conditions	Min	Typ	Max	Units
POWER SUPPLY						
V1 Operating Input Voltage	V1	NCV81599	4.5		32	V
		NCP81599	4.5		30	
VDRV Operating Input Voltage	VDRV		4.5	5	5.5	V
VCCD Operating Input Voltage	VCCD		4.5		5.5	V
VCC UVLO Rising Threshold	VCC_{RISE}		4.21	4.27	4.35	V
VCC UVLO Falling Threshold	VCC_{FALL}		3.90	3.96	4.06	V
UVLO Hysteresis for VCC	$VCCV_{HYS}$	Falling Hysteresis		300		mV
VDRV UVLO Rising Threshold	$VDRV_{RISE}$		4.21	4.31	4.35	V
VDRV UVLO Falling Threshold	$VDRV_{FALL}$		3.90	4.01	4.06	V
VDRV UVLO Hysteresis	$VDRV_{HYS}$			300		mV
VCC Output Voltage	VCC	With no external load	4.5	5		V
VCC Drop Out Voltage	VCCDROOP	30 mA load		100		mV
VCC Output Current Limit	$IOUT_{VCC}$	VCC Loaded to 4.3 V, EN > 0.8 V	80	97		mA
VCC Short Current Limit	IVCC_SHORT	VCC short		14.6		mA
V1 Shutdown Supply Current	IVCC_SD	EN < 0.4 V, V1 = 12 V		8.0	15	μA
V1 Normal Current	IV1	0.8 V < EN < 1.88 V, 4.5 V ≤ V1 ≤ 32 V, (No Switching)		7.3		mA
VCCD Standby Current	IVCCD	0.8 V < EN < 1.88 V		4		mA
VCCD Switching Current	IVCCD_SW	EN > 2.2 V		4.1		mA
VDRIVE Switching Current Buck	IV1_SW	EN = 5 V, Cgate = 2.2 nF, VSW = 0 V, FSW = 600 kHz		16		mA
VDRIVE Switching Current Boost	IV1_SW	EN = 5 V, Cgate = 2.2 nF, VSW = 0 V, FSW = 600 kHz		15		mA
VOLTAGE OUTPUT						
Voltage Output Accuracy	FB	DAC_TARGET = 00110010 DAC_TARGET = 01111000 DAC_TARGET = 11001000	0.495 1.188 1.98	0.5 1.2 2.0	0.505 1.212 2.02	V
Voltage Accuracy Over Temperature	VOUTERT	VFB ≥ 0.5 V VFB < 0.5 V	−1.0 −5		1.0 5	% mV
	VOUTER	T_A = 25°C VFB ≥ 0.5 V	 −0.45		 0.45	%
TRANSCONDUCTANCE AMPLIFIER						
Gain Bandwidth Product	GBW	(Note 4)		5.2		MHz
Transconductance	GM1	Default		500		μS
Max Output Source Current limit	GMSOC		60	80		μA
Max Output Sink Current limit	GMSIC		60	80		μA
Voltage Ramp	Vramp			1.2		V
INTERNAL BST SWITCH						
Pass FET Rds(on)	RBST	I_F = 1 mA		60		Ω
Reverse Leakage Current from BST pin to VDRV pin	DIL	BST = 32 V, T_A = 25°C		0.05	1	μA
BST−VSW UVLO	BST_{UVLO}	Falling	3.2	3.5	3.8	V
BST−VSW UVLO	BST_{UVLO}	Rising	3.4	3.7	4.1	V

4. Ensured by design. Not production tested.
5. Typical value only. Not production tested.

Share Feedback
Your Opinion Matters

Table 3. ELECTRICAL CHARACTERISTICS (continued)
(V1 = 12 V, V_{out} = 5 V , T_A = +25°C for typical value; −40°C < T_A = T_J < 125°C for min/max values unless noted otherwise)

Parameter	Symbol	Test Conditions	Min	Typ	Max	Units
INTERNAL BST SWITCH						
BST−VSW Hysteresis	BST_{HYS}	(Note 4)		200		mV
OSCILLATOR						
Oscillator Frequency	FSW_0	FSW = 001 (Note 5)		150		kHz
		FSW = 000, default	552	600	648	
		FSW = 010		300		
		FSW = 011		450		
		FSW = 100		740		
		FSW = 101		880		
		FSW = 110		1145		
Oscillator Frequency Accuracy	FSWE		−12		12	%
Minimum On Time	MOT	Measured at 10% to 90% of VCC (Note 4)		100		ns
Minimum Off Time	MOFT	Measured at 90% to 10% of VCC (Note 4)		100		ns
Minimum Switching Frequency	F_{MIN}		30	45	60	kHz
INT THRESHOLDS						
Interrupt Low Voltage	VINTI	IINT(sink) = 2 mA			0.2	V
Interrupt High Leakage Current	INII	5 V		3	100	nA
Interrupt Startup Delay	INTPG	Soft Start end to PG positive edge		2.1		ms
Interrupt Propagation Delay	PGI	Delay for power good in		3.3		ms
	PGO	Delay for power good out		100		ns
Power Good Threshold	PGTH	Power Good in from falling Power Good out from falling		104 93		%
	PGTH	Power Good out from rising Power Good in from rising		106 95		%
FB Overvoltage Threshold	FB_OV	V_{FB} = 0.5 V	112	115	117	%
		V_{FB} = 1.3 V	112	115	118	
Overvoltage Propagation Delay	VFB_OVDL			1 Cycle		
EXTERNAL CURRENT SENSE (CS1,CS2)						
Positive Current Measurement High	CS10	CSP1−CSN1 or CSP2−CSN2 = 25 mV		125		μA
Transconductance Gain Factor	CSGT	Current Sense Transconductance Vsense = 10 mV to 100 mV		5		mS
Transconductance Deviation	CSGE	CSPx−CSNx = 10 mV	−30		30	%
		CSPx−CSNx = 25 mV to 100 mV	−20		20	
Input Current Sense Common Mode Range	CSCMMR_I	CSP1 is tied to V1	4.5		32	V
Output Current Sense Common Mode Range	CSCMMR_O		4		25.5	V
Input Sense Voltage Full Scale	ISVFS	(Note 4)			100	mV
CS Output Voltage Range	CSOR	VSENSE = 100 mV Rset = 6k (Note 4)	0		3	V
EXTERNAL CURRENT LIMIT (CLIND)						
Current Limit Indicator Output Low	CLINDL	Input current = 500 μA		7.0	100	mV
Current Limit Indicator Output High Leakage Current	ICLINDH	Pull up to 5 V		65	100	nA

4. Ensured by design. Not production tested.
5. Typical value only. Not production tested.

Share Feedback
Your Opinion Matters

Table 3. ELECTRICAL CHARACTERISTICS (continued)
(V1 = 12 V, V_{out} = 5 V , T_A = +25°C for typical value; −40°C < T_A = T_J < 125°C for min/max values unless noted otherwise)

Parameter	Symbol	Test Conditions	Min	Typ	Max	Units
INTERNAL CURRENT SENSE						
Internal Current Sense Gain for PWM	ICG	CSPx−CSNx = 25 mV	9.4	10	10.5	V/V
Positive Peak Current Limit Trip	PPCLT	CLIP = 00 (default) CLIP = 01 CLIP = 10 CLIP = 11	34	39 23 11 70	44	mV
Positive Peak Current Limit Latch−off	OCP_L	CLIP = 00 (default) CLIP = 01 CLIP = 10 CLIP = 11		70 39 23 106		mV
Negative Valley Current Limit Trip	NVCLT	CLIN = 00 (default) CLIN = 01 CLIN = 10 CLIN = 11	34	40 25 15 0	45	mV
SWITCHING MOSFET DRIVERS						
HSG1 Pullup Resistance	HSG1_PU	BST−VSW = 5 V		2		Ω
HSG1 Pulldown Resistance	HSG1_PD	BST−VSW = 5 V		0.8		Ω
LSG1 Pullup Resistance	LSG1_PU	LSG −PGND = 5 V		2.4		Ω
LSG1 Pulldown Resistance	LSG1_PD	LSG −PGND = 5 V		0.7		Ω
HSG2 Pullup Resistance	HSG2_PU	BST−VSW = 5 V		2.7		Ω
HSG2 Pulldown Resistance	HSG2_PD	BST−VSW = 5 V		0.9		Ω
LSG2 Pullup Resistance	LSG2_PU	LSG −PGND = 5 V		2.0		Ω
LSG2 Pulldown Resistance	LSG2_PD	LSG −PGND = 5 V		0.7		Ω
HSG1 Falling to LSG1 Rising Delay	HSLSD1			16		ns
LSG1 Falling to HSG1 Rising Delay	LSHSD1			36		ns
HSG2 Falling to LSG2 Rising Delay	HSLSD2			35		ns
LSG2 Falling to HSG2 Rising Delay	LSHSD2			56		ns
SLEW RATE/SOFT START						
Charge Slew Rate (VOUT measured at V2 pin)	SLEWP	Slew = 00, FB = 0.1 VOUT Slew = 01, FB = 0.1 VOUT Slew = 10, FB = 0.1 VOUT Slew = 11, FB = 0.1 VOUT		0.6 1.2 2.4 4.8		mV/μs
Discharge Slew Rate (VOUT measured at V2 pin)	SLEWN	Slew = 00, FB = 0.1 VOUT Slew = 01, FB = 0.1 VOUT Slew = 10, FB = 0.1 VOUT Slew = 11, FB = 0.1 VOUT		−0.6 −1.2 −2.4 −4.8		mV/μs
ENABLE						
EN LDO High Threshold Voltage	ENLDOHT			770	810	mV
EN LDO Low Threshold Voltage	ENLDOLT		530	570		mV
EN Switching High Threshold Voltage	ENHT			2.15		V
EN Switching Low Threshold Voltage	ENLT		1.65	1.87		V
EN Pull Up Current (Default on)	IEN_UP	EN = 0.8 V		3.0		μA
ADDR						
Internal Current Source	IADDR		9	10	11	μA
ADDR0		ADDR = 74 H			110	mV
ADDR1		ADDR = 75 H	220	260	300	mV
ADDR2		ADDR = 76 H	380	440	500	mV

4. Ensured by design. Not production tested.
5. Typical value only. Not production tested.

Share Feedback
Your Opinion Matters

Table 3. ELECTRICAL CHARACTERISTICS (continued)
(V1 = 12 V, V_{out} = 5 V , T_A = +25°C for typical value; −40°C < T_A = T_J < 125°C for min/max values unless noted otherwise)

Parameter	Symbol	Test Conditions	Min	Typ	Max	Units
ADDR						
ADDR3		ADDR = 77 H	600	715	830	mV
I²C INTERFACE						
Voltage Threshold Rising	I2CVTH_R			1.2		V
Voltage Threshold Falling	I2CVTH_F			0.9		V
Communication Speed	I2CSP				1	MHz
THERMAL SHUTDOWN						
Thermal Shutdown Threshold	TSD	(Note 4)		151		°C
Thermal Shutdown Hysteresis	TSDHYS	(Note 4)		28		°C
PDRV						
PDRV Operating Range			0		32	V
PDRV Leakage Current	PDRV_IDS	FET OFF, VPDRV = 32 V		180		nA
PDRV Drain−Source Voltage	PDRV_VDS	ISNK = 10 mA		0.20		V
INTERNAL ADC						
Range	ADCRN	(Note 4)	0		2.55	V
LSB Value	ADCLSB	(Note 4)		20		mV
Error	ADCFE	(Note 4)		1		LSB
INPUT OVLO						
Input OVLO Rising Threshold	V_{OVLOIN_R}			34		V
Input OVLO Falling Threshold	V_{OVLOIN_F}			28.5		V
Input OVLO Debounce Time		(Note 4)		2		μs
Input OVLO Recover Debounce Time		(Note 4)		1		ms
OUTPUT OVLO						
Output OVLO Threshold (Register 06h, bit [5:4])	V_{OVLO_O}	sel_v2th = 00 sel_v2th = 01 sel_v2th = 10 (Default) sel_v2th = 11		15 22.5 30 36		V
Output OVLO Debounce Time		(Note 4)		1		μs

4. Ensured by design. Not production tested.
5. Typical value only. Not production tested.

Product parametric performance is indicated in the Electrical Characteristics for the listed test conditions, unless otherwise noted. Product performance may not be indicated by the Electrical Characteristics if operated under different conditions.

Share Feedback
Your Opinion Matters

TYPICAL CHARACTERISTICS

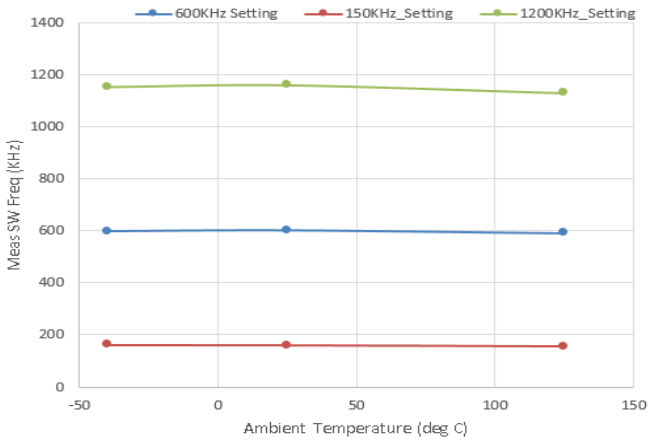

Figure 1. Switching Frequency vs. Temperature

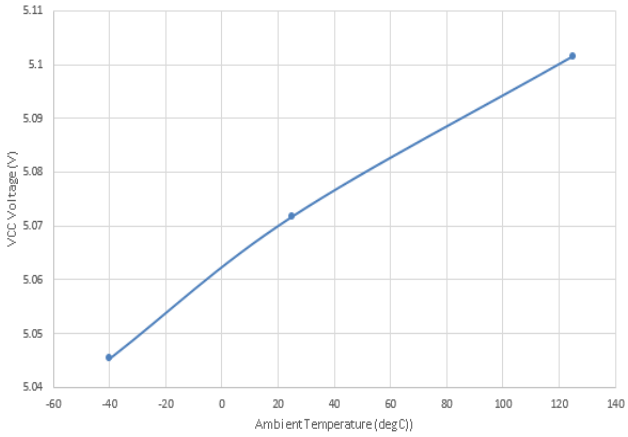

Figure 2. VCC vs. Temperature

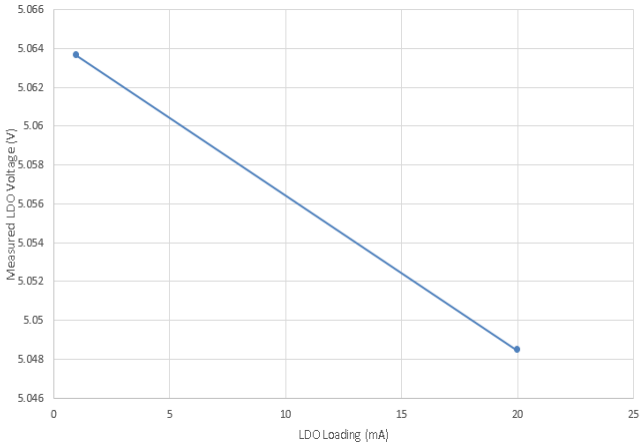

Figure 3. VCC Load Regulation

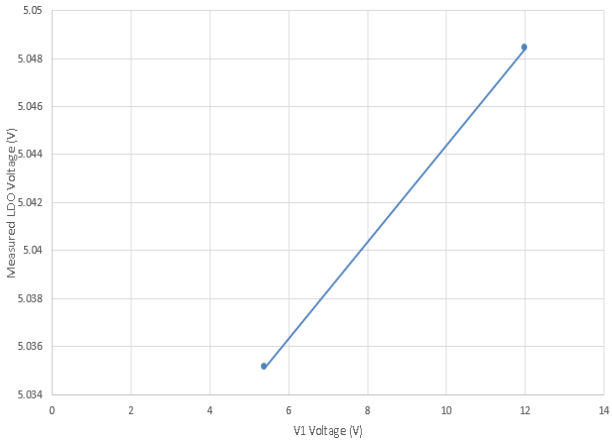

Figure 4. VCC Line Regulation (20 mA Load)

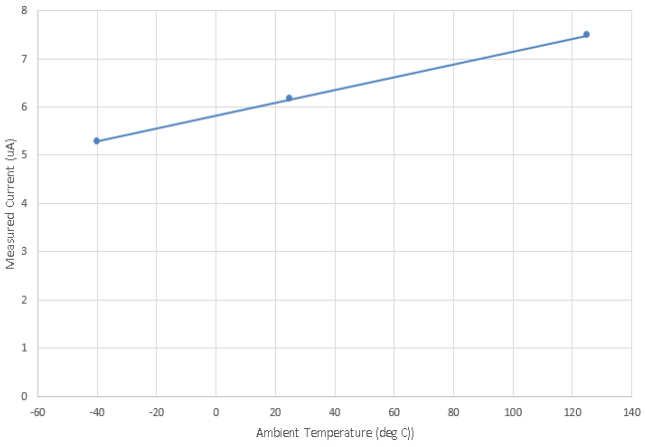

Figure 5. Shutdown Supply Current vs. Temperature

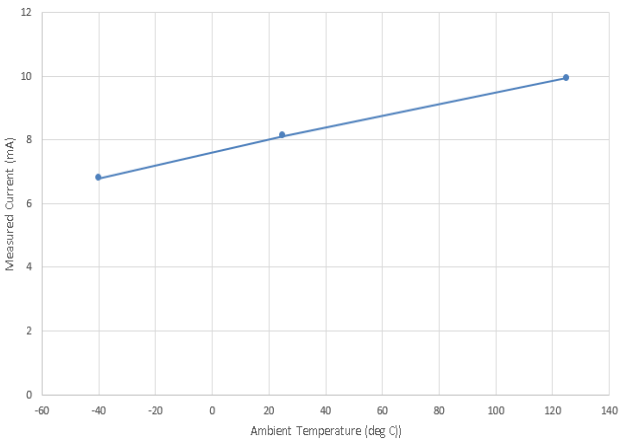

Figure 6. V1 Normal Current vs. Temperature

Share Feedback
Your Opinion Matters

TYPICAL CHARACTERISTICS

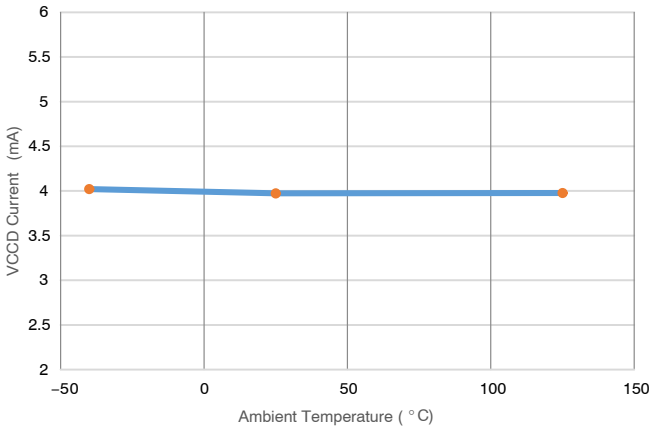

Figure 7. VCCD Current vs. Temperature, VCCD = 5.0 V

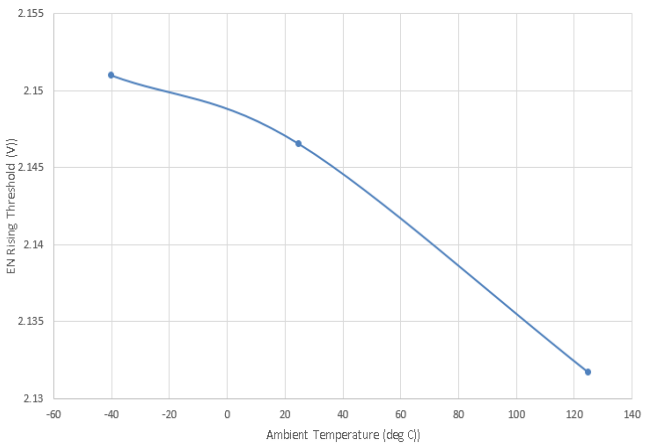

Figure 8. ENABLE Rising Threshold vs. Temperature

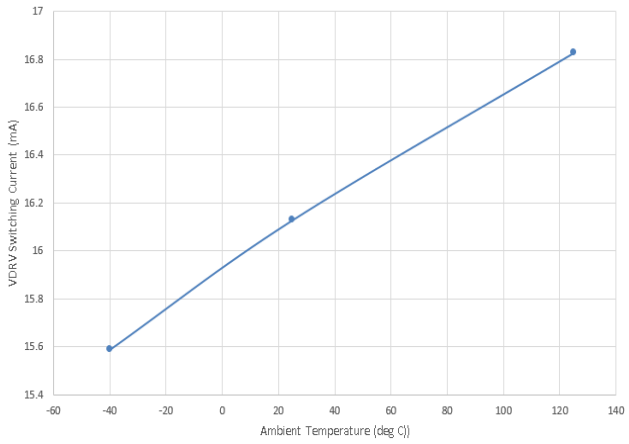

Figure 9. VDRIVE Switching Current Buck vs. Temperature

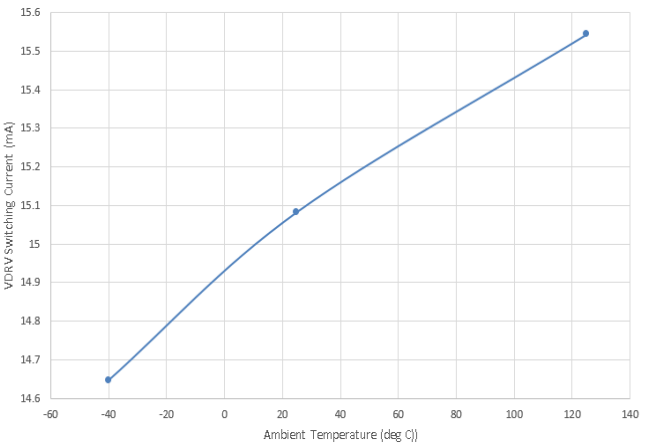

Figure 10. VDRIVE Switching Current Boost vs. Temperature

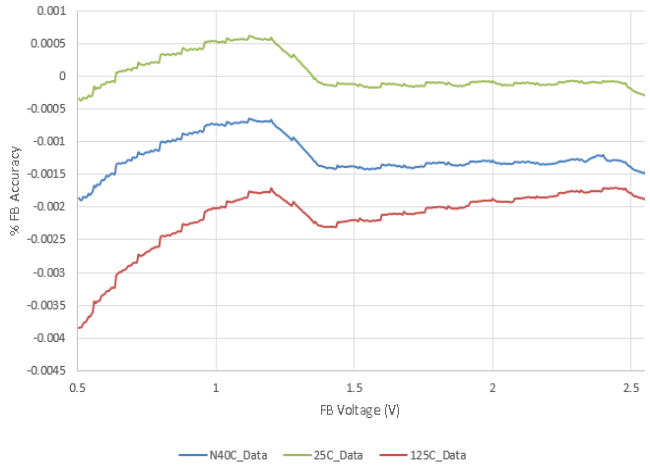

Figure 11. Voltage Accuracy vs. Temperature (FB Setting > 500 mV)

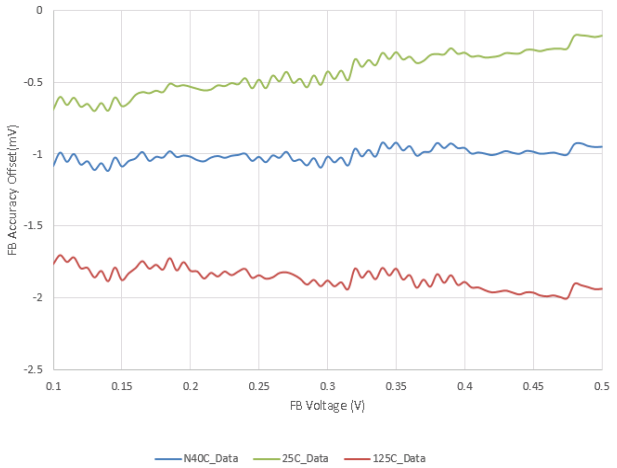

Figure 12. Voltage Accuracy vs. Temperature

Share Feedback
Your Opinion Matters

TYPICAL CHARACTERISTICS

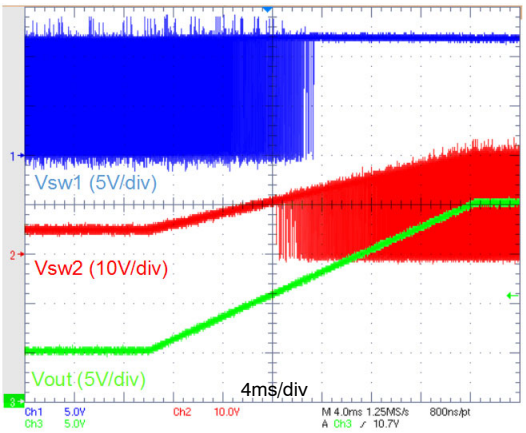

VIN=12V, VOUT=5~20V

Figure 13. Voltage Ramp Up (slew rate = 0.6 V/ms)

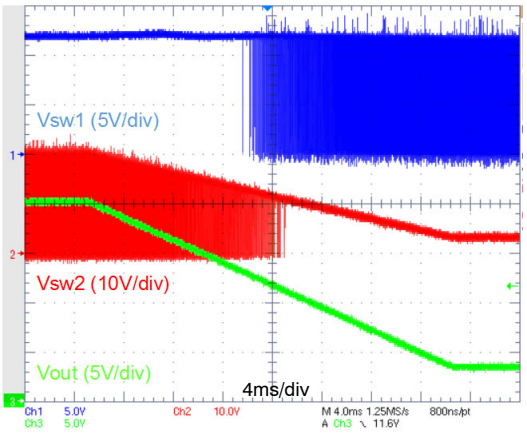

VIN=12V, VOUT=20~5V

Figure 14. Voltage Ramp Down (slew rate = 0.6 V/ms)

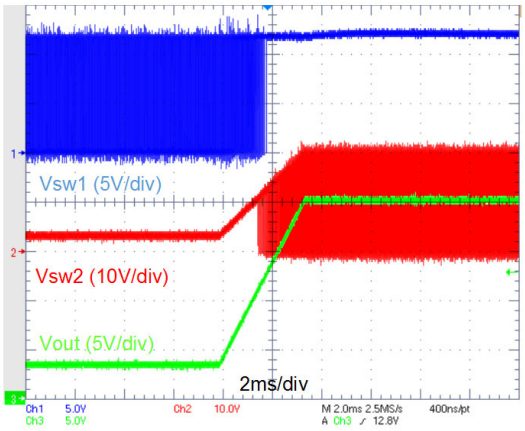

VIN=12V, VOUT=5~20V

Figure 15. Voltage Ramp Up (slew rate = 4.8 V/ms)

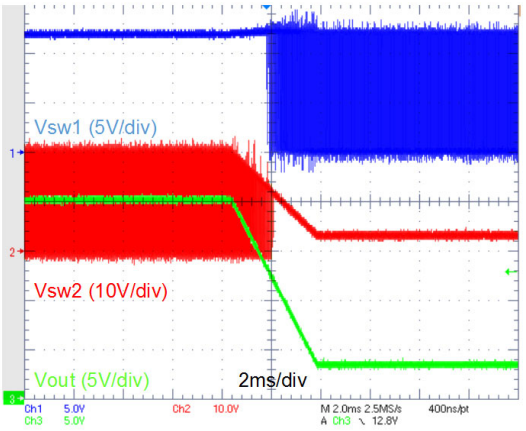

VIN=12V, VOUT=20~5V

Figure 16. Voltage Ramp Down (slew rate = 4.8 V/ms)

Share Feedback
Your Opinion Matters

TYPICAL CHARACTERISTICS

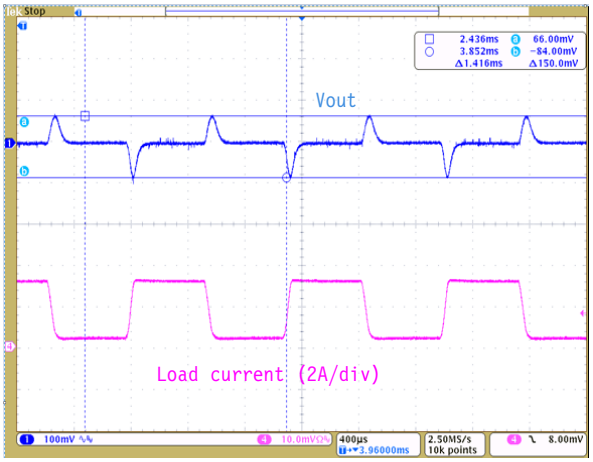

Vin=24V, Vout=5V, Load=0.3A to 3A

Figure 17. 5 V Load Step

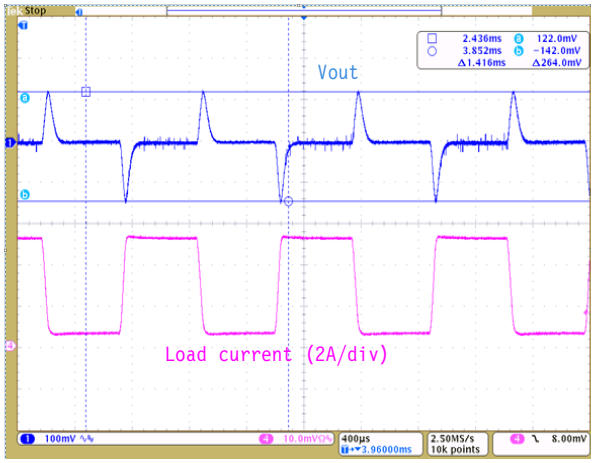

Vin=24V, Vout=5V, Load=0.5A to 5A

Figure 18. 20 V Load Step

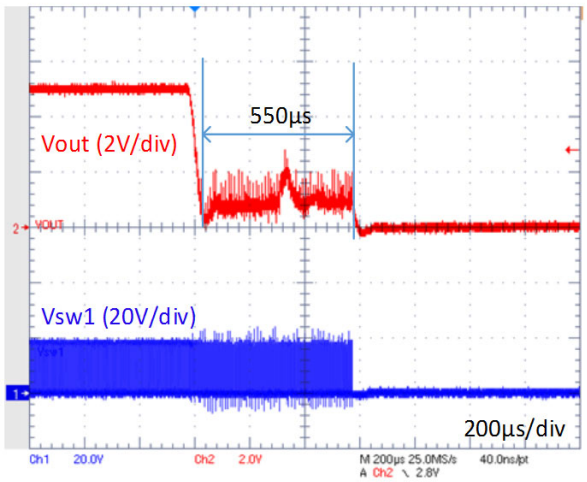

Figure 19. OCP Cycle−by−Cycle Waveform

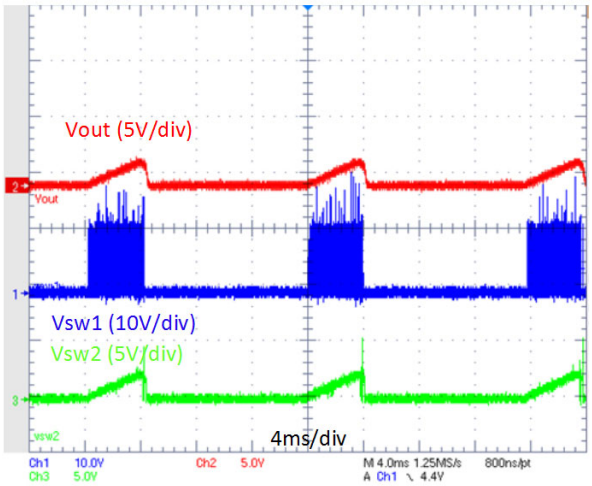

Figure 20. OCP Hiccup Waveform

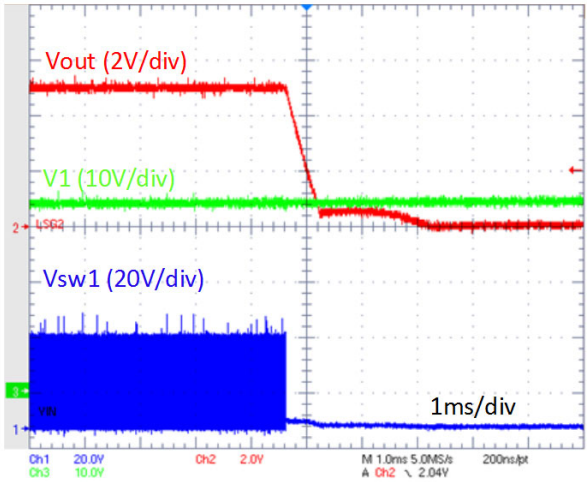

Figure 21. OVP Waveform

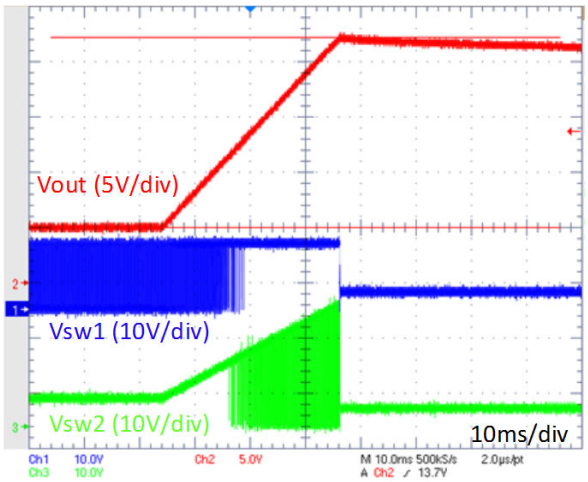

Figure 22. V2 Secondary OVP Waveform

Share Feedback
Your Opinion Matters

TYPICAL CHARACTERISTICS

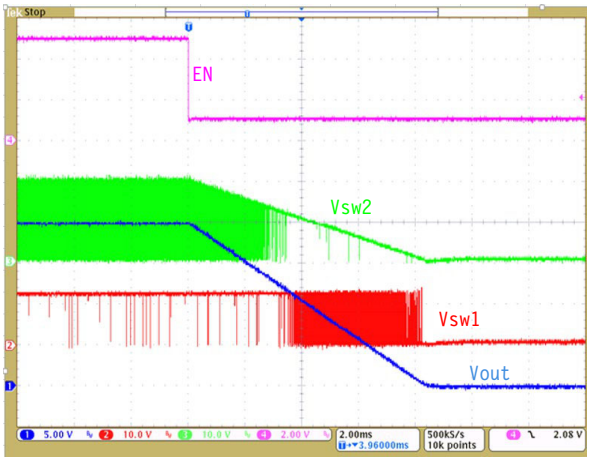

Vin=12V, Vout=20V

Figure 23. Shutdown by EN
Vout gradually walks down, after EN pin goes down from high (5V) to middle (1V)

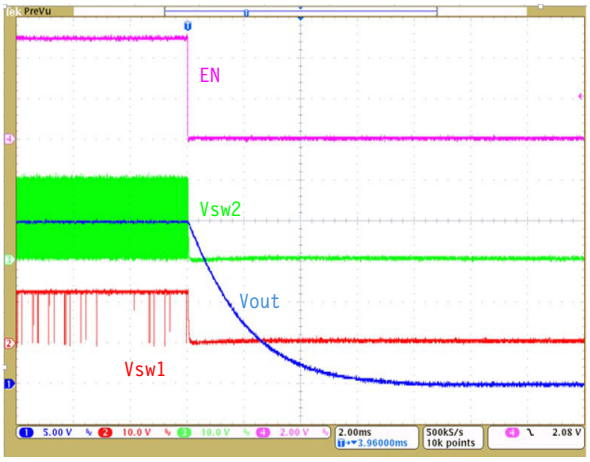

Vin=12V, Vout=20V

Figure 24. Shutdown by EN
Vout is discharged by load current, after EN pin does down from high (5V) to low (0V)

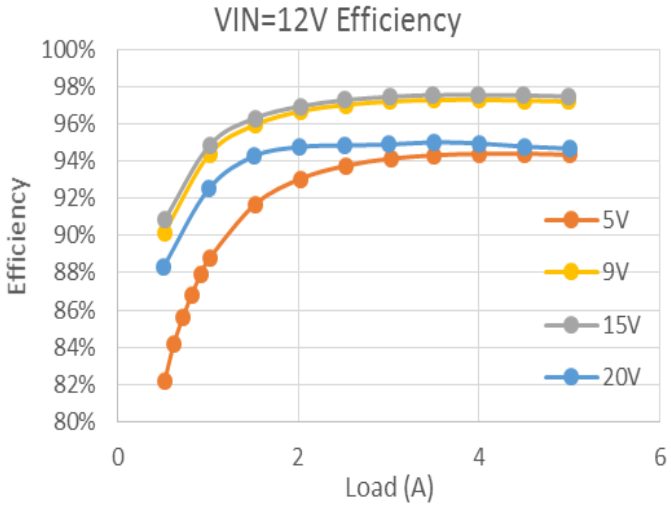

Figure 25. Efficiency vs. Load (MOSFET part number is NTMFS4C10N)

Share Feedback
Your Opinion Matters

APPLICATION INFORMATION

Dual Edge Current Mode Control

When dual edge current mode control is used, two voltage ramps are generated that are 180 degrees out of phase. The inductor current signal is added to the ramps to incorporate current mode control. In Figure 26, the COMP signal from the compensation output interacts with two triangle ramps to generate gate signals to the switches from S1 to S4. Two ramp signals cross twice at midpoint within a cycle. When COMP is above the midpoint, the system will operate at boost mode with S1 always on and S2 always off, but S3 and S4 turning on alternatively in an active switching mode. When COMP is below the midpoint, the system will operation at buck mode, with S4 always on and S3 always off, but S1 and S2 turning on alternatively in an active switching mode. The controller can switch between buck and boost mode smoothly based on the COMP signal from peak current regulation.

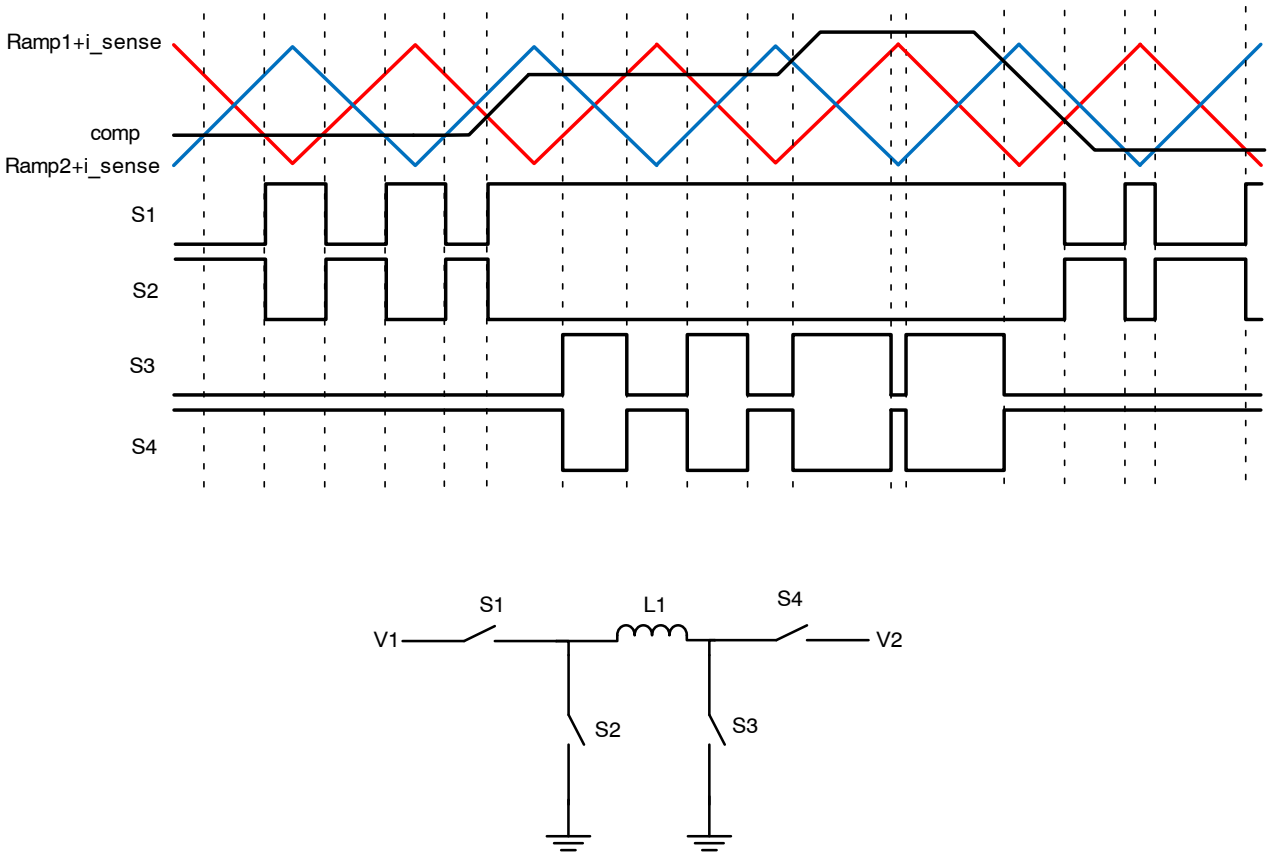

Figure 26. Transitions for Dual Edge 4 Switch Buck Boost

Share Feedback
Your Opinion Matters

Feedback and Output Voltage Profile

The feedback of the converter output voltage is connected to the FB pin of the device through a resistor divider. Internally FB is connected to the inverting input of the internal transconductance error amplifier. The non−inverting input of the gm amplifier is connected to the internal reference. The internal reference voltage is by default 0.5 V. Therefore a 10:1 resistor divider from the converter output to the FB will set the output voltage to 5 V in default. The reference voltage can be adjusted with 10 mV (default) or 5 mV steps from 0.1 V to 2.55 V through the voltage profile register (01H), which makes the continuous output voltage profile possible through an external resistor divider. For example, by default, if the external resistor divider has a 10:1 ratio, the output voltage profile will be able to vary from 1 V to 25.5 V with 100 mV steps.

Table 4. VOLTAGE PROFILE REGISTER SETTINGS

dac_target (01h)								dac_target (01h) Hex Value	dac_target lsb (03h, bit 4)	Reference DAC Voltage (mV)
bit_8	bit_7	bit_6	bit_5	bit_4	bit_3	bit_2	bit_1		bit_0	
0	0	0	0	0	0	0	0	00	1	5
…	…	…	…	…	…	…	…	…	…	…
0	0	1	0	0	0	0	1	21	0	330
0	0	1	0	0	0	0	1	21	1	335
…	…	…	…	…	…	…	…	…	…	…
0	0	1	1	0	0	1	0	32	0	500 (Default)
…	…	…	…	…	…	…	…	…	…	…
1	1	0	0	1	0	0	0	C8	0	2000
…	…	…	…	…	…	…	…	…	…	…
1	1	1	1	1	1	1	1	FF	0	2550
1	1	1	1	1	1	1	1	FF	1	2555

Transconductance Voltage Error Amplifier

To maintain loop stability under a large change in capacitance, the NCV81599 can change the gm of the internal transconductance error amplifier from 87 μS to 1000 μS allowing the DC gain of the system to be increased more than a decade triggered by the adding and removal of the bulk capacitance or in response to another user input. The default transconductance is 500 μS.

Table 5. AVAILABLE TRANSCONDUCTANCE SETTING

Address	AMP_2	AMP_1	AMP_0	Amplifier GM Value (μS)
07h, bit [2:0]	0	0	0	87
	0	0	1	100
	0	1	0	117
	0	1	1	333
	1	0	0	400
	1	0	1	500 (default)
	1	1	0	667
	1	1	1	1000

Programmable Slew Rate

The slew rate of the NCV81599 is controlled via the I^2C registers with the default slew rate set to 0.6 mV/μs (FB = 0.1 V2, assume the resistor divider ratio is 10:1) which is the slowest allowable rate change. The slew rate is used when the output voltage starts from 0 V to a user selected profile level, changing from one profile to another, or when the output voltage is dynamically changed. The output voltage is divided by a factor of the external resistor divider and connected to FB pin. The 9 Bit DAC is used to increase the reference voltage in 10 or 5 mV increments. The slew rate is decreased by using a slower clock that results in a longer time between voltage steps, and conversely increases by using a faster clock. The step monotonicity depends on the bandwidth of the converter where a low

Share Feedback
Your Opinion Matters

bandwidth will result in a slower slew rate than the selected value. The available slew rates are shown in Table 6. The selected slew rate is maintained unless the current limit is tripped; in which case the increased voltage will be governed by the positive current limit until the output voltage falls or the fault is cleared.

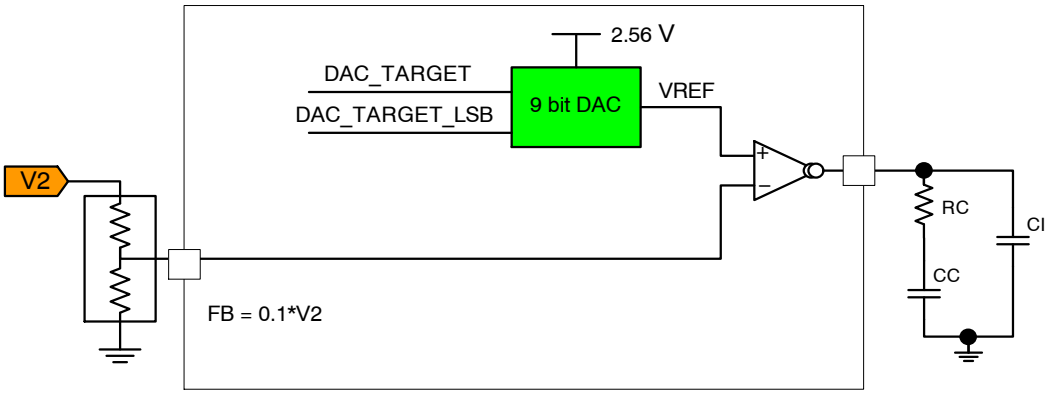

Figure 27. Slew Rate Limiting Block Diagram and Waveforms

Table 6. SLEW RATE SELECTION

Address	Slew Bits	Soft Start or Voltage Transition (FB = 0.1*V2)
02h, bit [1:0]	Slew_0	0.6 mV/μs
	Slew_1	1.2 mV/μs
	Slew_2	2.4 mV/μs
	Slew_3	4.8 mV/μs

The discharge slew rate is accomplished in much the same way as the charging except the reference voltage is decreased rather than increased. The slew rate is maintained unless the negative current limit is reached. If the negative current limit is reached, the output voltage is decreased at the maximum rate allowed by the current limit (see the negative current limit section).

Soft−Start and EN Pin

During a 0 V soft−start, standard converters can start in synchronous mode and have a monotonic rising of output voltage. If a prebias exists on the output and the converter starts in synchronous mode, the prebias voltage could be discharged. The NCV81599 controller ensures that if a prebias is detected, the soft−start is completed in a non−synchronous mode to prevent the output from discharging. During soft−start, the output rising slew rate will follow the slew rate register with default value set to 0.6 mV/μs (FB = 0.1*V2).

The EN Pin has 2 levels of threshold: the internal LDO and I^2C function are powered up when EN pin reaches ~0.8 V; while the buck−boost conversion starts when EN pin reaches ~2.0 V. The EN pin can NOT work with very slow dv/dt signals. Please always keep the EN pin input signal faster than 0.5 V/ms. The EN pin has a pull−up current of ~3 μA, so that an open EN pin powers up the NCV81599. To keep the EN pin signal faster enough, please keep total capacitance on the EN pin below 4.7 nF.

When the EN pin goes from high (above ENHT) down to middle (below ENLT, but still above ENLDOHT), the NCV81599 walks down the Vout gradually to zero, in the discharge slew rate selected by “voltage transition slew rate” register value, as shown in waveforms in Figure 23. All the I^2C register value stays.

When the EN pin goes from high (above ENHT) to low (below ENLDOLT), the NCV81599 resets registers to default values and turns off the internal LDO.

For cases where VOUT > 5 V when EN is to be lowered, it is recommended to first write VOUT to 5.0 V before lowering EN or only lower EN to the mid range. Once VOUT slews back to 5 V, then EN can be lowered to 0 V.

Frequency Programming

The switching frequency of the NCV81599 can be programmed from 150 kHz to 1.2 MHz via the I^2C interface. The default switching frequency is set to 600 kHz. The switching frequency can be changed on the fly. However, it is a good practice to disable the part and then program to a different frequency to avoid transition glitches at large load current.

The NVP81599 employs a minimum switching frequency circuit (F_{MIN}) to ensure the bootstrap caps remain charged and operation in the audible hearing range band is avoided. Typically, this circuit is only active when V_{IN} is near V_{OUT} at light loads.

Share Feedback
Your Opinion Matters

Table 7. FREQUENCY PROGRAMMING TABLE

Name	Bit	Definition	Description
Freq1	03H [2:0]	Frequency Setting	3 Bits that Control the Switching Frequency from 150 kHz to 1.2 MHz. 000: 600 kHz (default) 001: 150 kHz 010: 300 kHz 011: 450 kHz 100: 750 kHz 101: 900 kHz 110: 1.2 MHz 111: Reserved

Current Sense Amplifiers

Internal precision differential amplifiers measure the potential between the terminal CSP1 and CSN1 or CSP2 and CSN2. Current flows from the input V1 to the output in a buck boost design. Current flowing from V1 through the switches to the inductor passes through R_{SENSE}. The external sense resistor, R_{SENSE}, has a significant effect on the function of current sensing and limiting systems and must be chosen with care. First, the power dissipation in the resistor should be considered. The system load current will cause both heat and voltage loss in R_{SENSE}. The power loss and voltage drop drive the designer to make the sense resistor as small as possible while still providing the input dynamic range required by the measurement. Note that input dynamic range is the difference between the maximum input signal and the minimum accurately measured signal, and is limited primarily by input DC offset of the internal amplifier. In addition, R_{SENSE} must be small enough that V_{SENSE} does not exceed the maximum input voltage 100 mV, even under peak load conditions.

The potential difference between CSPx and CSNx is level shifted from the high voltage domain to the low voltage VCC domain where the signal is split into two paths.

The first path, or external path, allows the end user to observe the analog or digital output of the high side current sense. The external path gain is set by the end user allowing the designer to control the observable voltage level. The voltage at CS1 or CS2 can be converted to 7 bits by the ADC and stored in the internal registers which are accessed through the I^2C interface.

The second path, or internal path, has internally set gain of 10 and allows cycle by cycle precise limiting of positive and negative peak input current limits.

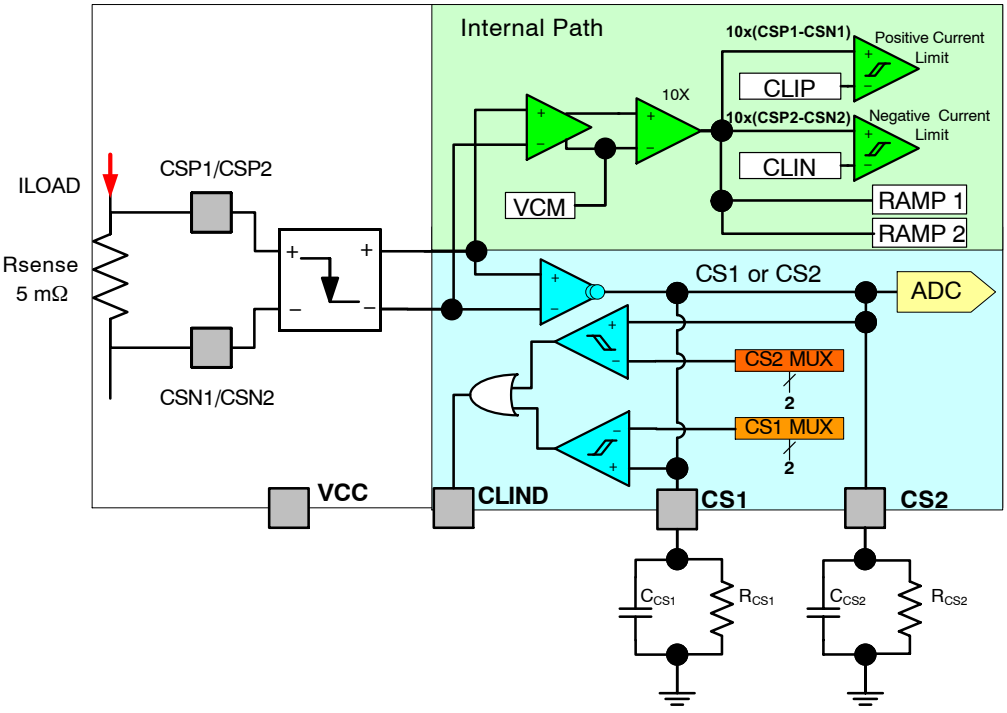

Figure 28. Block Diagram and Typical Connection for Current Sense

Share Feedback
Your Opinion Matters

Positive Current Limit Internal Path

The NCV81599 has a pulse by pulse current limiting function activated when a positive current limit triggers. CSP1/CSN1 will be the positive current limit sense channel.

When a positive current limit is triggered, the current pulse is truncated. In both buck mode and in boost mode the S1 switch is turned off to limit the energy during an over current event. The current limit is reset every switching cycle and waits for the next positive current limit trigger. In this way, current is limited on a pulse by pulse basis. Pulse by pulse current limiting is advantageous for limiting energy into a load in over current situations but are not up to the task of limiting energy into a low impedance short. To address the low impedance short, the NCV81599 does pulse by pulse current limiting for 500 μs known as Ilim timeout, the controller will enter into hiccup mode. The NCV81599 remains in fast stop state with all switches driven off for 10 ms. Once the 10 ms has expired, the part is allowed to soft start to the previously programmed voltage and current level if the short circuit condition is cleared.

The internal current limits can be controlled via the I^2C interface as shown in Table 8.

Table 8. INTERNAL PEAK CURRENT LIMIT

CLIN_1	CLIN_0	Address	CSP2−CSN2 (mV)	Current at RSENSE = 5 mΩ (A)
0	0	05h, bit[5:4]	−40 (Default)	−8
0	1		−25	−5
1	0		−15	−3
1	1		0	0
CLIP_1	**CLIP_0**	**Address**	**CSP1−CSN1 (mV)**	**Current at RSENSE = 5 mΩ (A)**
0	0	05h, bit[1:0]	38 (Default)	7.6
0	1		23	4.6
1	0		11	2.2
1	1		70	14

Positive Current Limit Internal Latch−off

In addition to the positive current limit, there is a latch−off over current protection, to provide quick protection against output short and inductor saturation. The latch−off over current protection, OCP_L, sensed across CSP2−CSN2 pins, has its threshold around twice that of the positive current limit. As listed in the following table, OCP_L threshold is set by the same I^2C register bits, CLIP_1 and CLIP_0, which set the internal positive peak current limit at the same time.

Table 9. THE LATCH−OFF CURRENT LIMIT OCP_L

CLIP_1	CLIP_0	Address	CSP2−CSN2 (mV)	Current at RSENSE = 5 mΩ (A)
0	0	05h, bit[1:0]	70 (Default)	14
0	1		38	7.6
1	0		23	4.6
1	1		106	21.2

Once the latch−off current limit protection is triggered, an input OCP_L fault is set. All four switches are driven off immediately. The OCP_L interrupt register bit set to 1. Only toggling the EN or input power recycle can reset the part. The latch−off current limit OCP_L can be disabled via I^2C register as shown in the following table.

Table 10. OCP_L LATCH−OFF CURRENT LIMIT ENABLING AND DISABLING

Address	Dis_OCP_L	Description
04h, bit[1]	0	OCP_L Action Enabled
04h, bit[1]	1	OCP_L Action Disabled

Negative Current Limit Internal Path

Negative current limit can be activated in a few instances, including light load synchronous operation, heavy load to light load transition, output overvoltage, and high output voltage to lower output voltage transitions. CSP2/CSN2 will be the negative current limit sense channel.

During light load synchronous operation, or heavy load to light load transitions the negative current limit can be triggered during normal operation. When the sensed current exceeds the negative current limit, the S4 switch is shut off preventing the discharge of the output voltage both in buck mode and in boost mode if the output is in the power good range. Both in boost mode and in buck mode when a negative current is sensed, the S4 switch is turned off for the remainder of either the S4 or S2 switching cycle and is turned on again at the appropriate time. In buck mode, S4 is turned off at the negative current limit transition and turned on again as soon as the S2 on switch cycle ends. In boost mode, the S4 switch is the rectifying switch and upon

Share Feedback
Your Opinion Matters

negative current limit the switch will shut off for the remainder of its switching cycle. The internal negative current limits can be controlled via the I^2C interface as shown in Table 8.

External Path (CS1, CS2, CLIND)

The voltage drop across the sense resistors as a result of the load can be observed on the CS1 and CS2 pins. Both CS1, CS2 can be monitored with a high impedance input. The voltage drop is converted into a current by a transconductance amplifier with a typical GM of 5 mS. The final gain of the output is determined by the end users selection of the R_{CS} resistors. The output voltage of the CS pin can be calculated from Equation 1. The user must be careful to keep the dynamic range below 2.56 V when considering the maximum short circuit current.

$$V_{CS} = (I_{AVERAGE} * R_{SENSE} * Trans) * R_{CS} < 2.56\ V \Rightarrow$$

$$R_{CS} = \frac{V_{CS}}{I_{AVERAGE} * R_{SENSE} * Trans} < \frac{2.56\ V}{I_{MAX} * R_{SENSE} * Trans} \quad \text{(eq. 1)}$$

The speed and accuracy of the dual amplifier stage allows the reconstruction of the input and output current signal, creating the ability to limit the peak current. If the user would like to limit the mean DC current of the switch, a capacitor can be placed in parallel with the R_{CS} resistors. CS1, CS2 can be monitored with a high impedance input.

CS1, CS2 voltages are connected internally to 2 high speed low offset comparators. When the external CLIND flag is triggered, i.e, CLIND pin voltage is pulled high, it indicates that one of the internal comparators has exceeded the preset limit (CSx_LIM). The default comparator setting is 250 mV which is a limit of 500 mA with a current sense resistor of 5 mΩ and an R_{CS} resistor of 20 kΩ. The external current limit settings are shown in Table 11.

Table 11. REGISTER SETTING FOR THE CLIM COMPARATORS

Address	CLIMx_1	CLIMx_0	CSx_LIM (V)	Current at RSENSE = 5 mΩ RSET = 20 kΩ (A)	Current at RSENSE = 5 mΩ RSET = 10 kΩ (A)
06h, bit [3:0]	0	0	0.25	.5	1
	0	1	0.75	1.5	3
	1	0	1.5	3	6
	1	1	2.5	5	10

Overvoltage Protection (OVP)

When the divided output voltage is 15% (typical) above the internal reference voltage for greater than one switching cycle, an OV fault is set. During an overvoltage fault, S1 is driven off, S2 is driven on, and S3 and S4 are modulated to discharge the output while preventing the inductor current from going beyond the I^2C programmed negative current limit.

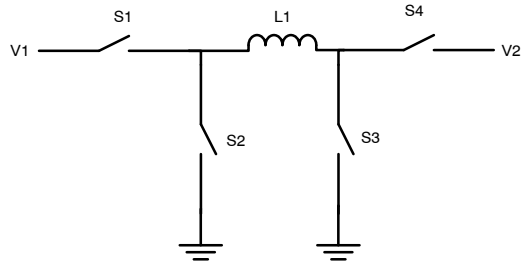

Figure 29. Diagram for OV Protection

During overvoltage fault detection the switching frequency changes from its I^2C set value to 50 kHz to reduce the power dissipation in the switches and prevent the inductor from saturating. OVP is disabled during voltage changes to ensure voltage changes and glitches during slewing are not falsely reported as faults. The OVP faults are reengaged 2 ms after completion of the soft start.

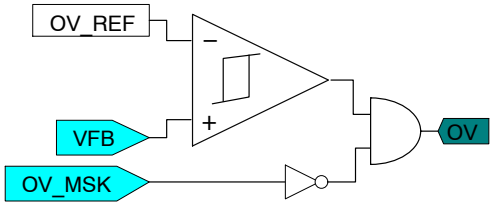

Figure 30. OV Block Diagram

Input Overvoltage Lockout (OVLO) Protection

The goal of the input OVLO fault detection is to protect our IC from overvoltage damage and obtain regulation again once the OVLO fault is cleared. OVLO can be a latched shutdown or hiccup mode by a user register.

In a latched shutdown mode, when the input voltage is higher than V_{OVLOIN_R} for greater than the debounce time, an input OVLO fault is set. All switches are driven off immediately. The PG and input OVLO interrupt registers are set to 1. Only toggling the EN or input power recycle can reset the part.

In a hiccup mode, when the input voltage is higher than V_{OVLOIN_R} for greater than the debounce time, an input OVLO fault is set. The OVLO debounce time is to filter any overvoltage spike that is shorter than the time. During an input OV fault, all switches are driven off immediately. The

Share Feedback
Your Opinion Matters

DAC voltage is reset to 0. The PG and input OVLO interrupt registers are set to 1. Once the input voltage falls under the threshold, the debounce time starts counting. If input OVLO keeps not detected during the OVLO recover debounce time, a soft start will be reengaged.

Input OVLO detection starts from the beginning of soft−start and ends in shutdown.

Output OVLO Protection and V2 Pin

The goal of the output OVLO fault detection is to protect the MOSFET from overvoltage damage. The overvoltage can be created by accidently write a wrong number in the DAC_target register or installation problem on the external feedback voltage divider. The default output OVLO threshold is 30V. Customer can write to the 2−bit output OVLO register 06h bit[5:4], sel_ov2th to configure the threshold.

The output OVLO threshold can be set as 15V, 22.5V, 30V and 36V, therefore it can be used for customer user cases that requires a max output voltage of 10V, 15V, 20V and 25.5V, respectively. Since most of the time, OVP should be able to protect the output over voltage, the output OVLO threshold are set >40% higher than the max output in that range. When the output has run away due to either external voltage divider or DAC configure error, output OVLO will kick into action.

Output OVLO has a latched shutdown mode. When the output voltage is higher than the output OVLO threshold for greater than the debounce time, an OVLO fault is set. The output OVLO interrupt register will be set to 1. All switches are driven off immediately. The PG and output OVLO interrupt registers are set to 1. Toggling the EN or input power recycle can reset the part.

Output OVLO detection starts from the beginning of soft−start and ends in shutdown.

The output OVLO is sensed on the V2 pin. In some extreme conditions, the V2 pin voltage, i.e. the output voltage, may be pulled to negative, such as when the output is short by a long cable. When V2 pin voltage goes negative, the NCV81599 may enter a VCC UVLO, which resets all registers to default and initial a soft−start. To prevent negative voltage on V2 pin, a resistor, such as 1 kΩ, can be placed between V2 pin and output voltage.

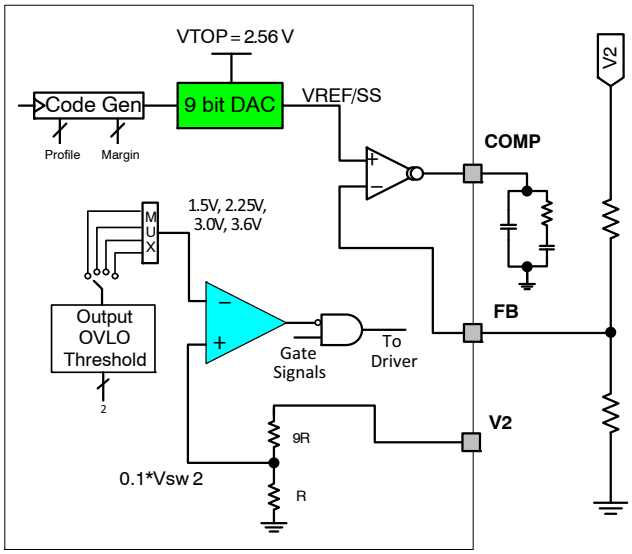

Figure 31. Output OVLO

Power Good Monitor (PG)

NCV81599 provides two window comparators to monitor the internal feedback voltage. The target voltage window is ±5% of the reference voltage (typical). Once the feedback voltage is within the power good window, a power good indication is asserted once a 3.3 ms timer has expired. If the feedback voltage falls outside a ±7.5% window for greater than 1 switching cycle, the power good register is reset. Power good is indicated on the INT pin if the I^2C register is set to display the PG state. When DAC is set to below 400 mV, the PG high threshold is kept at a constant voltage, and the PG low threshold is kept at 0 to avoid false triggering.

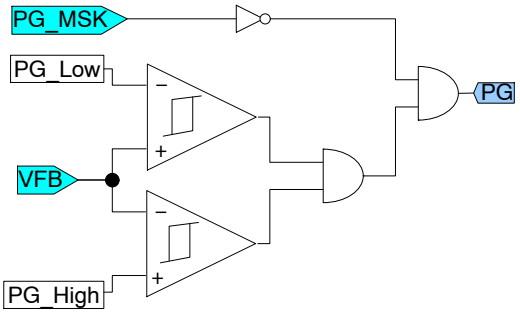

Figure 32. PG Block Diagram

Share Feedback
Your Opinion Matters

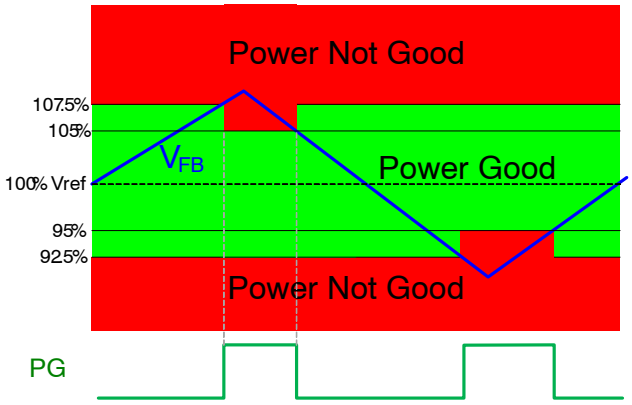

Figure 33. Power Good Diagram

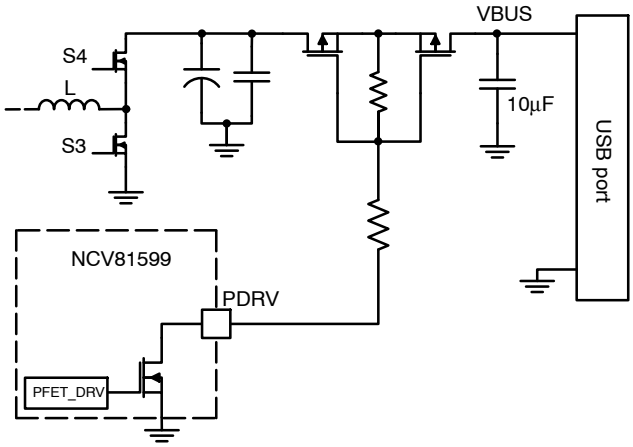

Figure 34. PFET Drive

Thermal Shutdown

The NCV81599 protects itself from overheating with an internal thermal shutdown circuit. If the junction temperature exceeds the thermal shutdown threshold (typically 150°C), all MOSFETs will be driven to the off state, and the part will wait until the temperature decreases to an acceptable level. The fault will be reported to the fault register and the INT flag will be set unless it is masked. When the junction temperature drops below 125°C (typical), the part will discharge the output voltage to Vsafe 0 V.

PFET Drive

The PMOS drive is an open drain output used to control the turn on and turn off of PMOSFET switches at a floating potential. The external PMOS can be used as a cutoff switch, enable for an auxiliary power supply, or a bypass switch for a power supply. The RDSon of the pulldown NMOSFET is typically 20 Ω allowing the user to quickly turn on large PMOSFET power channels.

Table 12. PFET ACTIVATION TABLE

Address	PFET_DRV	Description
04h, bit [0]	0	NFET OFF (Default)
	1	NFET ON

Analog to Digital Converter

The analog to digital converter is a 7−bit A/D which can be used as an event recorder, an input voltage sampler, output voltage sampler, input current sampler, or output current sampler. The converter digitizes real time data during the sample period. The internal precision reference is used to provide the full range voltage; in the case of V1(input voltage), or FB (with 10:1 external resistor divider) the full range is 0 V to 25.5 V. The V1 is internally divided down by 10 before it is digitized by the ADC, thus the range of the measurement is 0 V−2.55 V, same as FB. The resolution of the V1 and FB voltage is 20 mV at the analog mux, but since the voltage is divided by 10 output voltage resolution will be 200 mV. Therefore, the highest input voltage report is 200 mV x 127 = 25.4 V. When CS1 and CS2 are sampled, the range is 0 V−2.55 V. The resolution will be 20 mV in the CS monitoring case. The actual current can be calculated by dividing the CS1 or CS2 values with the factor of Rsense × 5 mS × RCSx, the total gain from the current input to the external current monitoring outputs.

Share Feedback
Your Opinion Matters

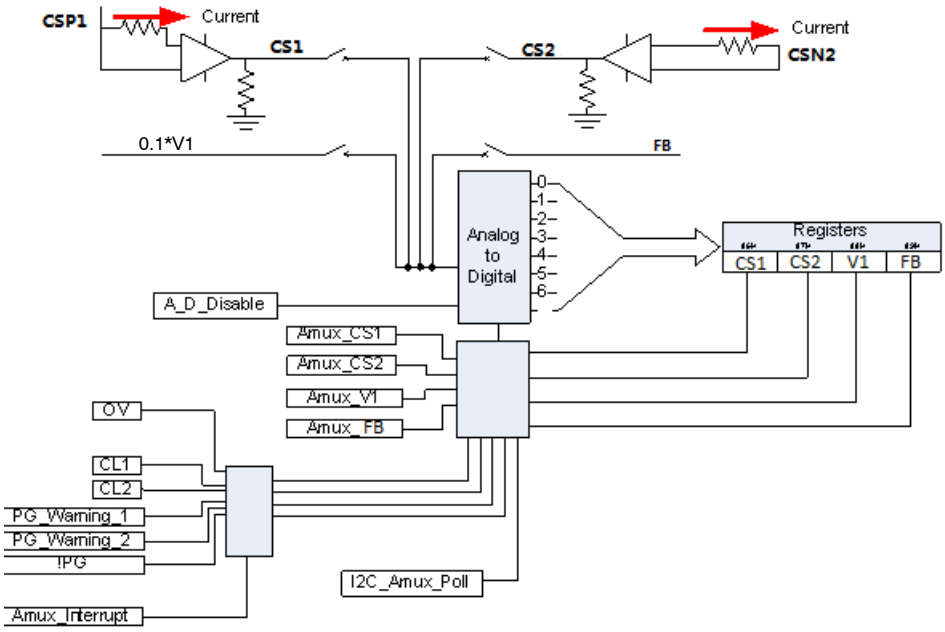

Figure 35. Analog to Digital Converter

Table 13. ADC RESULT BYTE

Address	MSB	5	4	3	2	1	LSB
10h, 11h, 12h, 13h	D6	D5	D4	D3	D2	D1	D0

Table 14. REGISTER SETTING FOR ENABLING DESIRED ADC BEHAVIOUR

Address	ADC_2	ADC_1	ADC_0	Description
08h, bit [4:2]	0	0	0	Set Amux to VFB
	0	0	1	Sets Amux to V1
	0	1	0	Set Amux to CS2
	0	1	1	Set Amux to CS1
	1	0	0	Select all in rotating sequence (VFB, V1, CS2, CS1, VFB, …)

Table 15. REGISTER SETTING FOR ADC TRIGGER MANNER

Address	ADC Trigger	Description
08h, bit [1:0]	00	Trigger a 1x read by a fault condition (Default)
	01	Trigger a 1x read
	10	Trigger a continuous read

Interrupt Control

The interrupt controller continuously monitors internal interrupt sources, generating an interrupt signal when a system status change is detected. Individual bits generating interrupts will be set to 1 in the INTACK register (I^2C read only registers), indicating the interrupt source. INTACK register is automatically reset by an I^2C read. All interrupt sources can be masked by writing 1 in register INTMSK of 09h and 0Ah. Masked sources will never generate an interrupt request on the INT pin. The INT pin is an open drain output. A non−masked interrupt request will result in the INT pin being driven high. When the host reads the INTACK registers, the INT pin will be driven low and the interrupt register INTACK is cleared. Figure 36 illustrates the interrupt process.

Share Feedback
Your Opinion Matters

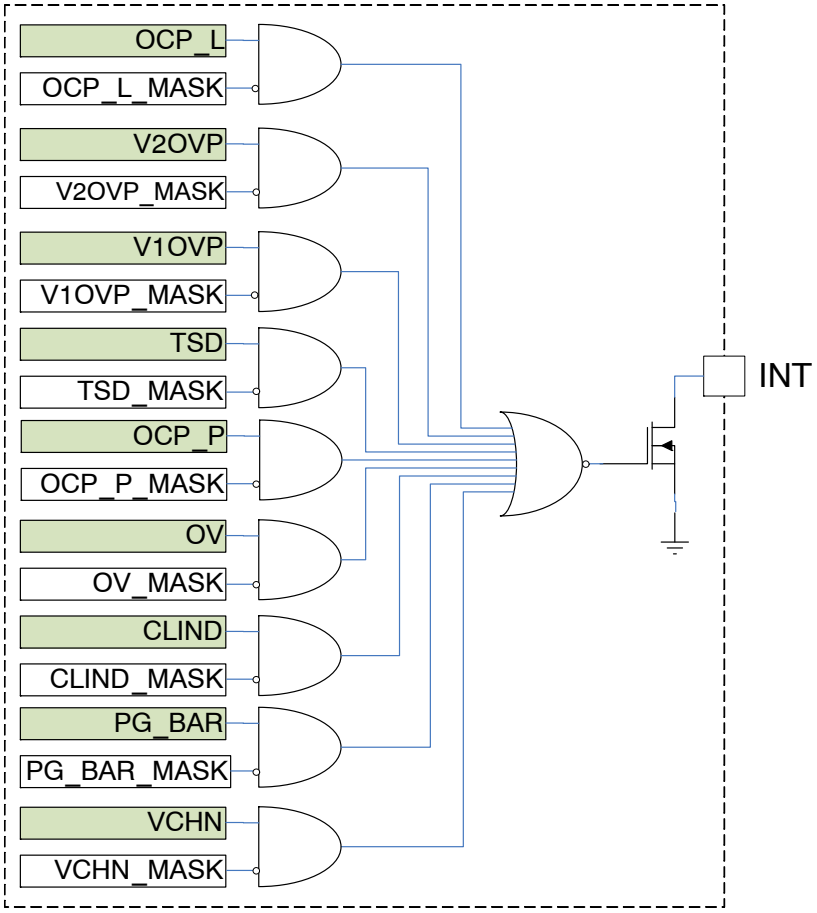

Figure 36. Interrupt Logic

Table 16. INTERPRETATION TABLE

Interrupt Name	Register name	Address	Description
OCP_L	ocp_l	14h, bit [6]	Internal positive over current latch−off
V2OVP	v2ovp	14h, bit [5]	Output secondary over voltage
V1OVP	v1ovp	14h, bit [4]	Input over voltage
TSD	tsd	14h, bit [3]	Thermal shut down
OCP_P	ocp_p	14h, bit [2]	Internal positive over current
OV	ov	14h, bit [1]	Output over voltage
CLIND	ext_clind_ocp	14h, bit [0]	External over current trip from CLIND
VCHN	vchn	15h, bit [1]	Output negative voltage change
PG_BAR	pg_int	15h, bit [0]	Power good bar thresholds exceeded

I²C Address and Registers

NCV81599 can set up to 4 different I²C addresses by sensing the shunt resistor voltage at ADDR pin. The chip will source a 10 μA current to the ADDR resistor and sense the voltage corresponding to different I²C addresses everytime when it is powered on. Suggest to put resistors of 0 Ω, 26.1 kΩ, 44.2 kΩ, 71.5 kΩ from ADDR pin to GND to set I2C address 74H, 75H, 76H, 77H respectively.

Unused bits in the register map below are marked with "−". Writing either "1" or "0" into these unused bits in user−programmable registers does NOT change any function/performance of the NCV81599.

Share Feedback
Your Opinion Matters

Table 17. I2C REGISTER MAP BIT DETAIL

	ADDR (Hex)	Bit 7	Bit 6	Bit 5	Bit 4	Bit 3	Bit 2	Bit 1	Bit 0	Default
User−programmable Registers	00h	–	–	0	0	en_int	en_mask	–	–	00h
	01h	dac_target								32h
	02h	–	–	–	–	–	–	slew_rate		00h
	03h	–	–	v1ovp_lat	dac_target_isb	–	pwm_frequency			00h
	04h	–	–	cs2_dchrg	cs1_dchrg	–	–	dis_ocp_l	pfet	00h
	05h	–	–	ocp_clim_neg		–	–	ocp_clim_pos		00h
	06h	–	–	sel_ov2th		cs2_clim_pos		cs1_clim_pos		20h
	07h	–	–	–	–	–	gm_amp_setting			05h
	08h	–	–	dis_adc	amux_sel			amux_trigger		00h
	09h	–	int_mask _ocp_l	int_mask_v2ovp	int_mask_v1ovp	int_mask_tsd	int_mask_ocp_p	int_mask_ov	int_mask_clind	00h
	0Ah	–	–	–	–	–	–	int_mask_vchn	int_mask_pg	00h
–	0B .. 0Fh									
User Read−only Registers	10h	–	vfb							
	11h	–	vin							
	12h	–	cs2							
	13h	–	cs1							
	14h	–	ocp_l	v2ovp	v1ovp	tsd	ocp_p	ov	ext_clind_ocp	
	15h	–	–	–	–	–	–	vchn	pg_int	

Share Feedback
Your Opinion Matters

I²C Interface

The I²C interface can support 5 V TTL, LVTTL, 2.5 V and 1.8 V interfaces with two precision SCL and SDA comparators with 1 V thresholds shown in Figure 37. The part cannot support 5 V CMOS levels as there can be some ambiguity in voltage levels.

I²C Compatible Interface

The NCV81599 can support a subset of I²C protocol as detailed below. The NCV81599 communicates with the external processor by means of a serial link using a 400 kHz up to 1.2 MHz I²C two−wire interface protocol. The I²C interface provided is fully compatible with the Standard, Fast, and High−Speed I²C modes. The NCV81599 is not intended to operate as a master controller; it is under the control of the main controller (master device), which controls the clock (pin SCL) and the read or write operations through SDA. The I²C bus is an addressable interface (7−bit addressing only) featuring two Read/Write addresses.

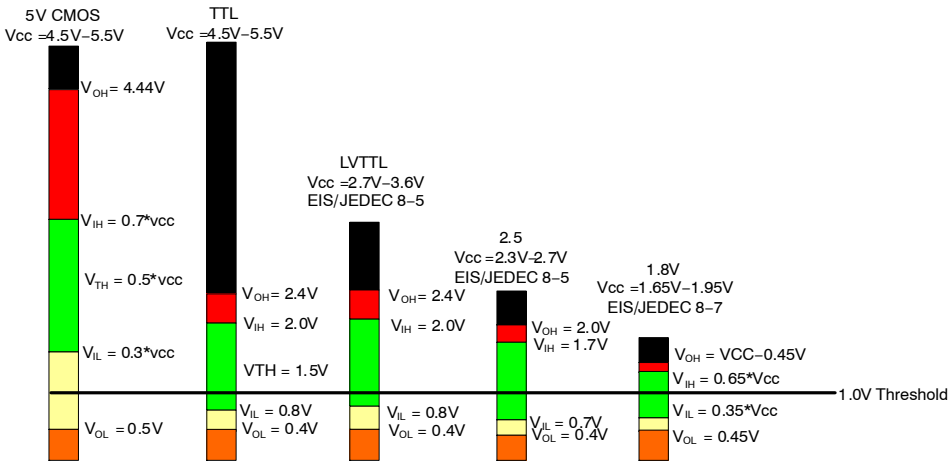

Figure 37. I²C Thresholds and Comparator Thresholds

I2C Communication Description

The first byte transmitted is the chip address (with the LSB bit set to 1 for a Read operation, or set to 0 for a Write operation). Following the 1 or 0, the data will be:

- In case of a Write operation, the register address (@REG) pointing to the register for which it will be written is followed by the data that will written in that location. The writing process is auto−incremental, so the first data will be written in @REG, the contents of @REG are incremented, and the next data byte is placed in the location pointed to @REG + 1..., etc.
- In case of a Read operation, the NCV81599 will output the data from the last register that has been accessed by the last write operation. Like the writing process, the reading process is auto−incremental.

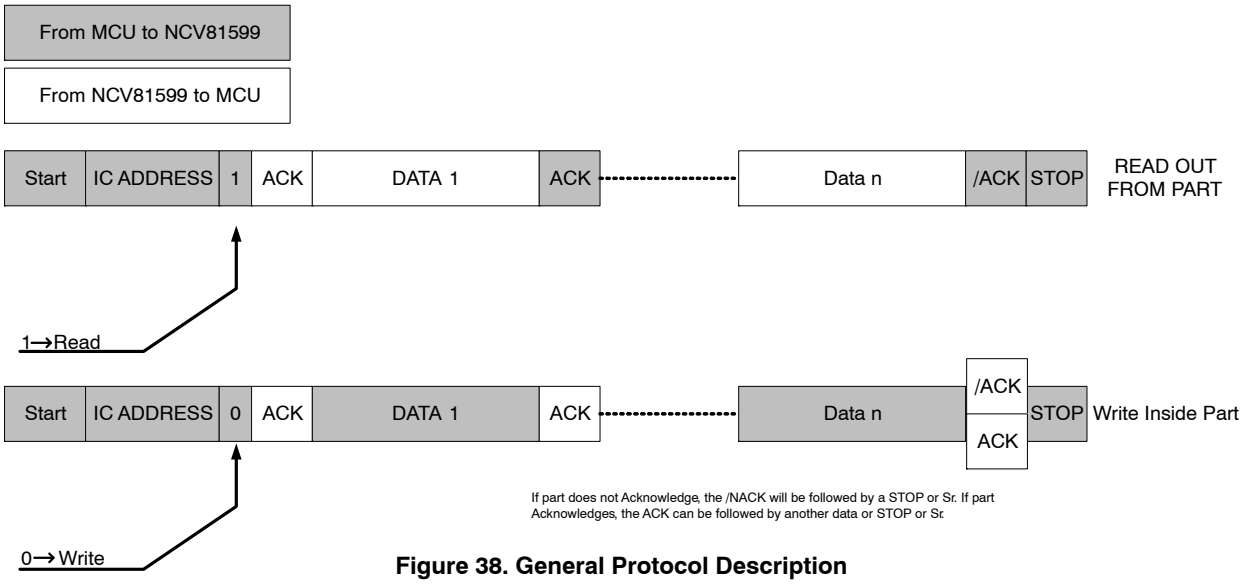

Figure 38. General Protocol Description

Share Feedback
Your Opinion Matters

Read Out from Part

The master will first make a “Pseudo Write” transaction with no data to set the internal address register. Then, a stop then start or a repeated start will initiate the Read transaction from the register address the initial Write transaction was pointed to:

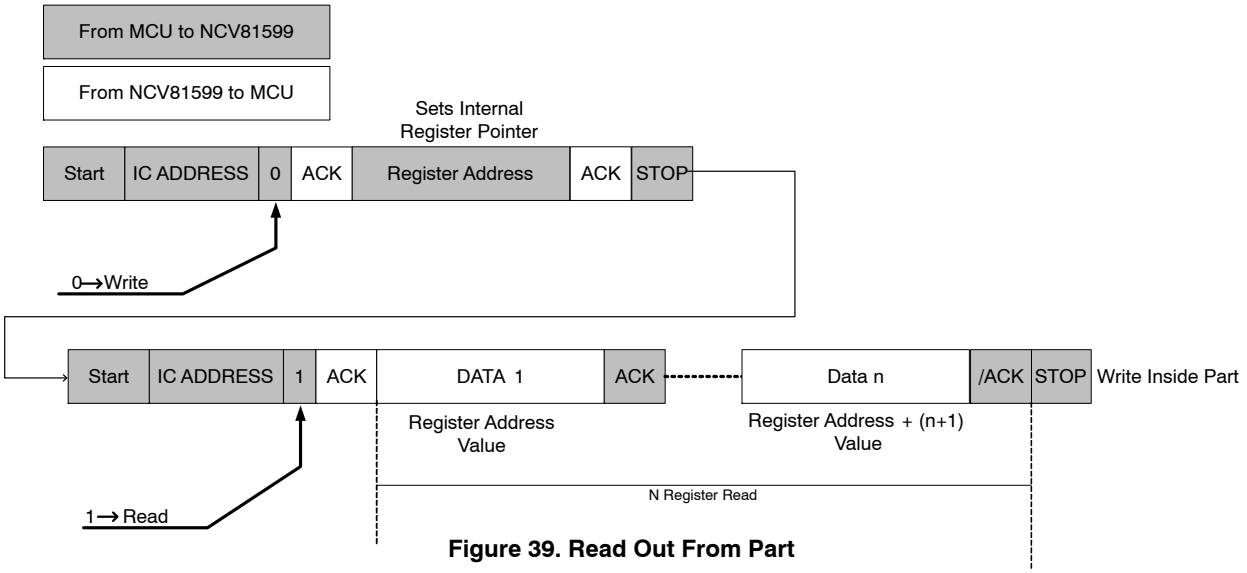

Figure 39. Read Out From Part

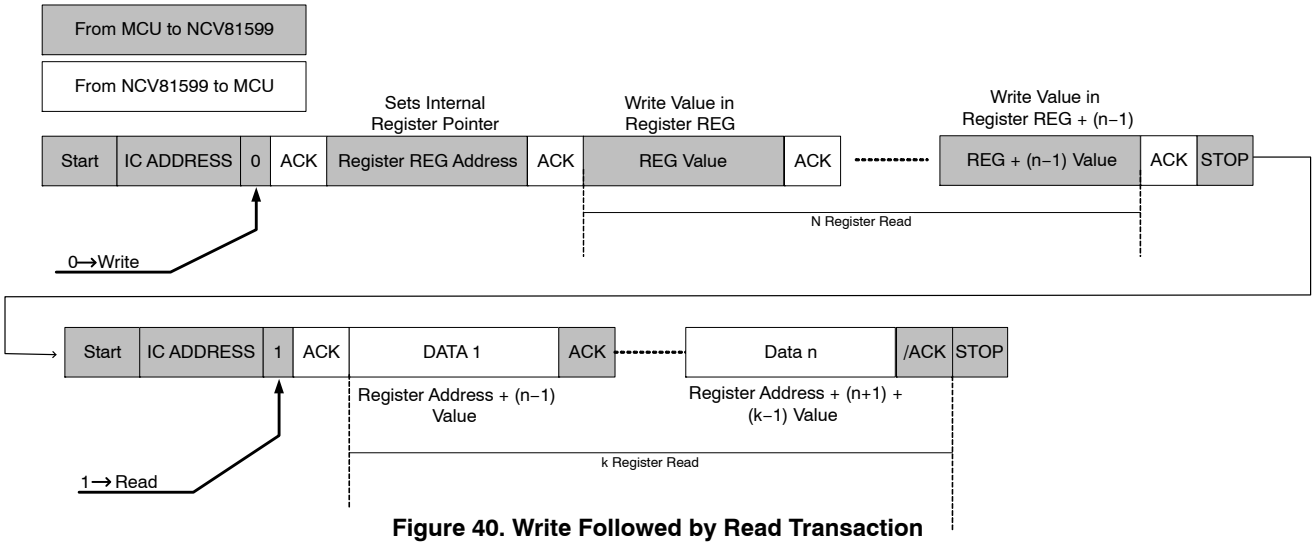

Figure 40. Write Followed by Read Transaction

Write In Part

Write operation will be achieved by only one transaction. After the chip address, the MCU first data will be the internal register desired to access, the following data will be the data written in REG, REG + 1, REG + 2, ..., REG + (n−1).

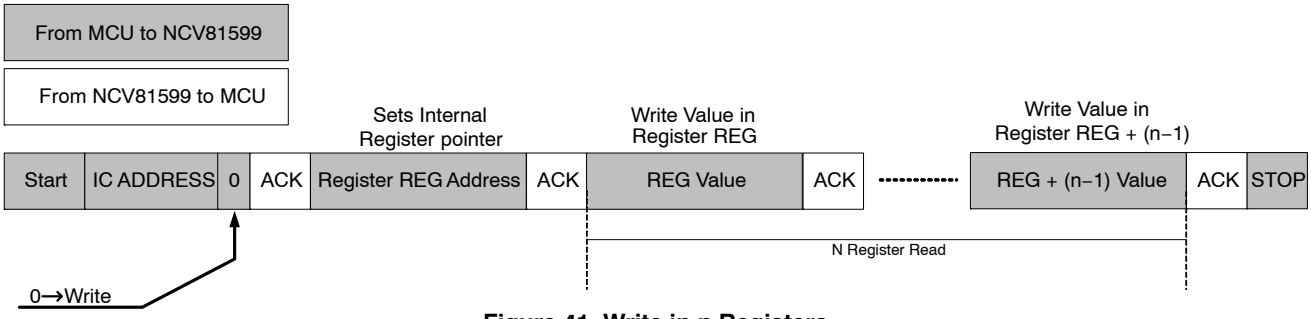

Figure 41. Write in n Registers

Share Feedback
Your Opinion Matters

I²C Communication Considerations

- It takes at least 3.3 ms for the digital core to reset all the registers, so it is recommended not to change the register value until at least 3.3 ms after the output voltage finish ramping to a steady state.
- It is recommended to avoid setting reference voltage profile below 0.1 V. When 0 V output is needed, it is recommended to ramp down the output by pulling EN pin low with external circuit or by I2C communication in the firmware. Setting output voltage profile to 0 via I2C is not recommended.

Share Feedback
Your Opinion Matters

DESIGN CONSIDERATIONS

dv/dt Induced False Turn On

In synchronous buck converters, there is a well−known phenomenon called “low side false turn−on,” or “dv/dt induced turn on”, which can be potentially dangerous for the switch itself and the reliability of the entire converter. The 4−switch buck−boost converter is not exempt from this issue. To make things worse, errors are made when designers simply copy the circuit parameters of a buck converter directly to the boost phase of the 4−switch buck−boost converter.

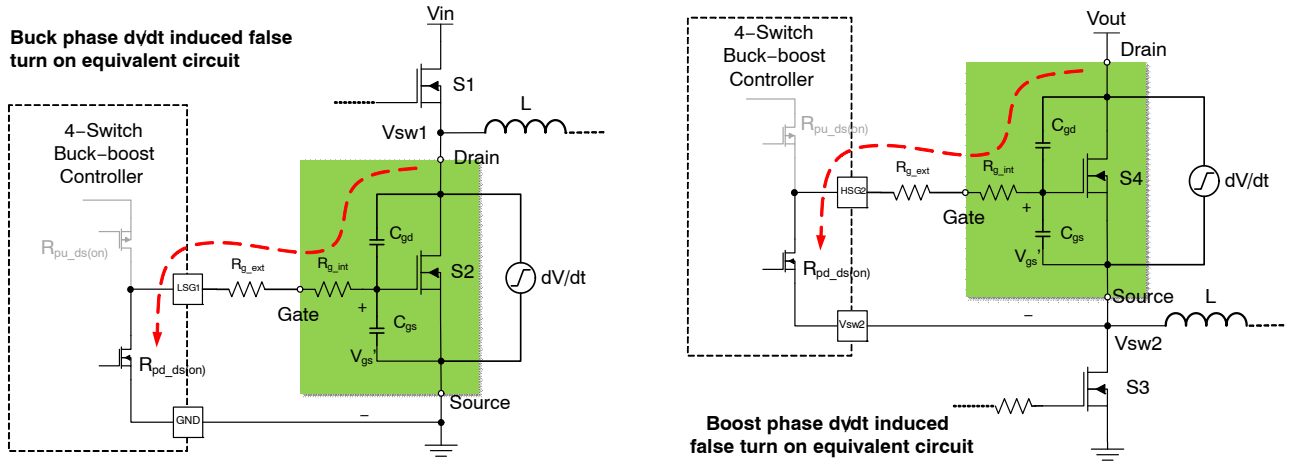

Figure 42. dv/dt Induced False Turn−on Equivalent Circuit of a 4−switch Buck−boost Converter

Figure 42 shows false turn on equivalent circuit of the buck phase and the boost phase at the moment a positive dv/dt transition appears across the drain−to−source junction. The detailed analysis of this phenomenon can be found in Gate Driver Design Considerations for 4−Switch Buck−Boost Converters.

Select the Switching Power MOSFET

The MOSFETs used in the power stage of the converter should have a maximum drain−to−source voltage rating that exceeds the sum of steady state maximum drain−to−source voltage and the turn−off voltage spike with a considerable margin (20%~50%).

When selecting the switching power MOSFET, the MOSFET gate capacitance should be considered carefully to avoid overloading the 5 V LDO. For one MOSFET, the allowed maximum total gate charge Q_g can be estimated by Equation 2:

$$Q_g = \frac{I_{driver}}{f_{sw}} \qquad \text{(eq. 2)}$$

where I_{driver} is the gate drive current and f_{sw} is the switching frequency.

It is recommended to select the MOSFETs with smaller than 3 nF input capacitance (C_{iss}). The gate threshold voltage should be higher than 1.0 V due to the internal adaptive non−overlap gate driver circuit.

In order to prevent dv/dt induced turn−on, the criteria for selecting a rectifying switch is based on the $Q_{gd}/Q_{gs(th)}$ ratio. $Q_{gs(th)}$ is the gate−to−source charge before the gate voltage reaches the threshold voltage. Lowering C_{gd} will reduce dv/dt induced voltage magnitude. Moreover, it also depends on dt/C_{gs}, V_{ds} and threshold voltage V_{th}. One way of interpreting the dv/dt induced turn−on problem is when V_{ds} reaches the input voltage, the Miller charge should be smaller than the total charge on C_{gs} at the V_{th} level, so that the rectifying switches will not be turned on. Then we will have the following relation:

$$V_{gs} = \frac{C_{gd}}{C_{gd} + C_{gs}} \times V_{ds} < V_{gs(th)} \qquad \text{(eq. 3)}$$

$$Q_{gd} < Q_{GS(th)} \qquad \text{(eq. 4)}$$

We can simply use Equation 4 to evaluate the rectifying device’s immunity to dv/dt induced turn on. Ideally, the charge Q_{gd} should not be greater than $1.5*Q_{gs(th)}$ in order to leave enough margin.

Select Gate Drive Resistors

To increase the converter’s dv/dt immunity, the dv/dt control is one approach which is usually related to the gate driver circuit. A first intuitive method is to use higher pull up resistance and gate resistance for the active switch. This would slow down the turn on of the active switch, effectively decreasing the dv/dt. Table 18 shows the recommended value for MOSFETs’ gate resistors.

Table 18. RECOMMENDED VALUE for Gate Resistors

Buck Phase		Boost Phase	
HSG1	(3.3~5.1)Ω	HSG2	0Ω
LSG1	0Ω	LSG2	(3.3~5.1)Ω

An alternative approach is to add an RC snubber circuit to the switching nodes V_{sw1} and V_{sw2}. This is the most direct

Share Feedback
Your Opinion Matters

way to reduce the dv/dt. The side effect of the above two methods are that losses would be increased because of slow switching speed.

LAYOUT GUIDELINES

Electrical Layout Considerations

Good electrical layout is a key to make sure proper operation, high efficiency, and noise reduction.

- **Current Sensing:** Run two dedicated trace with decent width in parallel (close to each other to minimize the loop area) from the two terminals of the input side or output side current sensing resistor to the IC. Place the common−mode RC filter components in general proximity of the controller.

Route the traces into the pads from the inside of the current sensing resistor. The drawing below shows how to rout the traces.

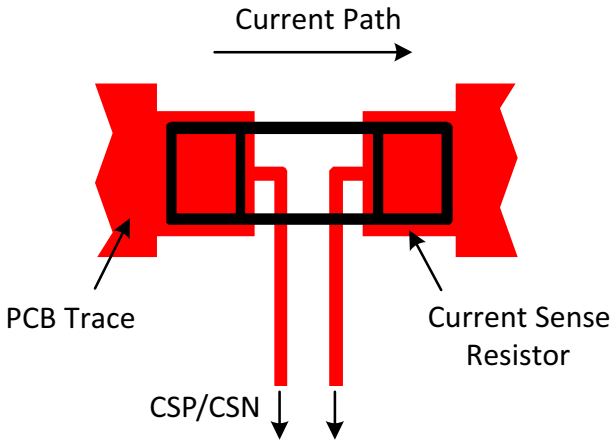

- **Gate Driver:** Run the high side gate, low side gate and switching node traces in a parallel fashion with decent width. Avoid any sensitive analog signal trace from crossing over or getting close. Recommend routing Vsw1/2 trace to high−side MOSFET source pin instead of copper pour area. The controller should be placed close to the switching MOSFETs gate terminals and keep the gate drive signal traces short for a clean MOSFET drive. It's OK to place the controller on the opposite side of the MOSFETs.
- **I2C Communication:** SDA and SCL pins are digital pins. Run SDA and SCL traces in parallel and reduce the loop area. Avoid any sensitive analog signal trace or noise source from crossing over or getting close.
- **V1 Pin:** Input for the internal LDO. Place a decoupling capacitor in general proximity of the controller. Run a dedicated trace from system input bus to the pin and do not route near the switching traces.
- **VCC Decoupling:** Place decoupling caps as close as possible to the controller VCC pin. Place the RC filter connecting with VDRV pin in general proximity of the controller. The filter resistor should be not higher than 10 Ω to prevent large voltage drop.
- **VDRV Decoupling:** Place decoupling caps as close as possible to the controller VDRV pin.
- **Input Decoupling:** The device should be well decoupled by input capacitors and input loop area should be as small as possible to reduce parasitic inductance, input voltage spike, and noise emission. Usually, a small low−ESL MLCC is placed very close to the input port. Place these capacitors on the same PCB layer with the MOSFETs instead of on different layers and using vias to make the connection.
- **Output Decoupling:** The output capacitors should be as close as possible to the load.
- **Switching Node:** The converter's switching node should be a copper pour to carry the current, but compact because it is also a noise source of electrical and magnetic field radiation. Place the inductor and the switching MOSFETs on the same layer of the PCB.
- **Bootstrap:** The bootstrap cap and an option resistor need to be in general close to the controller and directly connected between pin BST1/2 and pin SW1/2 respectively.
- **Ground:** It would be good to have separated ground planes for PGND and AGND and connect the AGND planes to PGND through a dedicated net tie or 0 Ω resistor.
- **Voltage Sense:** Route a "quiet" path for the input and output voltage sense. AGND could be used as a remote ground sense when differential sense is preferred.
- **Compensation Network:** The compensation network should be close to the controller. Keep FB trace short to minimize it capacitance to ground.

Thermal Layout Considerations

Good thermal layout helps power dissipation and junction temperature reduction.

- The exposed pads must be well soldered on the board.
- A four or more layers PCB board with solid ground planes is preferred for better heat dissipation.
- More free vias are welcome to be around IC and underneath the exposed pads to connect the inner ground layers to reduce thermal impedance.
- Use large area copper pour to help thermal conduction and radiation.
- Do not put the inductor too close to the IC, thus the heat sources are distributed.

Share Feedback
Your Opinion Matters

QFNW32 5x5, 0.5P
CASE 484AB
ISSUE D

DATE 07 SEP 2018

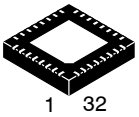

SCALE 2:1

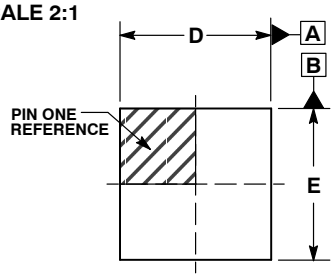

TOP VIEW

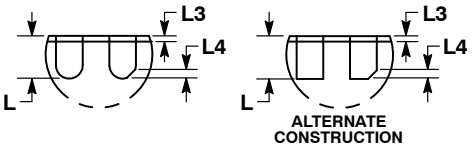

DETAIL A

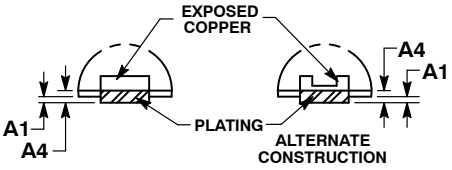

DETAIL B

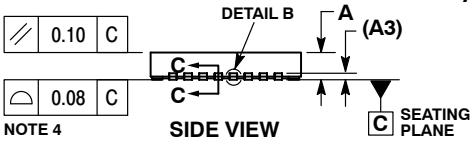

SIDE VIEW

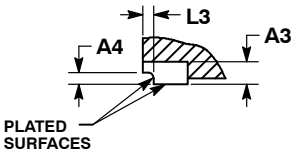

SECTION C–C

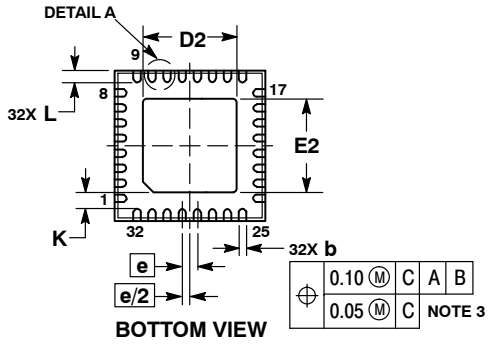

BOTTOM VIEW

NOTES:
1. DIMENSIONS AND TOLERANCING PER ASME Y14.5M, 1994.
2. CONTROLLING DIMENSION: MILLIMETERS.
3. DIMENSION b APPLIES TO PLATED TERMINAL AND IS MEASURED BETWEEN 0.10 AND 0.20MM FROM THE TERMINAL TIP.
4. COPLANARITY APPLIES TO THE EXPOSED PAD AS WELL AS THE TERMINALS.

	MILLIMETERS		
DIM	MIN	NOM	MAX
A	0.80	0.90	1.00
A1	---	---	0.05
A3		0.20 REF	
A4	0.10	---	---
b	0.20	0.25	0.30
D	4.90	5.00	5.10
D2	3.00	3.10	3.20
E	4.90	5.00	5.10
E2	3.00	3.10	3.20
e		0.50 BSC	
K	0.35	---	---
L	0.30	0.40	0.50
L3	---	---	0.10
L4		0.08 REF	

GENERIC MARKING DIAGRAM*

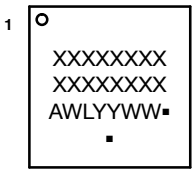

XXXXX = Specific Device Code
A = Assembly Location
WL = Wafer Lot
YY = Year
WW = Work Week
▪ = Pb–Free Package

(Note: Microdot may be in either location)

*This information is generic. Please refer to device data sheet for actual part marking. Pb–Free indicator, “G” or microdot “▪”, may or may not be present. Some products may not follow the Generic Marking.

RECOMMENDED SOLDERING FOOTPRINT*

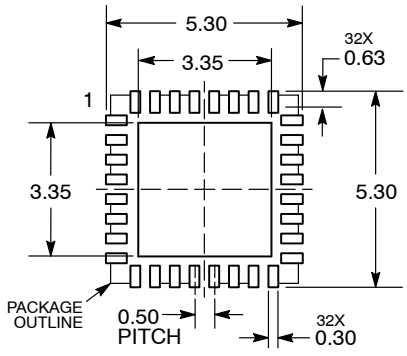

DIMENSION: MILLIMETERS

*For additional information on our Pb–Free strategy and soldering details, please download the ON Semiconductor Soldering and Mounting Techniques Reference Manual, SOLDERRM/D.

DOCUMENT NUMBER:	**98AON14940G**	Electronic versions are uncontrolled except when accessed directly from the Document Repository. Printed versions are uncontrolled except when stamped “CONTROLLED COPY” in red.	
DESCRIPTION:	**QFNW32 5x5, 0.5P**		**PAGE 1 OF 1**

onsemi and onsemi are trademarks of Semiconductor Components Industries, LLC dba **onsemi** or its subsidiaries in the United States and/or other countries. **onsemi** reserves the right to make changes without further notice to any products herein. **onsemi** makes no warranty, representation or guarantee regarding the suitability of its products for any particular purpose, nor does **onsemi** assume any liability arising out of the application or use of any product or circuit, and specifically disclaims any and all liability, including without limitation special, consequential or incidental damages. **onsemi** does not convey any license under its patent rights nor the rights of others.

© Semiconductor Components Industries, LLC, 2016

QFN32 5x5, 0.5P
CASE 485CE
ISSUE O

DATE 07 FEB 2012

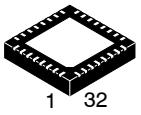

SCALE 2:1

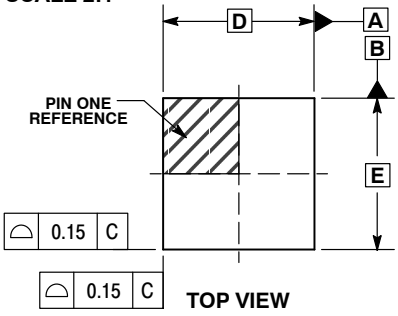

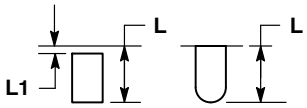

DETAIL A
ALTERNATE CONSTRUCTIONS

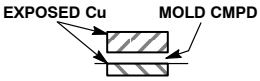

DETAIL B
ALTERNATE CONSTRUCTION

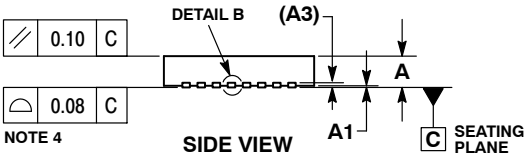

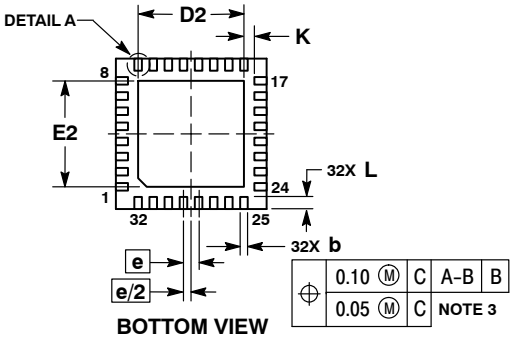

NOTES:
1. DIMENSIONING AND TOLERANCING PER ASME Y14.5M, 1994.
2. CONTROLLING DIMENSION: MILLIMETERS.
3. DIMENSION b APPLIES TO PLATED TERMINAL AND IS MEASURED BETWEEN 0.15 AND 0.30 MM FROM THE TERMINAL TIP.
4. COPLANARITY APPLIES TO THE EXPOSED PAD AS WELL AS THE TERMINALS.

	MILLIMETERS	
DIM	MIN	MAX
A	0.80	1.00
A1	---	0.05
A3	0.20 REF	
b	0.20	0.30
D	5.00 BSC	
D2	3.40	3.60
E	5.00 BSC	
E2	3.40	3.60
e	0.50 BSC	
K	0.20	---
L	0.30	0.50
L1	---	0.15

GENERIC MARKING DIAGRAM*

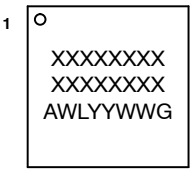

XXXXX = Specific Device Code
A = Assembly Location
WL = Wafer Lot
YY = Year
WW = Work Week
G = Pb−Free Package

*This information is generic. Please refer to device data sheet for actual part marking. Pb−Free indicator, “G” or microdot “▪”, may or may not be present. Some products may not follow the Generic Marking.

RECOMMENDED SOLDERING FOOTPRINT*

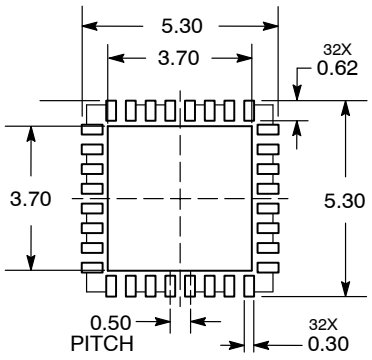

DIMENSIONS: MILLIMETERS

*For additional information on our Pb−Free strategy and soldering details, please download the **onsemi** Soldering and Mounting Techniques Reference Manual, SOLDERRM/D.

DOCUMENT NUMBER:	**98AON67073E**	Electronic versions are uncontrolled except when accessed directly from the Document Repository. Printed versions are uncontrolled except when stamped “CONTROLLED COPY” in red.
DESCRIPTION:	**QFN32 5x5, 0.5P**	**PAGE 1 OF 1**

onsemi and onsemi are trademarks of Semiconductor Components Industries, LLC dba **onsemi** or its subsidiaries in the United States and/or other countries. **onsemi** reserves the right to make changes without further notice to any products herein. **onsemi** makes no warranty, representation or guarantee regarding the suitability of its products for any particular purpose, nor does **onsemi** assume any liability arising out of the application or use of any product or circuit, and specifically disclaims any and all liability, including without limitation special, consequential or incidental damages. **onsemi** does not convey any license under its patent rights nor the rights of others.

onsemi, , and other names, marks, and brands are registered and/or common law trademarks of Semiconductor Components Industries, LLC dba "**onsemi**" or its affiliates and/or subsidiaries in the United States and/or other countries. **onsemi** owns the rights to a number of patents, trademarks, copyrights, trade secrets, and other intellectual property. A listing of **onsemi**'s product/patent coverage may be accessed at www.onsemi.com/site/pdf/Patent−Marking.pdf. **onsemi** reserves the right to make changes at any time to any products or information herein, without notice. The information herein is provided "as−is" and **onsemi** makes no warranty, representation or guarantee regarding the accuracy of the information, product features, availability, functionality, or suitability of its products for any particular purpose, nor does **onsemi** assume any liability arising out of the application or use of any product or circuit, and specifically disclaims any and all liability, including without limitation special, consequential or incidental damages. Buyer is responsible for its products and applications using **onsemi** products, including compliance with all laws, regulations and safety requirements or standards, regardless of any support or applications information provided by **onsemi**. "Typical" parameters which may be provided in **onsemi** data sheets and/or specifications can and do vary in different applications and actual performance may vary over time. All operating parameters, including "Typicals" must be validated for each customer application by customer's technical experts. **onsemi** does not convey any license under any of its intellectual property rights nor the rights of others. **onsemi** products are not designed, intended, or authorized for use as a critical component in life support systems or any FDA Class 3 medical devices or medical devices with a same or similar classification in a foreign jurisdiction or any devices intended for implantation in the human body. Should Buyer purchase or use **onsemi** products for any such unintended or unauthorized application, Buyer shall indemnify and hold **onsemi** and its officers, employees, subsidiaries, affiliates, and distributors harmless against all claims, costs, damages, and expenses, and reasonable attorney fees arising out of, directly or indirectly, any claim of personal injury or death associated with such unintended or unauthorized use, even if such claim alleges that **onsemi** was negligent regarding the design or manufacture of the part. **onsemi** is an Equal Opportunity/Affirmative Action Employer. This literature is subject to all applicable copyright laws and is not for resale in any manner.

ADDITIONAL INFORMATION

TECHNICAL PUBLICATIONS:
Technical Library: www.onsemi.com/design/resources/technical−documentation
onsemi Website: www.onsemi.com

ONLINE SUPPORT: www.onsemi.com/support
For additional information, please contact your local Sales Representative at www.onsemi.com/support/sales