High Speed Low Power CAN Transceiver

NCV7349

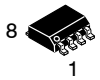

SOIC-8
CASE 751AZ

Description

The NCV7349 CAN transceiver is the interface between a controller area network (CAN) protocol controller and the physical bus. The transceiver provides differential transmit capability to the bus and differential receive capability to the CAN controller.

The NCV7349 is a new addition to the CAN high-speed transceiver family complementing NCV734x CAN family and previous generations of CAN transceivers such as AMIS42665, AMIS3066x, etc.

Due to the wide common-mode voltage range of the receiver inputs and other design features, the NCV7349 is able to reach outstanding levels of electromagnetic susceptibility (EMS). Similarly, very low electromagnetic emission (EME) is achieved by the excellent matching of the output signals.

Features

- Compatible with the ISO 11898-5 Standard
- High Speed (up to 1 Mbps)
- V_{IO} Pin on NCV7349-3 Version Allowing Direct Interfacing with 3 V to 5 V Microcontrollers
- Very Low Current Standby Mode with Wake-up via the Bus
- Low Electromagnetic Emission (EME) and Extremely High Electromagnetic Immunity
- Very Low EME without Common-mode (CM) Choke
- No Disturbance of the Bus Lines with an Un-powered Node
- Transmit Data (TxD) Dominant Time-out Function
- Under All Supply Conditions the Chip Behaves Predictably
- Very High ESD Robustness of Bus Pins, >10 kV System ESD Pulses
- Thermal Protection
- Bus Pins Short Circuit Proof to Supply Voltage and Ground
- Bus Pins Protected Against Transients in an Automotive
- These are Pb-Free Devices

Quality

- NCV Prefix for Automotive and Other Applications Requiring Unique Site and Control Change Requirements; AEC-Q100 Qualified and PPAP Capable

Typical Applications

- Automotive
- Industrial Networks

PIN ASSIGNMENT

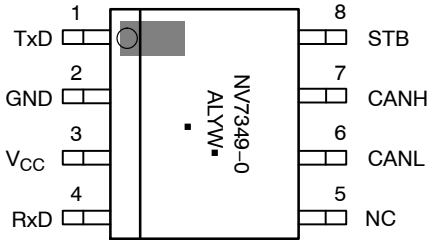

NCV7349D10R2G
(Top View)

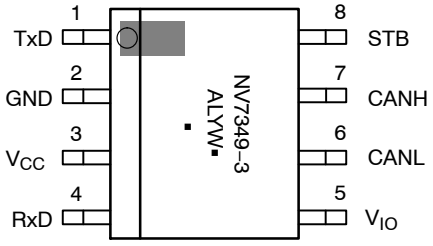

NCV7349D13R2G
(Top View)

MARKING DIAGRAM

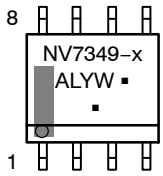

NV7349–x = Specific Device Code
x = 0 or 3
A = Assembly Location
L = Wafer Lot
Y = Year
W = Work Week
▪ = Pb-Free Package

(Note: Microdot may be in either location)

ORDERING INFORMATION

See detailed ordering and shipping information in the package dimensions section on page 11 of this data sheet.

© Semiconductor Components Industries, LLC, 2014

Table 1. KEY TECHNICAL CHARACTERISTICS AND OPERATING RANGES

Symbol	Parameter	Conditions	Min	Max	Unit
V_{CC}	Power supply voltage	(Note 1)	4.75 (4.5)	5.25 (5.5)	V
V_{UV}	Undervoltage detection voltage on pin Vcc		2	4	V
V_{CANH}	DC voltage at pin CANH	$0 < V_{CC} < 5.5$ V; no time limit	−50	+50	V
V_{CANL}	DC voltage at pin CANL	$0 < V_{CC} < 5.5$ V; no time limit	−50	+50	V
$V_{CANH,Lmax}$	DC voltage at pin CANH and CANL during load dump condition	$0 < V_{CC} < 5.5$ V, less than one second	–	+58	V
V_{ESD}	Electrostatic discharge voltage	IEC 61000−4−2 at pins CANH and CANL	−15	15	kV
$V_{O(dif)(bus_dom)}$	Differential bus output voltage in dominant state	$45\ \Omega < R_{LT} < 65\ \Omega$	1.5	3	V
CM-range	Input common-mode range for comparator	Guaranteed differential receiver threshold and leakage current	−35	+35	V
C_{load}	Load capacitance on IC outputs		–	15	pF
t_{pd0}	Propagation delay (NCV7349-0 version)	See Figure 7	–	245	ns
t_{pd3}	Propagation delay (NCV7349-3 version)	See Figure 7	–	250	ns
T_J	Junction temperature		−40	150	°C

Functional operation above the stresses listed in the Recommended Operating Ranges is not implied. Extended exposure to stresses beyond the Recommended Operating Ranges limits may affect device reliability.

1. In the range of 4.5 V to 4.75 V and from 5.25 V to 5.5 V the chip is fully functional; some parameters may be outside of the specification.

Share Feedback
Your Opinion Matters

BLOCK DIAGRAM

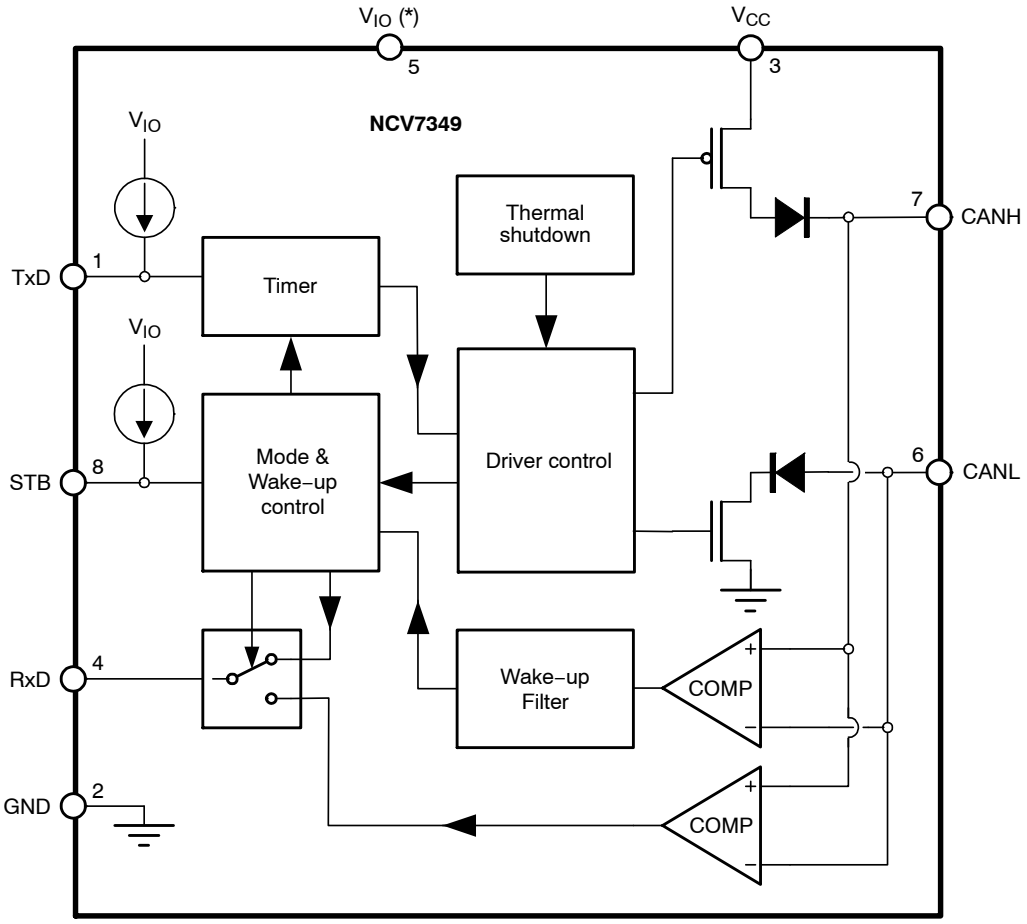

* On NCV7349-0 version pin 5 is not connected. V_{IO} supply is provided by V_{CC}.

Figure 1. Block Diagram

TYPICAL APPLICATION

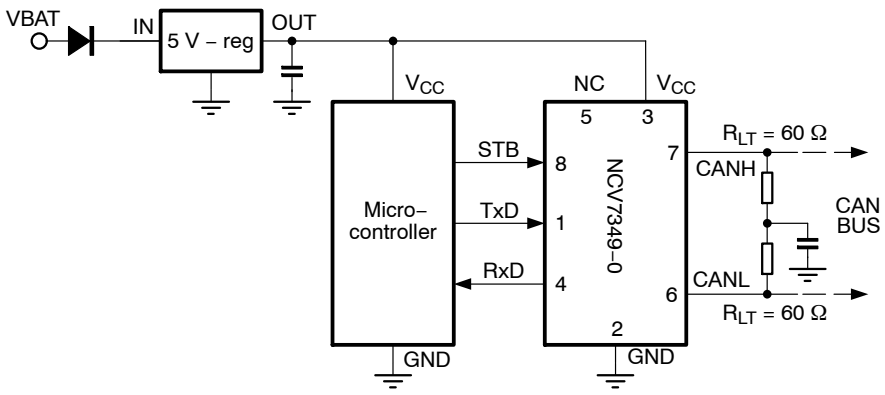

Figure 2. Application Diagram, NCV7349-0

Share Feedback
Your Opinion Matters

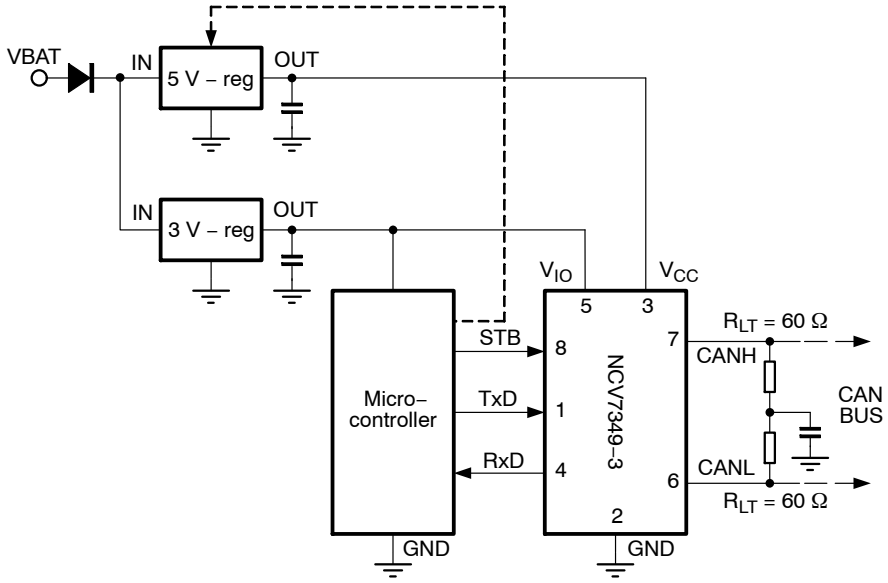

Figure 3. Application Diagram, NCV7349-3

Table 2. PIN FUNCTION DESCRIPTION

Pin	Name	Description
1	TxD	Transmit data input; low input → Driving dominant on bus; internal pull-up current
2	GND	Ground
3	V_{CC}	Supply voltage
4	RxD	Receive data output; bus in dominant → low output
5 5	NC V_{IO}	Not connected. On NCV7349-0 only. Input / Output pins supply voltage. On NCV7349-3 only
6	CANL	Low-level CAN bus line (low in dominant mode)
7	CANH	High-level CAN bus line (high in dominant mode)
8	STB	Standby mode control input; internal pull-up current

Share Feedback
Your Opinion Matters

FUNCTIONAL DESCRIPTION

NCV7349 has two versions which differ from each other only by function of pin 5.

NCV7349-0: Pin 5 is not connected. (see Figure 2)

NCV7349-3: Pin 5 is V_{IO} pin, which is supply pin for transceiver digital inputs/output (supplying pins TxD, RxD, STB) The V_{IO} pin should be connected to microcontroller supply pin. By using V_{IO} supply pin shared with microcontroller the I/O levels between microcontroller and transceiver are properly adjusted. This adjustment allows in applications with microcontroller supply down to 3 V to easy communicate with the transceiver. (See Figure 3)

Operating Modes

NCV7349 provides two modes of operation as illustrated in Table 3. These modes are selectable through pin STB.

Table 3. OPERATING MODES

Pin STB	Mode	Pin RxD	
		Low	High
Low	Normal	Bus dominant	Bus recessive
High	Standby	Wake-up request detected	No wake-up request detected

Normal Mode

In the normal mode, the transceiver is able to communicate via the bus lines. The signals are transmitted and received to the CAN controller via the pins TxD and RxD. The slopes on the bus lines outputs are optimized to give low EME.

Standby Mode

In standby mode both the transmitter and receiver are disabled and a very low-power differential receiver monitors the bus lines for CAN bus activity. The bus lines are terminated to ground and supply current is reduced to a minimum, typically 10 μA. When a wake-up request is detected by the low-power differential receiver, the signal is first filtered and then verified as a valid wake signal after a time period of t_{wake}, the RxD pin is driven low by the transceiver to inform the controller of the wake-up request.

V_{IO} Supply pin

The V_{IO} pin available only on NCV7349-3 version should be connected to microcontroller supply pin. By using V_{IO} supply pin shared with microcontroller the I/O levels between microcontroller and transceiver are properly adjusted. See Figure 3. Pin V_{IO} on NCV7349-3 does not provide the internal supply voltage for low-power differential receiver of the transceiver. Detection of wake-up request is not possible when there is no supply voltage on pin V_{CC}.

Wake-up

When a valid wake-up (dominant state longer than t_{wake}) is received during the standby mode the RxD pin is driven low. The wake-up detection is not latched: RxD returns to High state after $t_{dwakedr}$ when the bus signal is released back to recessive - see Figure 4.

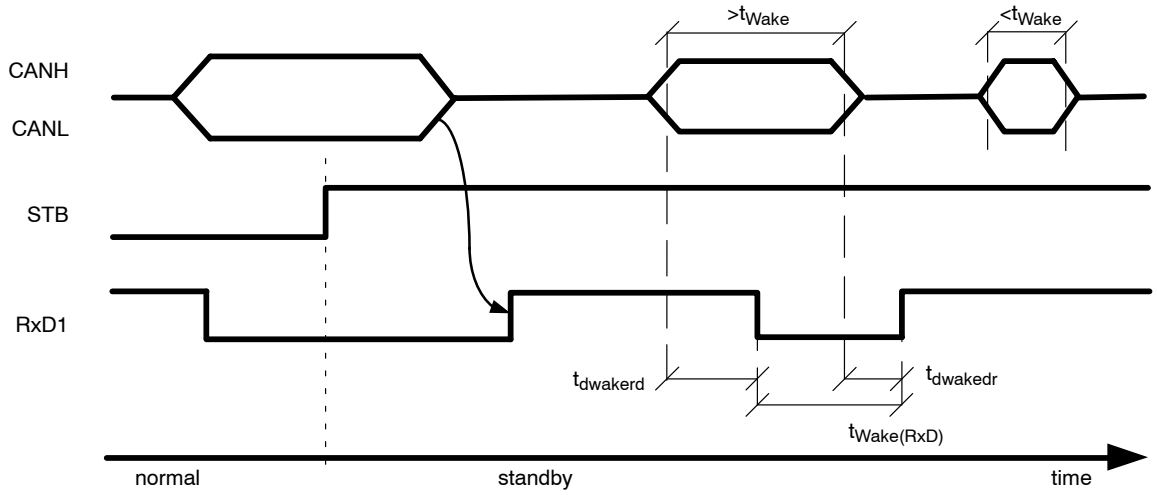

Figure 4. NCV7349 Wake-up Behavior

Share Feedback
Your Opinion Matters

Over-temperature Detection

A thermal protection circuit protects the IC from damage by switching off the transmitter if the junction temperature exceeds a value of approximately 170°C. Because the transmitter dissipates most of the power, the power dissipation and temperature of the IC is reduced. All other IC functions continue to operate. The transmitter off-state resets when the temperature decreases below the shutdown threshold and pin TxD goes high. The thermal protection circuit is particularly needed when a bus line short circuits.

TxD Dominant Time-out Function

A TxD dominant time-out timer circuit prevents the bus lines being driven to a permanent dominant state (blocking all network communication) if pin TxD is forced permanently low by a hardware and/or software application failure. The timer is triggered by a negative edge on pin TxD. If the duration of the low-level on pin TxD exceeds the internal timer value $t_{dom(TxD)}$, the transmitter is disabled, driving the bus into a recessive state. The timer is reset by a positive edge on pin TxD.

This TxD dominant time-out time ($t_{dom(TxD)}$) defines the minimum possible bit rate to 15 kbps.

Fail Safe Features

A current-limiting circuit protects the transmitter output stage from damage caused by accidental short circuit to either positive or negative supply voltage, although power dissipation increases during this fault condition.

Undervoltage on V_{CC} pin prevents the chip sending data on the bus when there is not enough V_{CC} supply voltage. After supply is recovered TxD pin must be first released to high to allow sending dominant bits again. Recovery time from undervoltage detection is equal to $t_{d(stb-nm)}$ time.

V_{IO} supply dropping below V_{UVDVIO} undervoltage detection level will cause the transmitter to disengage from the bus (no bus loading) until the V_{IO} voltage recovers (NCV7349-3 version only).

The pins CANH and CANL are protected from automotive electrical transients (according to ISO 7637; see Figure 7). Pins TxD and STB are pulled high internally should the input become disconnected. Pins TxD, STB and RxD will be floating, preventing reverse supply should the V_{IO} supply be removed.

Share Feedback
Your Opinion Matters

ELECTRICAL CHARACTERISTICS

Definitions

All voltages are referenced to GND (pin 2). Positive currents flow into the IC. Sinking current means the current is flowing into the pin; sourcing current means the current is flowing out of the pin.

ABSOLUTE MAXIMUM RATINGS

Table 4. ABSOLUTE MAXIMUM RATINGS

Symbol	Parameter	Conditions	Min.	Max.	Unit
V_{SUP}	Supply voltage V_{CC}, V_{IO}		−0.3	+6	V
V_{CANH}	DC voltage at pin CANH	0 < V_{CC} < 5.5 V; no time limit	−50	+50	V
V_{CANL}	DC voltage at pin CANL	0 < V_{CC} < 5.5 V; no time limit	−50	+50	V
V_{IO}	DC voltage at pin TxD, RxD, STB		−0.3	6	V
V_{esd}	Electrostatic discharge voltage at all pins	(Note 2) (Note 3)	−6 500	6 500	kV V
	Electrostatic discharge voltage at CANH and CANL pins	(Note 4)	−10	10	kV
V_{schaff}	Transient voltage	(Note 5)	−150	100	V
Latch-up	Static latch-up at all pins	(Note 6)	–	150	mA
T_{stg}	Storage temperature		−55	+150	°C
T_A	Ambient temperature		−40	+125	°C
T_J	Maximum junction temperature		−40	+170	°C

Stresses exceeding those listed in the Maximum Ratings table may damage the device. If any of these limits are exceeded, device functionality should not be assumed, damage may occur and reliability may be affected.

2. Standardized human body model electrostatic discharge (ESD) pulses in accordance to EIA-JESD22. Equivalent to discharging a 100 pF capacitor through a 1.5 kΩ resistor.
3. Standardized charged device model ESD pulses when tested according to ESD-STM5.3.1-1999.
4. System human body model electrostatic discharge (ESD) pulses. Equivalent to discharging a 150 pF capacitor through a 330 Ω resistor referenced to GND.
5. Pulses 1, 2a, 3a and 3b according to ISO 7637 part 3. Indicative values based on structural similarity to NCV7340 where results were verified by external test house.
6. Static latch-up immunity: Static latch-up protection level when tested according to EIA/JESD78.

Table 5. THERMAL CHARACTERISTICS

Symbol	Parameter	Conditions	Value	Unit
$R_{\theta JA_1}$	Thermal Resistance Junction-to-Air, 1S0P PCB (Note 7)	Free air	125	K/W
$R_{\theta JA_2}$	Thermal Resistance Junction-to-Air, 2S2P PCB (Note 8)	Free air	75	K/W

7. Test board according to EIA/JEDEC Standard JESD51-3, signal layer with 10% trace coverage
8. Test board according to EIA/JEDEC Standard JESD51-7, signal layers with 10% trace coverage

Share Feedback
Your Opinion Matters

ELECTRICAL CHARACTERISTICS

Table 6. ELECTRICAL CHARACTERISTICS (V_{CC} = 4.75 V to 5.25 V; V_{IO} = 2.8 V to 5.5 V (NCV7349-3 only); T_J = −40 to +150°C; R_{LT} = 60 Ω unless specified otherwise. On chip versions without V_{IO} pin, reference voltage for all digital inputs and outputs is V_{CC} instead of V_{IO}.)

Symbol	Parameter	Conditions	Min	Typ	Max	Unit
SUPPLY (Pin V_{CC})						
I_{CC}	Supply current	Dominant; V_{TxD} = 0 V Recessive; V_{TxD} = V_{IO}	–	48 6	75 10	mA
I_{CCS}	Supply current in standby mode	$T_J \le 100°C$, (Note 9)	–	10	15	μA
V_{UVDVCC}	Undervoltage detection voltage on V_{CC} pin		2	3	4	V
SUPPLY (pin V_{IO}) on NCV7349-3 Version Only						
V_{IO}	Supply voltage on pin V_{IO}		2.8	–	5.5	V
I_{IOS}	Supply current on pin V_{IO} in standby mode	Standby mode	–	1	–	μA
I_{IONM}	Supply current on pin V_{IO} in normal mode	Dominant; V_{TxD} = 0 V Recessive; V_{TxD} = V_{IO} For $V_{IO} \le V_{CC}$	–	–	1 0.2	mA
V_{UVDVIO}	Undervoltage detection voltage on V_{IO} pin		1.3	–	2.7	V
TRANSMITTER DATA INPUT (Pin TxD)						
V_{IH}	High-level input voltage	Output recessive	2.0	–	V_{IO}	V
V_{IL}	Low-level input voltage	Output dominant	−0.3	–	+0.8	V
I_{IH}	High-level input current	V_{TxD} = V_{IO}	−5	0	+5	μA
I_{IL}	Low-level input current	V_{TxD} = 0 V	−350	−200	–	μA
C_i	Input capacitance	(Note 9)	–	5	10	pF
TRANSMITTER MODE SELECT (Pin STB)						
V_{IH}	High-level input voltage	Standby mode	2.0	–	V_{IO}	V
V_{IL}	Low-level input voltage	Normal mode	−0.3	–	+0.8	V
I_{IH}	High-level input current	V_{STB} = V_{IO}	−5	0	+5	μA
I_{IL0}	Low-level input current, NCV7349-0	V_{STB} = 0 V	−10	−4	−1	μA
I_{IL3}	Low-level input current, NCV7349-3	V_{STB} = 0 V	−40	−20	−4	μA
C_i	Input capacitance	(Note 9)	–	5	10	pF
RECEIVER DATA OUTPUT (Pin RxD)						
I_{OH}	High-level output current	Normal mode, V_{RxD} = V_{IO} − 0.4 V	−1	−0.4	−0.1	mA
I_{OL}	Low-level output current	V_{RxD} = 0.4 V	1.6	6	12	mA
V_{OH}	High-level output voltage, Weaker RxD pin in Standby mode is on NCV7349-0 version only	Standby mode, I_{RxD} = −100 μA	V_{CC} − 1.1	V_{CC} − 0.7	V_{CC} − 0.4	V
BUS LINES (Pins CANH and CANL)						
$V_{o(reces)}$ (norm)	Recessive bus voltage on pins CANH and CANL	V_{TxD} = V_{IO}; no load; normal mode	2.0	2.5	3.0	V
$V_{o(reces)}$ (stby)	Recessive bus voltage on pins CANH and CANL	V_{TxD} = V_{IO}; no load; standby mode	−100	0	100	mV
$I_{o(reces)}$ (CANH)	Recessive output current at pin CANH	−35 V < V_{CANH} < +35 V; 0 V < V_{CC} < 5.25 V	−2.5	–	+2.5	mA
$I_{o(reces)}$ (CANL)	Recessive output current at pin CANL	−35 V < V_{CANL} < +35 V; 0 V < V_{CC} < 5.25 V	−2.5	–	+2.5	mA

Share Feedback
Your Opinion Matters

Table 6. ELECTRICAL CHARACTERISTICS (continued) (V_{CC} = 4.75 V to 5.25 V; V_{IO} = 2.8 V to 5.5 V (NCV7349-3 only); T_J = −40 to +150°C; R_{LT} = 60 Ω unless specified otherwise. On chip versions without V_{IO} pin, reference voltage for all digital inputs and outputs is V_{CC} instead of V_{IO}.)

Symbol	Parameter	Conditions	Min	Typ	Max	Unit
BUS LINES (Pins CANH and CANL) (continued)						
$I_{LI(CANH)}$	Input leakage current to pin CANH	0 Ω < R(V_{CC} to GND) < 1 MΩ V_{CANL} = V_{CANH} = 5 V	−10	0	10	μA
$I_{LI(CANL)}$	Input leakage current to pin CANL	0 Ω < R(V_{CC} to GND) < 1 MΩ V_{CANL} = V_{CANH} = 5 V	−10	0	10	μA
$V_{o(dom)}$ (CANH)	Dominant output voltage at pin CANH	V_{TxD} = 0 V	3.0	3.6	4.25	V
$V_{o(dom)}$ (CANL)	Dominant output voltage at pin CANL	V_{TxD} = 0 V	0.5	1.4	1.75	V
$V_{o(dif)}$ (bus_dom)	Differential bus output voltage (V_{CANH} - V_{CANL})	V_{TxD} = 0 V; dominant; 45 Ω < R_{LT} < 65 Ω	1.5	2.25	3.0	V
$V_{o(dif)}$ (bus_rec)	Differential bus output voltage (V_{CANH} - V_{CANL})	V_{TxD} = V_{IO}; recessive; no load	−120	0	+50	mV
$I_{o(sc)}$ (CANH)	Short circuit output current at pin CANH	V_{CANH} = 0 V; V_{TxD} = 0 V	−100	−70	−45	mA
$I_{o(sc)}$ (CANL)	Short circuit output current at pin CANL	V_{CANL} = 36 V; V_{TxD} = 0 V	45	70	100	mA
$V_{i(dif)R}$ (th)	Differential receiver threshold voltage − Dominant to Recessive (see Figure 6)	−2 V < V_{CANL} < +7 V; −2 V < V_{CANH} < +7 V	0.5	0.6	0.7	V
$V_{i(dif)D}$ (th)	Differential receiver threshold voltage − Recessive to Dominant (see Figure 6)	−2 V < V_{CANL} < +7 V; −2 V < V_{CANH} < +7 V	0.7	0.8	0.9	V
$V_{ihcmR(dif)}$ (th)	Differential receiver threshold voltage − Dominant to Recessive (see Figure 6)	−35 V < V_{CANL} < +35 V; −35 V < V_{CANH} < +35 V	0.4	−	0.8	V
$V_{ihcmD(dif)}$ (th)	Differential receiver threshold voltage − Recessive to Dominant (see Figure 6)	−35 V < V_{CANL} < +35 V; −35 V < V_{CANH} < +35 V	0.6	−	1	V
$V_{ihcmD12(dif)}$ (th)	Differential receiver threshold voltage − Both transitions (see Figure 6)	−12 V < V_{CANL} < +12 V; −12 V < V_{CANH} < +12 V	0.5	−	0.9	V
$V_{i(dif)}$ (hys)	Differential receiver input voltage hysteresis	−2 V < V_{CANL} < +7 V; −2 V < V_{CANH} < +7 V	100	200	300	mV
$V_{i(dif)}$ (th)_STDBY	Differential receiver threshold voltage in standby mode	−12 V < V_{CANL} < +12 V; −12 V < V_{CANH} < +12 V	0.4	0.8	1.15	V
$R_{i(cm)}$ (CANH)	Common-mode input resistance at pin CANH		15	26	37	kΩ
$R_{i(cm)}$ (CANL)	Common-mode input resistance at pin CANL		15	26	37	kΩ
$R_{i(cm)}$ (m)	Matching between pin CANH and pin CANL common mode input resistance	V_{CANH} = V_{CANL}	−3	0	+3	%
$R_{i(dif)}$	Differential input resistance		25	50	75	kΩ
$C_{i(CANH)}$	Input capacitance at pin CANH	V_{TxD} = V_{IO}; (Note 9)	−	−	30	pF
$C_{i(CANL)}$	Input capacitance at pin CANL	V_{TxD} = V_{IO}; (Note 9)	−	−	30	pF
$C_{i(dif)}$	Differential input capacitance	V_{TxD} = V_{IO}; (Note 9)	−	3.75	10	pF
THERMAL SHUTDOWN						
$T_{J(sd)}$	Shutdown junction temperature	Junction temperature rising	150	170	185	°C
TIMING CHARACTERISTICS (see Figure 5 and Figure 8)						
$t_{d(TxD-BUSon)}$	Delay TxD to bus active	C_i = 100 pF between CANH to CANL	−	50	−	ns
$t_{d(TxD-BUSoff)}$	Delay TxD to bus inactive	C_i = 100 pF between CANH to CANL	−	60	−	ns
$t_{d(BUSon-RxD)}$	Delay bus active to RxD	C_{RxD} = 15 pF	−	60	−	ns

Share Feedback
Your Opinion Matters

Table 6. ELECTRICAL CHARACTERISTICS (continued) (V_{CC} = 4.75 V to 5.25 V; V_{IO} = 2.8 V to 5.5 V (NCV7349-3 only); T_J = −40 to +150°C; R_{LT} = 60 Ω unless specified otherwise. On chip versions without V_{IO} pin, reference voltage for all digital inputs and outputs is V_{CC} instead of V_{IO}.)

Symbol	Parameter	Conditions	Min	Typ	Max	Unit
TIMING CHARACTERISTICS (see Figure 5 and Figure 8)						
$t_{d(BUSoff-RxD)}$	Delay bus inactive to RxD	C_{RxD} = 15 pF	–	60	–	ns
t_{pd}	Propagation delay TxD to RxD (NCV7349-0 version)	C_i = 100 pF between CANH to CANL	–	125	245	ns
	Propagation delay TxD to RxD (NCV7349-3 version)	C_i = 100 pF between CANH to CANL	–	130	250	ns
$t_{d(stb-nm)}$	Delay standby mode to normal mode		5	8	20	μs
t_{wake}	Dominant time for wake-up via bus		0.5	2.5	5	μs
$t_{dwakerd}$	Delay to flag wake event (recessive to dominant transitions) (See Figure 4)	Valid bus wake-up event, C_{RxD} = 15 pF	1	4.5	10	μs
$t_{dwakedr}$	Delay to flag wake event (dominant to recessive transitions) (See Figure 4)	Valid bus wake-up event, C_{RxD} = 15 pF	0.5	3.3	7	μs
$t_{wake(RxD)}$	Minimum pulse width on RxD (See Figure 4)	5 μs t_{WAKE}, C_{RxD} = 15 pF	0.5	–	–	μs
$t_{dom(TxD)}$	TxD dominant time for time-out	V_{TxD} = 0 V	1.2	2.6	4	ms

Product parametric performance is indicated in the Electrical Characteristics for the listed test conditions, unless otherwise noted. Product performance may not be indicated by the Electrical Characteristics if operated under different conditions.

9. Values based on design and characterization, not tested in production

MEASUREMENT SETUPS AND DEFINITIONS

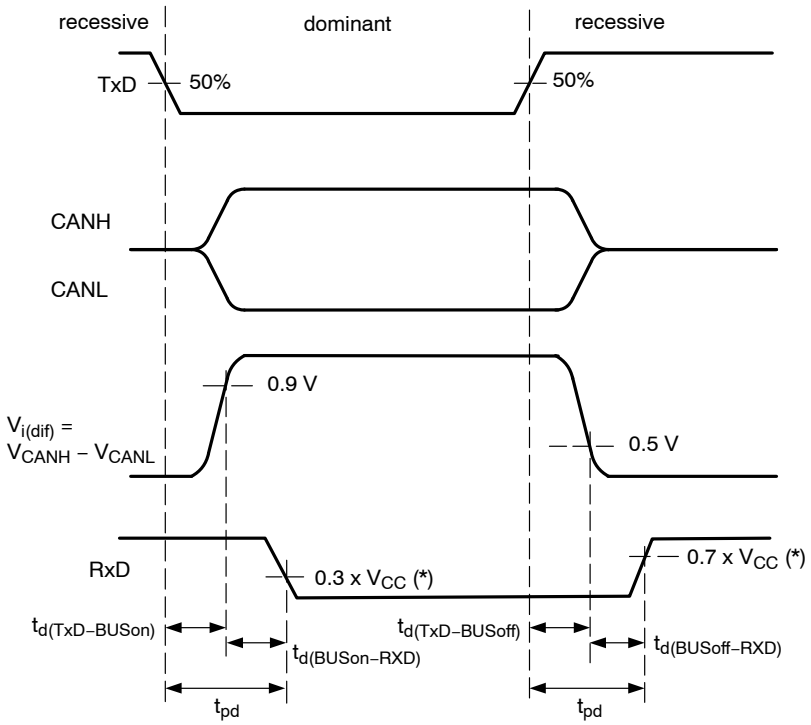

* On NCV7349−3 V_{CC} is replaced by V_{IO}

Figure 5. Transceiver Timing Diagram

Share Feedback
Your Opinion Matters

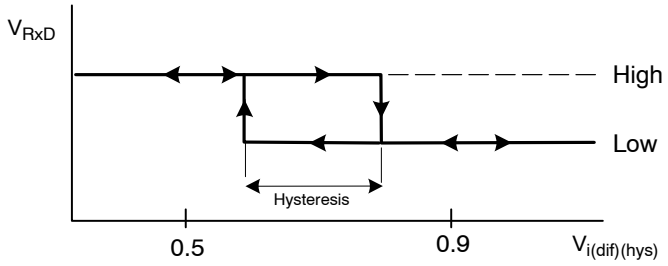

Figure 6. Hysteresis of the Receiver

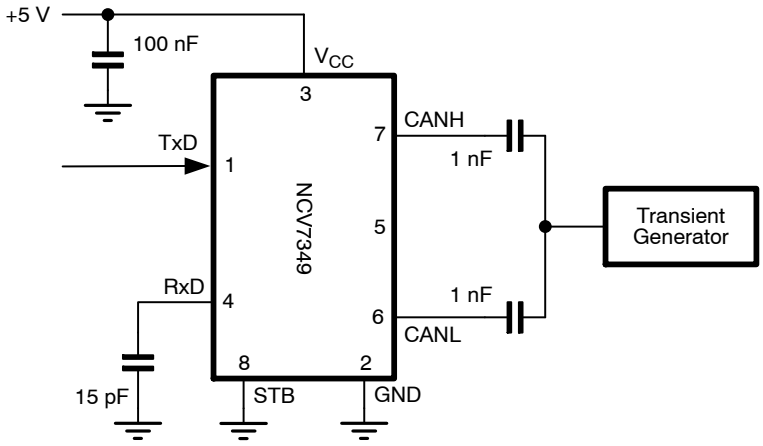

Figure 7. Test Circuit for Automotive Transients

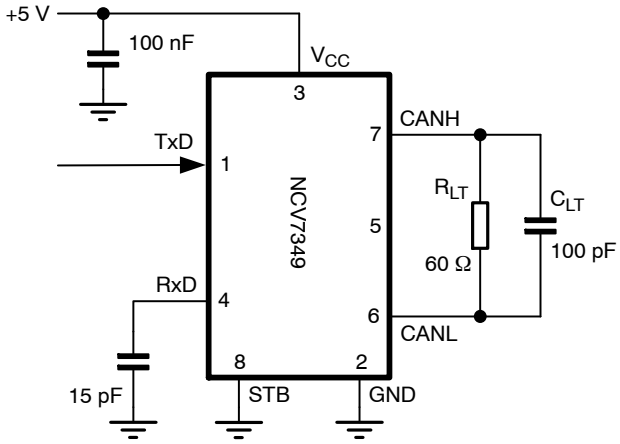

Figure 8. Test Circuit for Timing Characteristics

DEVICE ORDERING INFORMATION

Part Number	Description	Temperature Range	Package	Shipping†
NCV7349D10R2G	High Speed Low Power CAN Transceiver for the Japanese Market	−40°C to +125°C	SOIC 150 8 GREEN (Matte Sn, JEDEC MS-012) (Pb-Free)	3,000 / Tape & Reel
NCV7349D13R2G	High Speed Low Power CAN Transceiver for the Japanese Market with V_{IO} pin			

†For information on tape and reel specifications, including part orientation and tape sizes, please refer to our Tape and Reel Packaging Specifications Brochure, BRD8011/D.

Share Feedback
Your Opinion Matters

REVISION HISTORY

Revision	Description of Changes	Date
2	Rebranded the Data Sheet to **onsemi** format.	5/21/2025

Share Feedback
Your Opinion Matters



SCALE 1:1

SOIC−8
CASE 751AZ
ISSUE B

DATE 18 MAY 2015

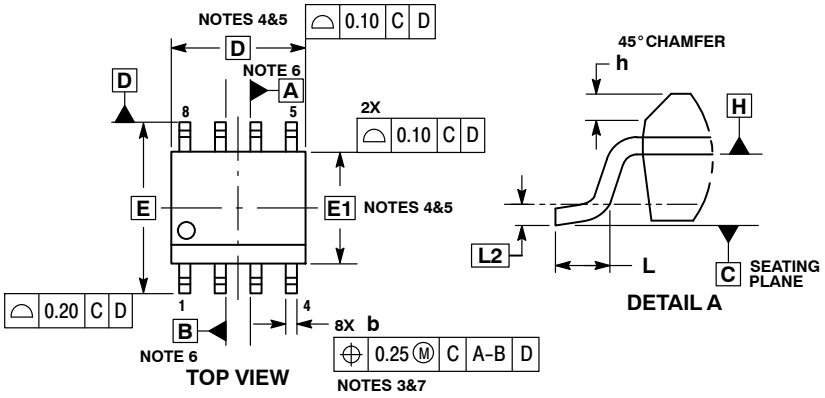

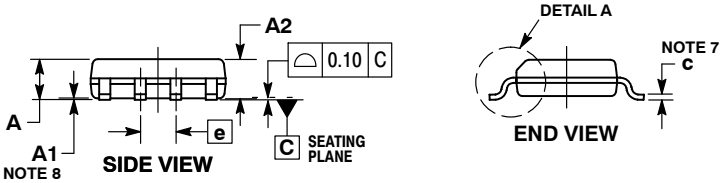

NOTES:
1. DIMENSIONING AND TOLERANCING PER ASME Y14.5M, 1994.
2. CONTROLLING DIMENSION: MILLIMETERS.
3. DIMENSION b DOES NOT INCLUDE DAMBAR PROTRUSION. ALLOWABLE PROTRUSION SHALL BE 0.004 mm IN EXCESS OF MAXIMUM MATERIAL CONDITION.
4. DIMENSION D DOES NOT INCLUDE MOLD FLASH, PROTRUSIONS OR GATE BURRS. MOLD FLASH, PROTRUSIONS OR GATE BURRS SHALL NOT EXCEED 0.006 mm PER SIDE. DIMENSION E1 DOES NOT INCLUDE INTERLEAD FLASH OR PROTRUSION. INTERLEAD FLASH OR PROTRUSION SHALL NOT EXCEED 0.010 mm PER SIDE.
5. THE PACKAGE TOP MAY BE SMALLER THAN THE PACKAGE BOTTOM. DIMENSIONS D AND E1 ARE DETERMINED AT THE OUTERMOST EXTREMES OF THE PLASTIC BODY AT DATUM H.
6. DIMENSIONS A AND B ARE TO BE DETERMINED AT DATUM H.
7. DIMENSIONS b AND c APPLY TO THE FLAT SECTION OF THE LEAD BETWEEN 0.10 TO 0.25 FROM THE LEAD TIP.
8. A1 IS DEFINED AS THE VERTICAL DISTANCE FROM THE SEATING PLANE TO THE LOWEST POINT ON THE PACKAGE BODY.

	MILLIMETERS	
DIM	MIN	MAX
A	---	1.75
A1	0.10	0.25
A2	1.25	---
b	0.31	0.51
c	0.10	0.25
D	4.90 BSC	
E	6.00 BSC	
E1	3.90 BSC	
e	1.27 BSC	
h	0.25	0.41
L	0.40	1.27
L2	0.25 BSC	

RECOMMENDED SOLDERING FOOTPRINT*

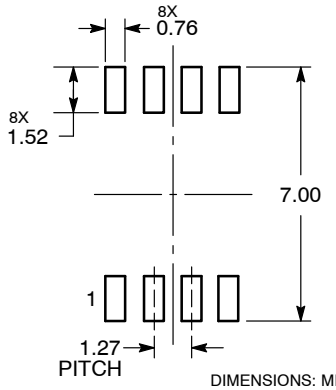

DIMENSIONS: MILLIMETERS

*For additional information on our Pb−Free strategy and soldering details, please download the **onsemi** Soldering and Mounting Techniques Reference Manual, SOLDERRM/D.

GENERIC MARKING DIAGRAM*

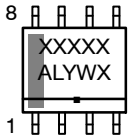

XXXXX = Specific Device Code
A = Assembly Location
L = Wafer Lot
Y = Year
W = Work Week
▪ = Pb−Free Package

*This information is generic. Please refer to device data sheet for actual part marking. Pb−Free indicator, “G” or microdot “▪”, may or may not be present. Some products may not follow the Generic Marking.

DOCUMENT NUMBER:	**98AON34918E**	Electronic versions are uncontrolled except when accessed directly from the Document Repository. Printed versions are uncontrolled except when stamped “CONTROLLED COPY” in red.
DESCRIPTION:	**SOIC−8**	**PAGE 1 OF 1**

onsemi and onsemi are trademarks of Semiconductor Components Industries, LLC dba **onsemi** or its subsidiaries in the United States and/or other countries. **onsemi** reserves the right to make changes without further notice to any products herein. **onsemi** makes no warranty, representation or guarantee regarding the suitability of its products for any particular purpose, nor does **onsemi** assume any liability arising out of the application or use of any product or circuit, and specifically disclaims any and all liability, including without limitation special, consequential or incidental damages. **onsemi** does not convey any license under its patent rights nor the rights of others.

© Semiconductor Components Industries, LLC, 2011

onsemi, , and other names, marks, and brands are registered and/or common law trademarks of Semiconductor Components Industries, LLC dba "**onsemi**" or its affiliates and/or subsidiaries in the United States and/or other countries. **onsemi** owns the rights to a number of patents, trademarks, copyrights, trade secrets, and other intellectual property. A listing of **onsemi**'s product/patent coverage may be accessed at www.onsemi.com/site/pdf/Patent−Marking.pdf. **onsemi** reserves the right to make changes at any time to any products or information herein, without notice. The information herein is provided "as−is" and **onsemi** makes no warranty, representation or guarantee regarding the accuracy of the information, product features, availability, functionality, or suitability of its products for any particular purpose, nor does **onsemi** assume any liability arising out of the application or use of any product or circuit, and specifically disclaims any and all liability, including without limitation special, consequential or incidental damages. Buyer is responsible for its products and applications using **onsemi** products, including compliance with all laws, regulations and safety requirements or standards, regardless of any support or applications information provided by **onsemi**. "Typical" parameters which may be provided in **onsemi** data sheets and/or specifications can and do vary in different applications and actual performance may vary over time. All operating parameters, including "Typicals" must be validated for each customer application by customer's technical experts. **onsemi** does not convey any license under any of its intellectual property rights nor the rights of others. **onsemi** products are not designed, intended, or authorized for use as a critical component in life support systems or any FDA Class 3 medical devices or medical devices with a same or similar classification in a foreign jurisdiction or any devices intended for implantation in the human body. Should Buyer purchase or use **onsemi** products for any such unintended or unauthorized application, Buyer shall indemnify and hold **onsemi** and its officers, employees, subsidiaries, affiliates, and distributors harmless against all claims, costs, damages, and expenses, and reasonable attorney fees arising out of, directly or indirectly, any claim of personal injury or death associated with such unintended or unauthorized use, even if such claim alleges that **onsemi** was negligent regarding the design or manufacture of the part. **onsemi** is an Equal Opportunity/Affirmative Action Employer. This literature is subject to all applicable copyright laws and is not for resale in any manner.

ADDITIONAL INFORMATION

TECHNICAL PUBLICATIONS:
Technical Library: www.onsemi.com/design/resources/technical−documentation
onsemi Website: www.onsemi.com

ONLINE SUPPORT: www.onsemi.com/support
For additional information, please contact your local Sales Representative at www.onsemi.com/support/sales