Compact SMART CARD Interface IC

NCN8025 / NCN8025A

The NCN8025 / NCN8025A is a compact and cost−effective single smart card interface IC. It is dedicated for 1.8 V / 3.0 V / 5.0 V smart card reader/writer applications. The card V_{CC} supply is provided by a built−in very low drop out and low noise LDO.

The device is fully compatible with the ISO 7816−3, EMV 4.3, UICC and related standards including NDS and other STB standards (Nagravision, Irdeto...). It satisfies the requirements specifying conditional access into Set−Top−Boxes (STB) or Conditional Access Modules (CAM and CAS).

This smart card interface IC is available in a QFN−24 package (NCN8025A) providing all of the industry−standard features usually required for STB smart card interface. It is also offered in a very compact package profile, QFN−16 (NCN8025), satisfying the requirements of cost−efficiency and space−saving requested by CAM and SIM applications.

For details regarding device implementation refer to application note AND8003/D, available upon request (please contact your local **onsemi** sales office or representative).

MARKING DIAGRAMS



QFN24
MN SUFFIX
CASE 485L



QFN16
MT SUFFIX
CASE 488AK

A = Assembly Location
L = Wafer Lot
Y = Year
W = Work Week
▪ = Pb−Free Package
(Note: Microdot may be in either location)

ORDERING INFORMATION

See detailed ordering and shipping information on page 13 of this data sheet.

Features

- Single IC Card Interface
- Fully Compatible with ISO 7816−3, EMV 4.3, UICC and Related Standards Including NDS and Other STB Standards (Nagravision, Irdeto...)
- 3 Bidirectional Buffered I/O Level Shifters (C4, C7 and C8) (QFN−24) − 1 Bidirectional I/O Level Shifter for the QFN−16 compact version
- 1.8 V, 3.0 V or 5.0 V ± 5 % Regulated Card Power Supply Generation such as ICC ≤ 70 mA
- Regulator Power Supply: V_{DDP} = 2.7 V to 5.5 V (@ 1.8 V),
  3.0 V to 5.5 V (@ 3.0 V) & 4.85 V to 5.5 V (@ 5.0 V)
- Independent Power Supply range on Controller Interface such as V_{DD} = 2.7 V to 5.5 V
- Handles Class A, B and C Smart Cards
- Short Circuit Protection on all Card Pins
- Support up to 27 MHz input Clock with Internal Division Ratio 1/1, 1/2, 1/4 and 1/8 through CLKDIV1 and CLKDIV2
- ESD Protection on Card Pins up to +8 kV (Human Body Model)
- Activation / Deactivation Sequences (ISO7816 Sequencer)
- Fault Protection Mechanisms Enabling Automatic Device Deactivation in Case of Overload, Overheating, Card Take−off or Power Supply Drop−out (OCP, OTP, UVP)
- Interrupt Signal $\overline{INT}$ for Card Presence and Faults
- External Under−Voltage Lockout Threshold Adjustment on VDD (PORADJ Pin) (Except QFN−16)
- Available in 2 Package Formats: QFN−24 (NCN8025A) and QFN−16 (NCN8025)
- These are Pb−Free Devices

Typical Application

- Pay TV, Set Top Box Decoder with Conditional Access and Pay−per−View
- Conditional Access Module (CAM / CAS)
- SIM card interface applications (UICC / USIM)
- Point Of Sales and Transaction Terminals
- Electronic Payment and Identification

© Semiconductor Components Industries, LLC, 2016

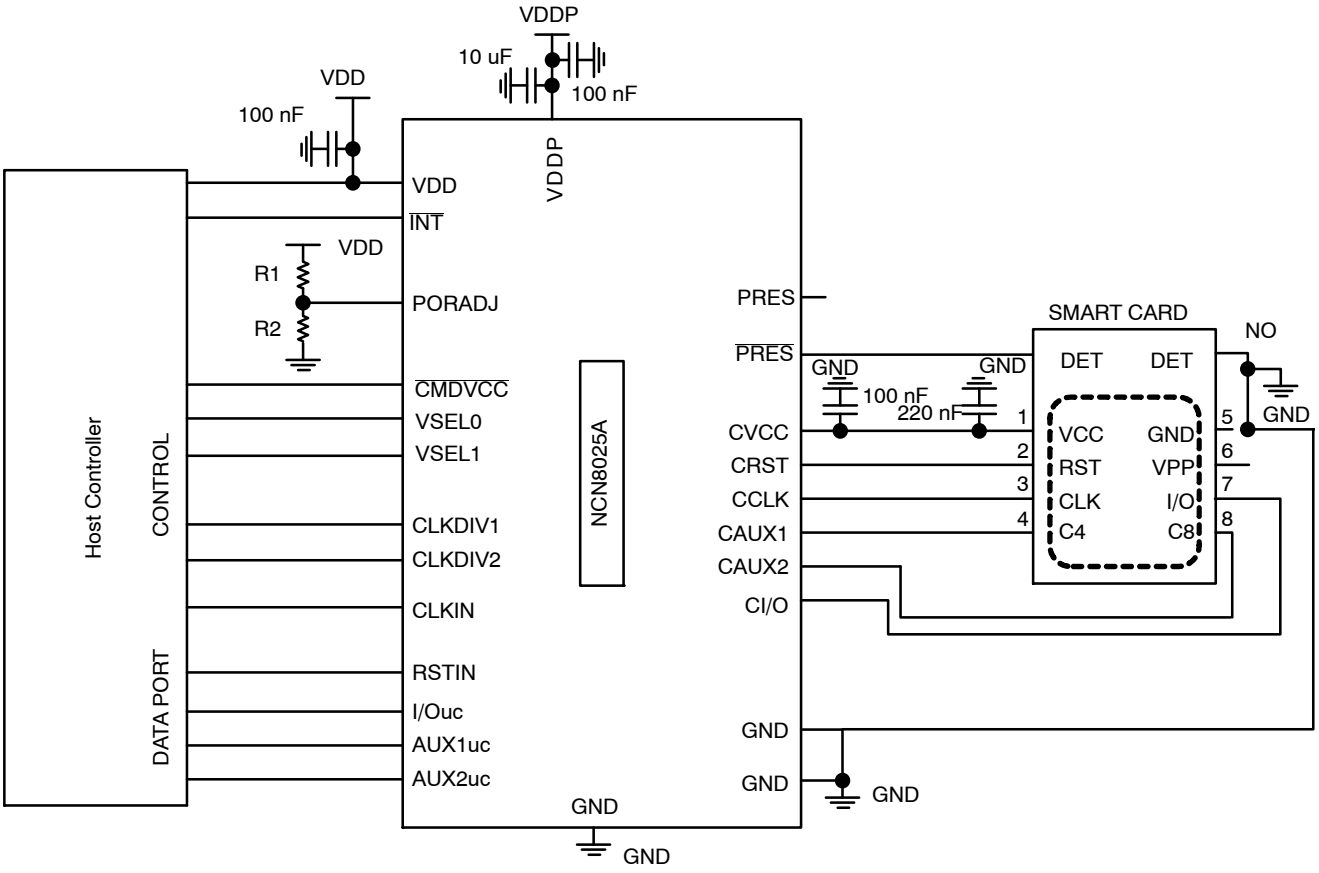

Figure 1. Typical Smart Card Interface Application

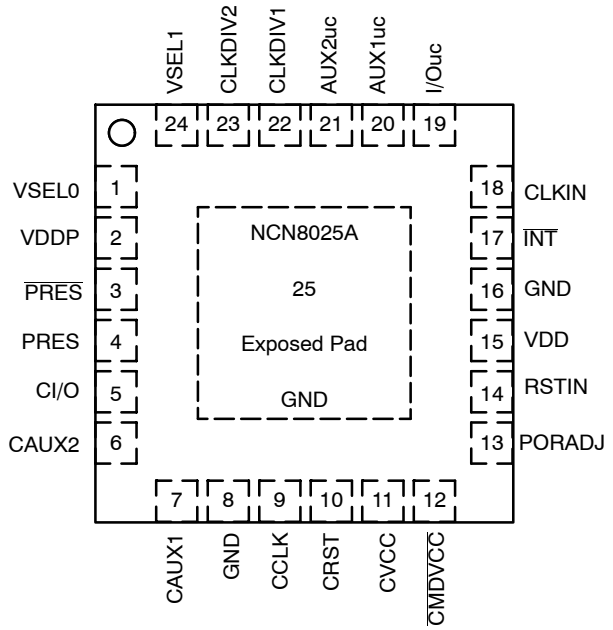

Figure 2. NCN8025A – QFN–24 Pinout
(Top View)

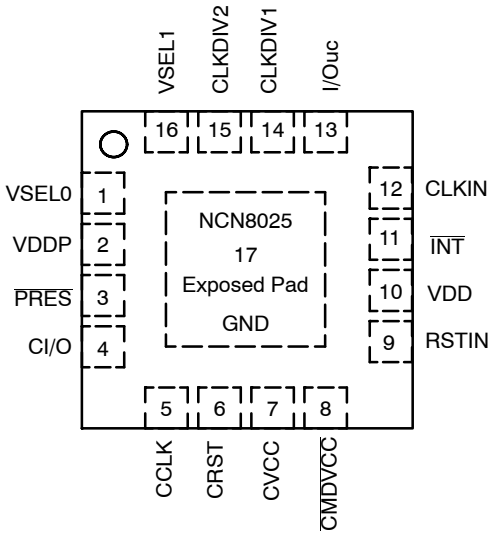

Figure 3. NCN8025 – QFN–16 Pinout
(Top View)

Share Feedback
Your Opinion Matters

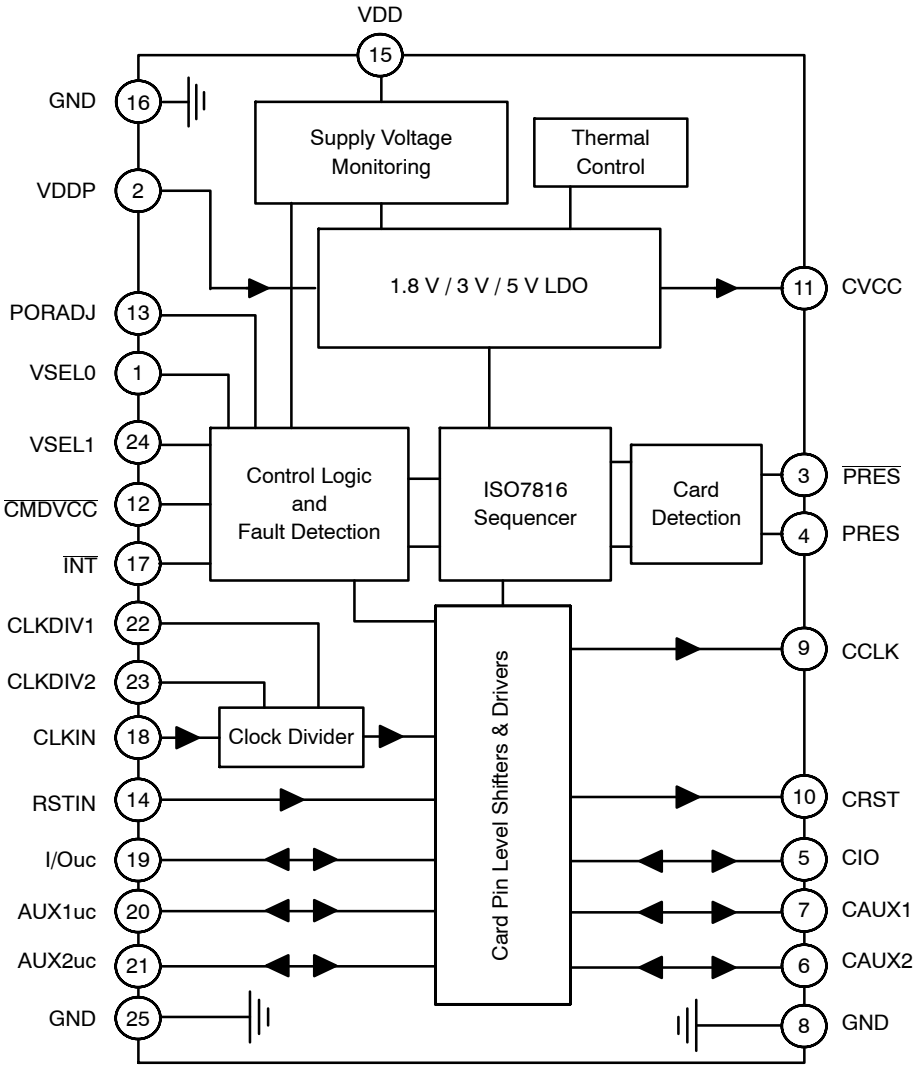

Figure 4. NCN8025A Block Diagram (QFN−24 Pin Numbering)

PIN FUNCTION AND DESCRIPTION

Pin (QFN24)	Pin (QFN16)	Name	Type	Description
1	1	VSEL0	Input	Allows selecting card V_{CC} power supply voltage mode (5V/$\overline{3V}$ or 1.8V/$\overline{3V}$) VSEL0 = Low; CVCC = 5 V when VSEL1 = High or 3 V when VSEL1 = Low VSEL0 = High; CVCC = 1.8 V when VSEL1 = High or 3 V when VSEL1 = Low
2	2	VDDP	Power	Regulator power supply.
3	3	$\overline{PRES}$	Input	Card presence pin active (card present) when $\overline{PRES}$ = Low. A built−in debounce timer of about 8 ms is activated when a card is inserted. Convenient for Normally Open (NO) Smart card connector.
4	–	PRES	Input	Card presence pin active (card present) when PRES = High. A built−in debounce timer of about 8 ms is activated when a card is inserted. Convenient for Normally Closed (NC) smart card connector.
5	4	CI/O	Input/ Output	This pin handles the connection to the serial I/O (C7) of the card connector. A bi−directional level translator adapts the serial I/O signal between the card and the micro controller. A 11 kΩ (typical) pull up resistor to CVCC provides a High impedance state for the smart card I/O link.

Share Feedback
Your Opinion Matters

PIN FUNCTION AND DESCRIPTION

Pin (QFN24)	Pin (QFN16)	Name	Type	Description
6	–	CAUX2	Input/ Output	This pin handles the connection to the chip card's serial auxiliary AUX2 I/O pin (C8). A bi−directional level translator adapts the serial I/O signal between the card and the micro controller. A 11 kΩ (typical) pull up resistor to CVCC provides a High impedance state for the smart card C8 pin.
7	–	CAUX1	Input/ Output	This pin handles the connection to the chip card's serial auxiliary AUX1 I/O pin (C4). A bi−directional level translator adapts the serial I/O signal between the card and the micro controller. A 11 kΩ (typical) pull up resistor to CVCC provides a High impedance state for the smart card C4 pin.
8	–	GND	Ground	Card Ground
9	5	CCLK	Output	This pin is connected to the CLOCK card connector's pin (Chip card's pin C3). The Clock signal comes from the CLKIN input through clock dividers and level shifter.
10	6	CRST	Output	This pin is connected to the chip card's RESET pin (C2) through the card connector. A level translator adapts the external Reset (RSTIN) signal to the smart card.
11	7	CVCC	Power Output	This pin is connected to the smart card power supply pin (C1). An internal low dropout regulator is programmable using the pins VSEL0 and VSEL1 to supply either 5 V or 3 V or 1.8 V output voltage. An external distributed ceramic capacitor ranging from 80 nF to 1.2 μF recommended must be connected across CVCC and CGND. This set of capacitor (if distributed) must be low ESR (< 100 mΩ).
12	8	$\overline{\text{CMDVCC}}$	Input	Command V_{CC} pin. Activation sequence Enable/Disable pin (active Low). The activation sequence is enabled by toggling $\overline{\text{CMDVCC}}$ High to Low and when a card is present.
13	–	PORADJ	Input	Power−on reset threshold adjustment input pin for changing the reset threshold (V_{DD} UVLO threshold) thanks to an external resistor power divider. Needs to be connected to ground when unused.
14	9	RSTIN	Input	This Reset input connected to the host and referred to VDD (microcontroller side), is connected to the smart card Reset pin through the internal level shifter which translates the level according to the CVCC programmed value.
15	10	VDD	Power input	This pin is connected to the system controller power supply. It configures the level shifter input stage to accept the signals coming from the controller. A 0.1 μF decoupling capacitor shall be used. When V_{DD} is below 2.30 V typical the card pins are disabled.
16	–	GND	Ground	Ground
17	11	$\overline{\text{INT}}$	Output	The interrupt request is activated LOW on this pin. This is enabled when a card is present and the card presence is detected by $\overline{\text{PRES}}$ or PRES pins. Similarly an interrupt is generated when CVCC is overloaded. Inverter output (An open−drain output configuration with 50 kΩ pull−up resistor is available under request (metal change)).
18	12	CLKIN	Input	Clock Input for External Clock
19	13	I/Ouc	Input / Output	This pin is connected to an external micro−controller. A bi−directional level translator adapts the serial I/O signal between the smart card and the external controller. A built−in constant 11 kΩ (typical) resistor provides a high impedance state.
20	–	AUX1uc	Input / Output	This pin is connected to an external micro−controller. A bi−directional level translator adapts the serial C4 signal between the smart card and the external controller. A built−in constant 11 kΩ (typical) resistor provides a high impedance state.
21	–	AUX2uc	Input / Output	This pin is connected to an external micro−controller. A bi−directional level translator adapts the serial C8 signal between the smart card and the external controller. A built−in constant 11 kΩ (typical) resistor provides a high impedance state.
22	14	CLKDIV1	Input	This pin coupled with CLKDIV2 is used to program the clock frequency division ratio (Table 2).
23	15	CLKDIV2	Input	This pin coupled with CLKDIV1 is used to program the clock frequency division ratio (Table 2).
24	16	VSEL1	Input	Allows selecting card V_{CC} power supply voltage. VSEL0 = Low: CVCC = 5 V when VSEL1 = High or 3 V when VSEL1 = Low. VSEL0 = High: CVCC = 1.8 V when VSEL1 = High or 3 V when VSEL1 = Low.
25	17	GND	Ground	Regulator Power Supply Ground

NOTE: All information below refers to QFN−24 pin numbering unless otherwise noted. This information can be transposed to the QFN−16 package according to the above "PIN FUNCTION AND DESCRIPTION" Table.

Share Feedback
Your Opinion Matters

ATTRIBUTES

Characteristics	Values
ESD protection Human Body Model (HBM) (Note 1) Card Pins (card interface pins 3−11) All Other Pins Machine Model (MM) Card Pins (card interface pins 3−11) All Other Pins	 8 kV 2 kV 400 V 150 V
Moisture sensitivity (Note 2) QFN−24 and QFN−16	Level 1
Flammability Rating Oxygen Index: 28 to 34	UL 94 V−0 @ 0.125 in
Meets or exceeds JEDEC Spec EIA/JESD78 IC Latch−up Test	

1. Human Body Model (HBM), R = 1500 Ω, C = 100 pF.
2. For additional information, see Application Note AND8003/D.

MAXIMUM RATINGS (Note 3)

Rating	Symbol	Value	Unit
Regulator Power Supply Voltage	V_{DDP}	$-0.3 \le V_{DDP} \le 5.5$	V
Power Supply from Microcontroller Side	V_{DD}	$-0.3 \le V_{DD} \le 5.5$	V
External Card Power Supply	CVCC	$-0.3 \le$ CVCC ≤ 5.5	V
Digital Input Pins	V_{in}	$-0.3 \le V_{in} \le V_{DD}$	V
Digital Output Pins (I/Ouc, AUX1uc, AUX2uc, $\overline{INT}$)	V_{out}	$-0.3 \le V_{out} \le V_{DD}$	V
Smart card Output Pins	V_{out}	$-0.3 \le V_{out} \le$ CVCC	V
Thermal Resistance Junction−to−Air (Note 4) QFN−24 QFN−16	$R_{\theta JA}$	37 48	°C/W
Operating Ambient Temperature Range	T_A	−40 to +85	°C
Operating Junction Temperature Range	T_J	−40 to +125	°C
Maximum Junction Temperature	T_{Jmax}	+125	°C
Storage Temperature Range	T_{stg}	−65 to + 150	°C

Stresses exceeding those listed in the Maximum Ratings table may damage the device. If any of these limits are exceeded, device functionality should not be assumed, damage may occur and reliability may be affected.

3. Maximum electrical ratings are defined as those values beyond which damage to the device may occur at T_A = +25°C.
4. Exposed Pad (GND) must be connected to PCB.

Share Feedback
Your Opinion Matters

POWER SUPPLY SECTION (V_{DD} = 3.3 V; V_{DDP} = 5 V; T_{amb} = 25°C; F_{CLKIN} = 10 MHz)

Symbol	Parameter	Min	Typ	Max	Unit
V_{DDP}	Regulator Power Supply, CVCC = 5.0 V, |ICC| ≤ 70 mA (EMV Conditions) |ICC| ≤ 70 mA (NDS Conditions) CVCC = 3.0 V, |ICC| ≤ 70 mA CVCC = 1.8 V, |ICC| ≤ 70 mA	 4.75 4.85 3.0 2.7	 5.0 5.0	 5.5 5.5 5.5 5.5	V
I_{DDP}	Inactive mode ($\overline{CMDVCC}$ = High)	–	–	1	μA
I_{DDP}	DC Operating supply current, F_{CLKIN} = 10 MHz, $Cout_{CCLK}$ = 33 pF, $\|I_{CVCC}\|$ = 0 ($\overline{CMDVCC}$ = Low)	–	–	3.0	mA
I_{DDP}	DC Operating supply current, CVCC = 5 V, I_{CVCC} = 70 mA CVCC = 3 V, I_{CVCC} = 70 mA CVCC = 1.8 V, I_{CVCC} = 70 mA	 – – –	 – – –	 150 150 150	mA
V_{DD}	Operating Voltage	2.7	–	5.5	V
I_{VDD}	Inactive mode – standby current ($\overline{CMDVCC}$ = High)	–	–	60	μA
I_{VDD}	Operating Current – F_{CLK_IN} = 10 MHz , $Cout_{CCLK}$ = 33 pF $\|I_{CVCC}\|$ = 0 ($\overline{CMDVCC}$ = Low)	–	–	1	mA
$UVLOV_{DD}$	Under Voltage Lock–Out (UVLO), no external resistor at pin PORADJ (connected to GND), falling V_{DD} level	2.20	2.30	2.40	V
UVLOHys	UVLO Hysteresis, no external resistor at pin PORADJ (Connected to GND)	50	100	180	mV
PORADJ pin					
V_{PORth+}	External Rising threshold voltage on V_{DD} for Power On Reset – pin PORADJ	1.20	1.27	1.34	V
V_{PORth-}	External Falling threshold voltage on V_{DD} for Power On Reset – pin PORADJ	1.15	1.20	1.28	V
V_{PORHys}	Hysteresis on V_{PORth} (pin PORADJ)	30	80	100	mV
t_{POR}	Width of Power–On Reset pulse (Note 5) No external resistor on PORADJ External resistor on PORADJ	 4 4	 8 8	 12 12	 ms ms
I_{IL}	Low level input leakage current, V_{IL} < 0.5 V (Pull–down source current)		5		μA
Low Dropout Regulator					
C_{CVCC}	Output Capacitance on card power supply CVCC (Note 6)	0.08	0.32	1.2	μF
CVCC	Output Card Supply Voltage (including ripple) 1.8 V CVCC mode @ ICC ≤ 70 mA 3.0 V CVCC mode @ ICC ≤ 70 mA 5.0 V CVCC mode @ ICC ≤ 70 mA with 4.85 V ≤ VDDP ≤ 5.5 V (NDS) 5.0 V CVCC mode @ ICC ≤ 70 mA with 4.75 V ≤ VDDP ≤ 5.5 V (EMV)	 1.70 2.85 4.75 4.60	 1.80 3.00 5.00 5.00	 1.90 3.15 5.25 5.25	 V V V
CVCC	Current pulses 15 nAs (t < 400 ns & $\|I_{CC}\|$ < 100 mA peak) (Note 5) 1.8 V mode / Ripple ≤ 250 mV (2.7 V ≤ V_{DDP} ≤ 5.5 V) Current pulses 40 nAs (t < 400 ns & $\|I_{CC}\|$ < 200 mA peak) 3.0 V mode / Ripple ≤ 250 mV (2.9 V ≤ V_{DDP} ≤ 5.5 V) Current pulses 40 nAs (t < 400 ns & $\|I_{CC}\|$ < 200 mA peak) 5.0 V mode / Ripple ≤ 250 mV (4.85 V ≤ V_{DDP} ≤ 5.5 V)	 1.66 2.70 4.60	 1.80 3.00 5.00	 1.90 3.30 5.30	 V V V
I_{CVCC}	Card Supply Current @ CVCC = 1.8 V @ CVCC = 3.0 V @ CVCC = 5.0 V			 70 70 70	mA
I_{CVCC_SC}	Short –Circuit Current – CVCC shorted to ground		120	150	mA
ΔV_{CVCC}	Output Card Supply Voltage Ripple peak–to–peak – f_{ripple} = 100 Hz to 200 MHz (load transient frequency with 65 mA peak current and 50% Duty Cycle) (Note 5)			300	mV
$CVCC_{SR}$	Slew Rate on CVCC turn–on / turn–off (Note 5)			0.22	V/μs

5. Guaranteed by design and characterization.
6. These values take into account the tolerance of the cms capacitor used. CMS capacitor very low ESR (< 100 mΩ, X5R / X7R).

Share Feedback
Your Opinion Matters

HOST INTERFACE SECTION CLKIN, RSTIN, I/Ouc, AUX1uc, AUX2uc, CLKDIV1, CLKDIV2, $\overline{\text{CMDVCC}}$, VSEL0, VSEL1 (V_{DD} = 3.3 V; V_{DDP} = 5 V; T_{amb} = 25°C; F_{CLKIN} = 10 MHz)

Symbol	Parameter	Min	Typ	Max	Unit
F_{CLKIN}	Clock frequency on pin CLKIN (Note 7)	–	–	27	MHz
V_{IL}	Input Voltage level Low: CLKIN, RSTIN, CLKDIV1, CLKDIV2, $\overline{\text{CMDVCC}}$, VSEL0, VSEL1	−0.3	–	0.3 x V_{DD}	V
V_{IH}	Input Voltage level High: CLKIN, RSTIN, CLKDIV1, CLKDIV2, $\overline{\text{CMDVCC}}$, VSEL0, VSEL1	0.7 x V_{DD}	–	V_{DD} + 0.3	V
$\|I_{IL}\|$	CLKDIV1, CLKDIV2, $\overline{\text{CMDVCC}}$, RSTIN, CLKIN, VSEL0, VSEL1 Low Level Input Leakage Current, V_{IL} = 0 V	–	–	1	μA
$\|I_{IH}\|$	CLKDIV1, CLKDIV2, $\overline{\text{CMDVCC}}$, RSTIN, CLKIN, VSEL0, VSEL1 Low Level Input Leakage Current, V_{IH} = V_{DD}	–	–	1	μA
V_{IL}	Input Voltage level Low: I/Ouc, AUX1uc, AUX2uc	−0.3		0.5	V
V_{IH}	Input Voltage level High: I/Ouc, AUX1uc, AUX2uc	0.7 x V_{DD}		V_{DD} + 0.3	V
$\|I_{IL}\|$	I/Ouc, AUX1uc, AUX2uc Low level input leakage current, V_{IL} = 0 V	–	–	600	μA
$\|I_{IH}\|$	I/Ouc, AUX1uc, AUX2uc High level input leakage current, V_{IH} = V_{DD}	–	–	10	μA
V_{OH}	I/Ouc, AUX1uc, AUX2uc data channels, @ Cs ≤ 30 pF High Level Output Voltage (CRD_I/O = CAUX1 = CAUX2 = CVCC) I_{OH} = −40 μA for V_{DD} > 2 V (I_{OH} = −20 μA for V_{DD} ≤ 2 V)	0.75 x V_{DD}	–	V_{DD} + 0.1	V
V_{OL}	Low Level Output Voltage (CRD_I/O = CAUX1 = CAUX2 = 0 V) I_{OL}= + 1 mA	0	–	0.3	V
$t_{Ri/Fi}$	Input Rising/Falling times (Note 7)	–	–	1.2	μs
$t_{Ro/Fo}$	Output Rising/Falling times (Note 7)	–	–	0.1	μs
R_{pu}	I/0uc, AUX1uc, AUX2uc Pull Up Resistor	8	11	16	kΩ
V_{OH}	Output High Voltage $\overline{\text{INT}}$ @ I_{OH} = −15 μA (source)	0.75 x V_{DD}	–	–	V
V_{OL}	Output Low Voltage $\overline{\text{INT}}$ @ I_{OL} = 2 mA (sink)	0	–	0.30	V
R_{INT}	*$\overline{\text{INT}}$ Pull Up Resistor (open−drain output configuration option) (Note 8)*	*40*	*50*	*60*	*kΩ*

7. Guaranteed by design and characterization.
8. Option available under request (metal change). The current option is an inverter−like output.

Share Feedback
Your Opinion Matters

SMART CARD INTERFACE SECTION CI/O, CAUX1, CAUX2, CCLK, CRST, PRES, $\overline{PRES}$ (V_{DD} = 3.3 V; V_{DDP} = 5 V; T_{amb} = 25°C; F_{CLKIN} = 10 MHz)

Symbol	Parameter	Min	Typ	Max	Unit
	CRST @ CVCC = 1.8 V, 3.0 V, 5.0 V				
V_{OH}	Output RESET V_{OH} @ I_{rst} = −200 μA	0.9 x CVCC	–	CVCC	V
V_{OL}	Output RESET V_{OL} @ I_{rst} = 200 μA	0	–	0.20	V
t_R	Output RESET Rise time @ C_{out} = 100 pF (Note 9)	–	–	100	ns
t_F	Output RESET Fall time @ C_{out} = 100 pF (Note 9)	–	–	100	ns
$t_{R/F}$	Output Rise/Fall times @ CVCC = 1.8 V & C_{out} = 100 pF (Note 9)	–	–	200	ns
td	RSTIN to CRST delay − Reset enabled (Note 9)	–	–	2	μs
	CCLK @ CVCC = 1.8 V, 3.0 V or 5.0 V				
F_{CRDCLK}	Output Frequency (Note 9)	–	–	27	MHz
V_{OH}	Output CCLK V_{OH} @ I_{clk} = −200 μA	0.9 x CVCC	–	CVCC	V
V_{OL}	Output CCLK V_{OL} @ I_{clk} = 200 μA	0	–	+0.2	V
F_{DC}	Output Duty Cycle (Note 9)	45	–	55	%
	Rise & Fall time				
t_{rills}	Output CCLK Rise time @ C_{out} = 33 pF (Note 9)	–	–	16	ns
t_{ulsa}	Output CCLK Fall time @ C_{out} = 33 pF (Note 9)	–	–	16	ns
SR	Slew Rate @ C_{out} = 33 pF (CVCC = 3.0 V or 5.0 V) (Note 9)	0.2	–	–	V/ns
	CAUX1, CAUX2, CI/O @ CVCC = 1.8 V, 3.0 V, 5.0 V				
V_{IH}	Input Voltage High Level				
	1.8 V Mode	1.0	–	CVCC + 0.3	V
	3.0 V Mode	1.6	–	CVCC + 0.3	V
	5.0 V Mode	2.3	–	CVCC + 0.3	V
V_{IL}	Input Voltage Low Level				
	1.8 V mode	−0.30	–	0.50	V
	3.0 V mode	−0.30	–	0.80	V
	5.0 V mode	−0.30	–	1.00	V
$\|I_{IL}\|$	Low Level Input current V_{IL} = 0 V	–		600	μA
$\|I_{IH}\|$	High Level Input current V_{IH} = CVCC	–		10	μA
V_{OH}	Output V_{OH}				
	@ I_{OH} = −40 μA for CVCC = 3.0 V and 5.0 V	0.8 x CVCC	–	CVCC + 0.1	V
	@ I_{OH} = −20 μA for CVCC = 1.8 V	0.8 x CVCC	–	CVCC + 0.1	V
V_{OL}	Output V_{OL}				
	@ I_{OL} = 1 mA, V_{IL} = 0 V for CVCC = 1.8 V	0	–	0.27	V
	@ I_{OL} = 1 mA, V_{IL} = 0 V for CVCC = 3.0 V and 5.0 V	0	–	0.30	V
$t_{Ri\ /\ Fi}$	Input Rising/Falling times (Note 9)	–	–	1.2	μs
$t_{Ro\ /\ Fo}$	Output Rising/Falling times / C_{out} = 80 pF (Note 9)	–	–	0.1	μs
F_{bidi}	Maximum data rate through bidirectional I/O, AUX1 & AUX2 channels (Note 9)	–	–	1	MHz
R_{PU}	CAUX1, CAUX2, CI/O Pull− Up Resistor	8	11	16	kΩ
t_{IO}	Propagation delay IOuc −> CI/O and CI/O −> IOuc (falling edge) (Note 9)	–	–	200	ns
tpu	Active pull−up pulse width buffers I/O, AUX1 and AUX2 (Note 9)	–	–	200	ns
C_{in}	Input Capacitance on data channels	–	–	10	pF
	PRES, $\overline{PRES}$				V
V_{IH}	Card Presence Voltage High Level	0.7 x V_{DD}	–	V_{DD} + 0.3	
V_{IL}	Card Presence Voltage Low Level	−0.3	–	0.3 x V_{DD}	

Share Feedback
Your Opinion Matters

SMART CARD INTERFACE SECTION CI/O, CAUX1, CAUX2, CCLK, CRST, PRES, $\overline{PRES}$ (V_{DD} = 3.3 V; V_{DDP} = 5 V; T_{amb} = 25°C; F_{CLKIN} = 10 MHz)

Symbol	Parameter	Min	Typ	Max	Unit
	PRES, $\overline{PRES}$				µA
	High level input leakage current, $V_{IH} = V_{DD}$				
$\lvert I_{IH} \rvert$	PRES		5	10	
	$\overline{PRES}$			1	
	Low level input leakage current, V_{IL} = 0 V				
$\lvert I_{IL} \rvert$	PRES			1	
	$\overline{PRES}$		5	10	
$T_{debounce}$	Debounce time PRES and $\overline{PRES}$ (Note 9)	5	8	12	ms
$I_{CI/O}$	CI/O, CAUX1, CAUX2 current limitation	–	–	15	mA
I_{CCLK}	CCLK current limitation	–	–	70	mA
I_{CRST}	CRST current limitation	–	–	20	mA
T_{act}	Activation Time (Note 9)	30	–	100	µs
T_{deact}	Deactivation Time (Note 9)	30	–	250	µs
$Temp_{SD}$	Shutdown temperature (Note 9)	–	150	–	°C

9. Guaranteed by design and characterization.

POWER SUPPLY

The NCN8025 / NCN8025A smart card interface has two power supplies: V_{DD} and V_{DDP}.

V_{DD} is common to the system controller and the interface. The applied V_{DD} range can go from 2.7 V up to 5.5 V. If V_{DD} goes below 2.30 V typical ($UVLO_{VDD}$) a power−down sequence is automatically performed. In that case the interrupt ($\overline{INT}$) pin is set Low.

A Low Drop−Out (LDO) and low noise regulator is used to provide the 1.8 V, 3 V or 5 V power supply voltage (CVCC) to the card. V_{DDP} is the LDO's input voltage. CVCC is the LDO output. The typical distributed reservoir output capacitor connected to CVCC is 100 nF + 220 nF. The capacitor of 100 nF is connected as close as possible to the CVCC's pin and the 220 nF one as close as possible to the card connector C1 pin. Both feature very low ESR values (lower than 50 mΩ). The decoupling capacitors on V_{DD} and V_{DDP} respectively 100 nF and 10 µF + 100 nF have also to be connected close to the respective IC pins.

The CVCC pin can source up to 70 mA at 1.8 V, 3 V and 5 V continuously over the V_{DDP} range (see corresponding specification table), the absolute maximum current being internally limited below 150 mA (Typical at 120 mA).

The card V_{CC} voltage (CVCC) can be programmed with the pins VSEL0 and VSEL1 and according to the below table:

Table 1. CVCC PROGRAMMING

VSEL0	VSEL1	CVCC
0	0	3.0 V
0	1	5.0 V
1	0	3.0 V
1	1	1.8 V

VSEL0 can be used to select the CVCC programming mode which can be 5V/$\overline{3V}$ (VSEL0 connected to Ground) or 1.8V/$\overline{3V}$ (VSEL0 connected to V_{DD}). VSEL0 and VSEL1 are usually programmed before activating the smart card interface that is when /CMDVCC is High.

There's no specific sequence for applying V_{DD} or V_{DDP}. They can be applied to the interface in any sequence. After powering the device $\overline{INT}$ pin remains Low until a card is inserted.

SUPPLY VOLTAGE MONITORING

The supply voltage monitoring block includes the Power−On Reset (POR) circuitry and the under−voltage lockout (UVLO) detection (V_{DD} voltage dropout detection). PORADJ pin allows the user, according to the considered application, to adjust the V_{DD} UVLO threshold. If not used PORADJ pin is connected to Ground (recommended even if it may be left unconnected).

The input supply voltage is continuously monitored to prevent under voltage operation. At power up, the system initializes the internal logic during POR timing and no further signal can be provided or supported during this period.

The system is ready to operate when the input voltage has reached the minimum V_{DD}. Considering this, the NCN8025 / NCN8025A will detect an Under−Voltage situation when the input supply voltage will drop below 2.30 V typical. When V_{DD} goes down below the UVLO falling threshold a deactivation sequence is performed.

The device is inactive during power−on and power−off of the V_{DD} supply (8 ms reset pulse).

PORADJ pin is used to modify the UVLO threshold according to the below relationship considering an external resistor divider R1 / R2 (see block diagram Figure 1):

$$UVLO = \frac{R1 + R2}{R2} V_{POR} \qquad \text{(eq. 1)}$$

If PORADJ is connected to Ground the V_{DD} UVLO threshold (V_{DD} falling) is typically 2.30 V. In some cases it

Share Feedback
Your Opinion Matters

can be interesting to adjust this threshold at a higher value and by the way increase the V_{DD} supply dropout detection level which enables a deactivation sequence if the V_{DD} voltage is too low.

For example, there are microcontrollers for which the minimum supply voltage insuring a correct operating is higher than 2.6 V; increasing $UVLO_{VDD}$ (V_{DD} falling) is consequently necessary. Considering for instance a resistor bridge with R1 = 56 kΩ, R2 = 42 kΩ and V_{POR-} = 1.27 V typical the V_{DD} dropout detection level can be increased up to:

$$UVLO = \frac{56k + 42k}{42k} V_{POR-} = 2.96\ V \qquad \text{(eq. 2)}$$

CLOCK DIVIDER:

The input clock can be divided by 1/1, 1/2, 1/4, or 1/8, depending upon the specific application, prior to be applied to the smart card driver. These division ratios are programmed using pins CLKDIV1 and CLKDIV2 (see Table 2). The input clock is provided externally to pin CLKIN.

Table 2. CLOCK FREQUENCY PROGRAMMING

CLKDIV1	CLKDIV2	F_{CCLK}
0	0	CLKIN / 8
0	1	CKLKIN / 4
1	0	CLKIN
1	1	CLKIN / 2

The clock input stage (CLKIN) can handle a 27 MHz maximum frequency signal. Of course, the ratio must be defined by the user to cope with Smart Card considered in a given application

In order to avoid any duty cycle out of the 45% / 55% range specification, the divider is synchronized by the last flip flop, thus yielding a constant 50% duty cycle, whatever be the divider ratio 1/2, 1/4 or 1/8. On the other hand, the output signal Duty Cycle cannot be guaranteed 50% if the division ratio is 1 and if the input Duty Cycle signal is not within the 46% − 56% range at the CLKIN input.

When the signal applied to CLKIN is coming from the external controller, the clock will be applied to the card under the control of the microcontroller or similar device after the activation sequence has been completed.

DATA I/O, AUX1 and AUX2 LEVEL SHIFTERS

The three bidirectional level shifters I/O, AUX1 and AUX2 adapt the voltage difference that might exist between the micro−controller and the smart card. These three channels are identical. The first side of the bidirectional level shifter dropping Low (falling edge) becomes the driver side until the level shifter enters again in the idle state pulling High CI/O and I/Ouc.

Passive 11 kΩ pull−up resistors have been internally integrated on each terminal of the bidirectional channel. In addition with these pull−up resistors, an active pull−up circuit provides a fast charge of the stray capacitance.

The current to and from the card I/O lines is limited internally to 15 mA and the maximum guaranteed frequency on these lines is 1 MHz.

STANDBY MODE

After a Power−on reset, the circuit enters the standby mode. A minimum number of circuits are active while waiting for the microcontroller to start a session:

- All card contacts are inactive
- Pins I/Ouc, AUX1uc and AUX2uc are in the high−impedance state (11 kΩ pull−up resistor to V_{DD})
- Card pins are inactive and pulled Low
- Supply Voltage monitoring is active

POWER−UP

In the standby mode the microcontroller can check the presence of a card using the signals $\overline{INT}$ and $\overline{CMDVCC}$ as shown in Table 3:

Table 3. CARD PRESENCE STATE

$\overline{INT}$	$\overline{CMDVCC}$	State
HIGH	HIGH	Card present
LOW	HIGH	Card not present

If a card is detected present ($\overline{PRES}$ or PRES active) the controller can start a card session by pulling $\overline{CMDVCC}$ Low. Card activation is run (t0, Figure 6). This Power−Up Sequence makes sure all the card related signals are LOW during the CVCC positive going slope. These lines are validated when CVCC is stable and above the minimum voltage specified. When the CVCC voltage reaches the programmed value (1.8 V, 3.0 V or 5.0 V), the circuit activates the card signals according to the following sequence (Figure 6):

- CVCC is powered−up at its nominal value (t1)
- I/O, AUX1 and AUX2 lines are activated (t2)
- Then Clock is activated and the clock signal is applied to the card (typically 500 ns after I/Os lines) (t3)
- Finally the Reset level shifter is enabled (typically 500 ns after clock channel) (t4)

The clock can also be applied to the card using a **RSTIN mode** allowing controlling the clock starting by setting RSTIN Low (Figure 5). Before running the activation sequence, that is before setting Low $\overline{CMDVCC}$ RSTIN is set High. The following sequence is applied:

- The Smart Card Interface is enable by setting $\overline{CMDVCC}$ LOW (RSTIN is High).
- Between t2 (Figure 5) and t5 = 200 μs, RSTIN is reset to LOW and CCLK will start precisely at this moment allowing a precise count of clock cycles before toggling CRST Low to High for ATR (Answer To Reset) request.

Share Feedback
Your Opinion Matters

– CRST remains LOW until 200 μs; after t5 = 200 μs CRST is enabled and is the copy of RSTIN which has no more control on the clock.

If controlling the clock with RSTIN is not necessary (**Normal Mode**), then $\overline{\text{CMDVCC}}$ can be set LOW with RSTIN LOW. In that case, CLK will start minimum 500 ns after the transition on I/O (Figure 6), and to obtain an ATR, CRST can be set High by RSTIN also about 500 ns after the clock channel activation (T_{act}).

The internal activation sequence activates the different channels according to a specific hardware built−in sequencing internally defined but at the end the actual activation sequencing is the responsibility of the application software and can be redefined by the micro−controller to comply with the different standards and the different ways the standards manage this activation (for example light differences exist between the EMV and the ISO7816 standards).

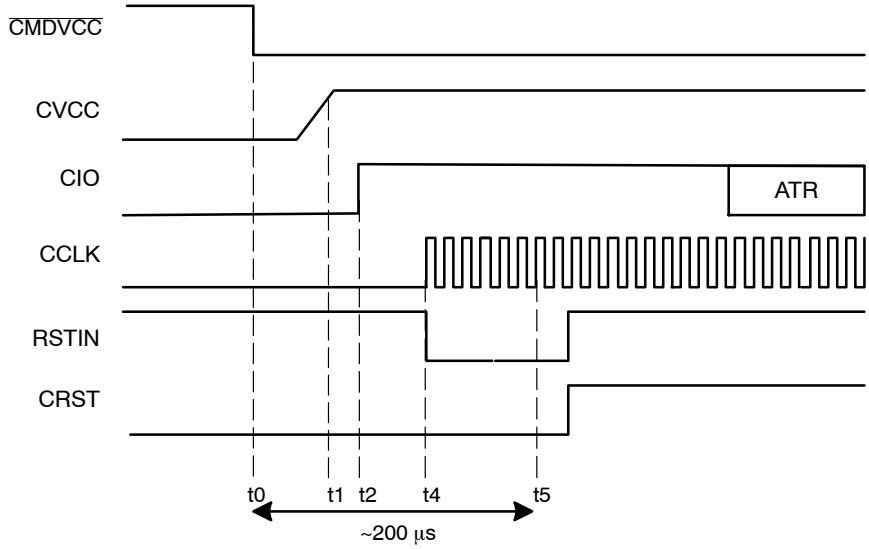

Figure 5. Activation Sequence – RSTIN Mode (RSTIN Starting High)

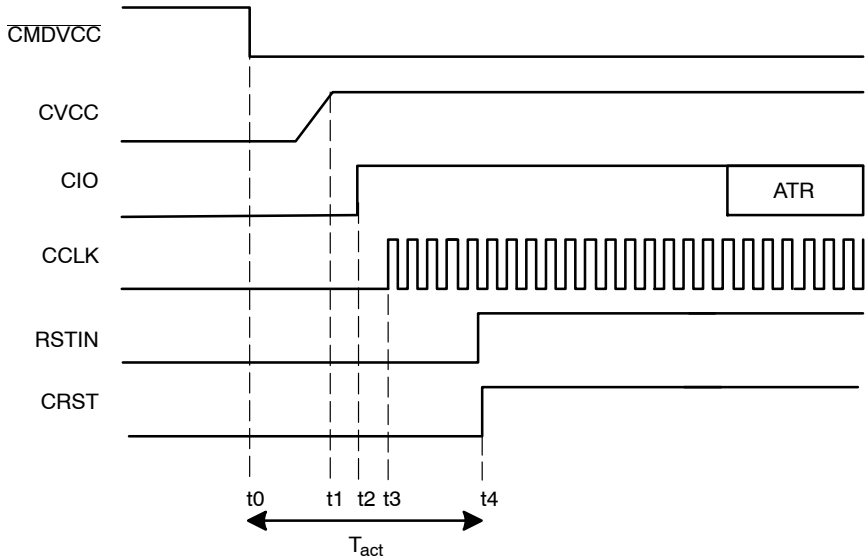

Figure 6. Activation Sequence – Normal Mode

Share Feedback
Your Opinion Matters

POWER−DOWN

When the communication session is completed the NCN8025 / NCN8025A runs a deactivation sequence by setting High $\overline{\text{CMDVCC}}$. The below power down sequence is executed:

- CRST is forced to Low
- CCLK is set Low 12 μs after CRST.
- CI/O, CAUX1 and CAUX2 are pulled Low
- Finally CVCC supply can be shut−off.

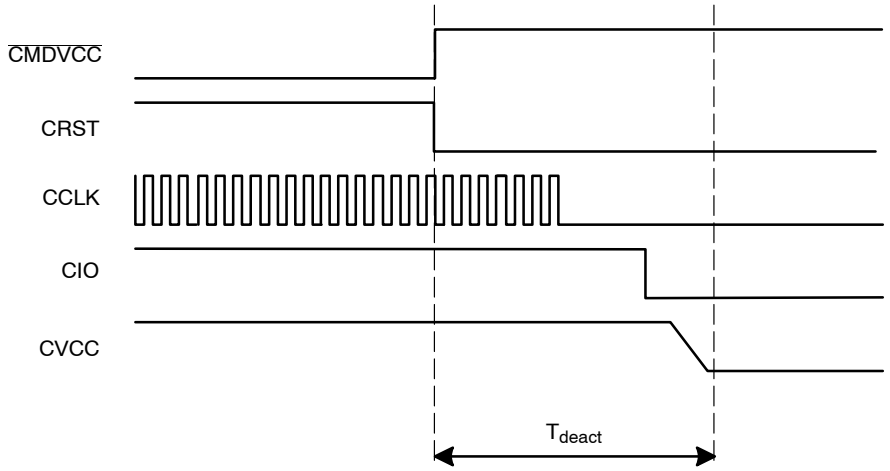

Figure 7. Deactivation Sequence

FAULT DETECTION

In order to protect both the interface and the external smart card, the NCN8025 / NCN8025A provides security features to prevent failures or damages as depicted here after.

- Card extraction detection
- V_{DD} under voltage detection
- Short−circuit or overload on CVCC
- DC/DC operation: the internal circuit continuously senses the CVCC voltage (in the case of either over or under voltage situation).
- DC/DC operation: under−voltage detection on V_{DDP}
- Overheating
- Card pin current limitation: in the case of a short circuit to ground. No feedback is provided to the external MPU.

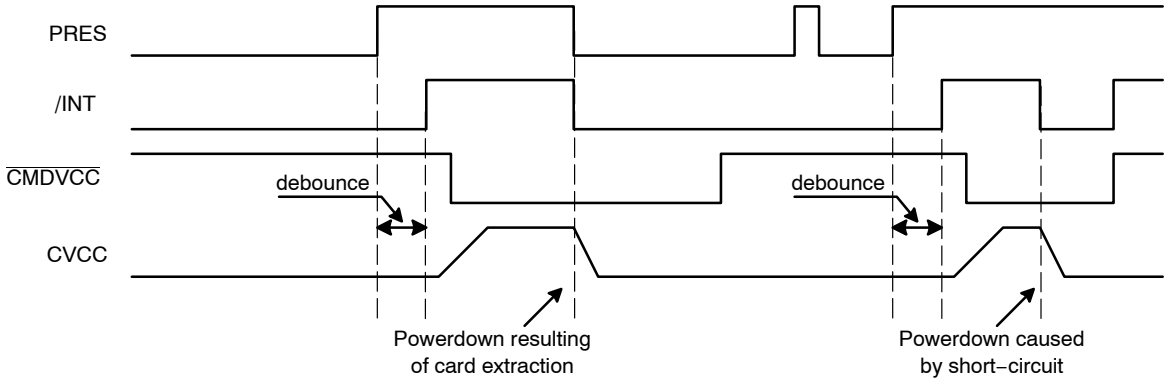

Figure 8. Fault Detection and Interrupt Management

Interrupt Pin Management:

A card session is opened by toggling $\overline{\text{CMDVCC}}$ High to Low.

Before a card session, $\overline{\text{CMDVCC}}$ is supposed to be in a High position. $\overline{\text{INT}}$ is Low if no card is present in the card connector (Normally open or normally closed type). $\overline{\text{INT}}$ is High if a card is present. If a card is inserted ($\overline{\text{INT}}$ = High) and if V_{DD} drops below the UVLO threshold then $\overline{\text{INT}}$ pin drops Low immediately. It switches High when V_{DD} increases again over the UVLO limit (including hysteresis), a card being still present.

During a card session, $\overline{\text{CMDVCC}}$ is Low and $\overline{\text{INT}}$ pin goes Low when a fault is detected. In that case a deactivation is immediately and automatically performed (see Figure 7). When the microcontroller resets $\overline{\text{CMDVCC}}$ to High it can sense the $\overline{\text{INT}}$ level again after having got completed the deactivation.

Share Feedback
Your Opinion Matters

As illustrated by Figure 8 the device has a debounce timer of 8 ms typical duration. When a card is inserted, output $\overline{INT}$ goes High only at the end of the debounce time. When the card is removed a deactivation sequence is automatically and immediately performed and $\overline{INT}$ goes Low.

ESD PROTECTION

The NCN8025 / NCN8025A includes devices to protect the pins against the ESD spike voltages. To cope with the different ESD voltages developed across these pins, the built in structures have been designed to handle either 2 kV, when related to the micro controller side, or 8 kV when connected with the external contacts (HBM model). Practically, the CRST, CCLK, CI/O, CAUX1, CAUX2, PRES and $\overline{PRES}$ pins can sustain 8 kV. The CVCC pin has the same ESD protection and can source up to 70 mA continuously, the absolute maximum current being internally limited with a max at 150 mA. The CVCC current limit depends on V_{DDP} and CVCC.

APPLICATION SCHEMATIC

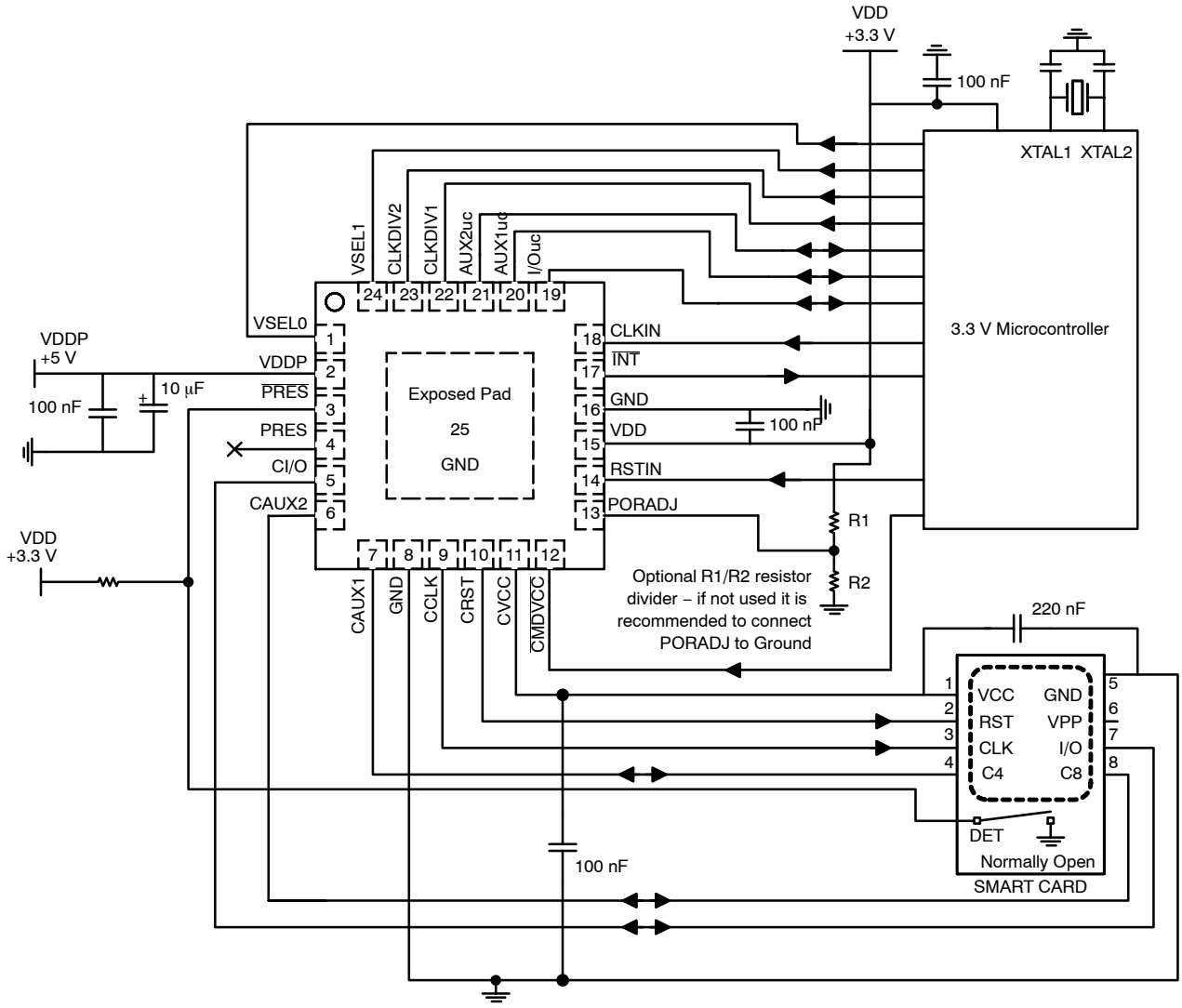

Figure 9. Application Schematic

ORDERING INFORMATION

Device	Package	Shipping†
NCN8025AMNTXG	QFN24 (Pb−Free)	3000 / Tape & Reel
NCN8025MTTBG	QFN16 (Pb−Free)	3000 / Tape & Reel

†For information on tape and reel specifications, including part orientation and tape sizes, please refer to our Tape and Reel Packaging Specifications Brochure, BRD8011/D.

Share Feedback
Your Opinion Matters

QFN24, 4x4, 0.5P
CASE 485L
ISSUE B

DATE 05 JUN 2012

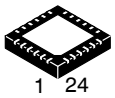

SCALE 2:1

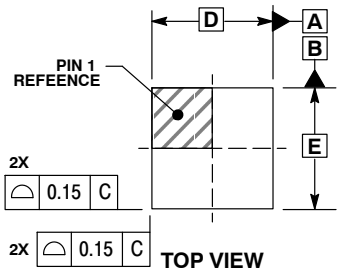

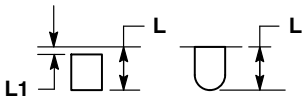

DETAIL A
ALTERNATE CONSTRUCTIONS

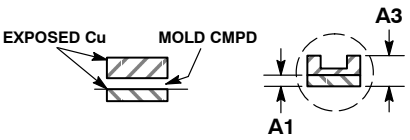

DETAIL B
ALTERNATE TERMINAL CONSTRUCTIONS

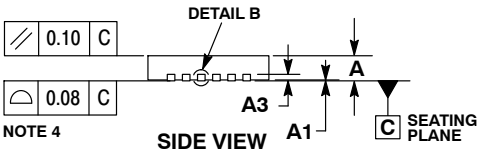

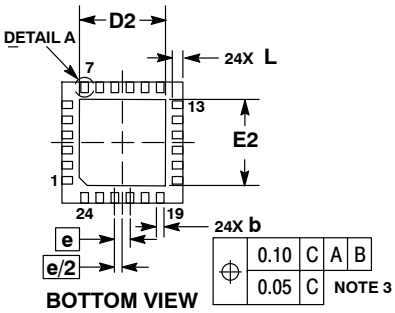

NOTES:
1. DIMENSIONING AND TOLERANCING PER ASME Y14.5M, 1994.
2. CONTROLLING DIMENSION: MILLIMETERS.
3. DIMENSION b APPLIES TO PLATED TERMINAL AND IS MEASURED BETWEEN 0.25 AND 0.30 MM FROM THE TERMINAL TIP.
4. COPLANARITY APPLIES TO THE EXPOSED PAD AS WELL AS THE TERMINALS.

	MILLIMETERS	
DIM	MIN	MAX
A	0.80	1.00
A1	0.00	0.05
A3	0.20 REF	
b	0.20	0.30
D	4.00 BSC	
D2	2.70	2.90
E	4.00 BSC	
E2	2.70	2.90
e	0.50 BSC	
L	0.30	0.50
L1	0.05	0.15

RECOMMENDED SOLDERING FOOTPRINT

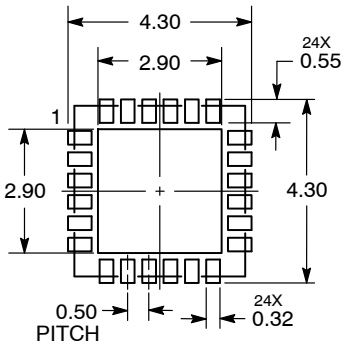

DIMENSIONS: MILLIMETERS

*For additional information on our Pb−Free strategy and soldering details, please download the **onsemi** Soldering and Mounting Techniques Reference Manual, SOLDERRM/D.

GENERIC MARKING DIAGRAM*



XXXXX = Specific Device Code
A = Assembly Location
L = Wafer Lot
Y = Year
W = Work Week
▪ = Pb−Free Package

(Note: Microdot may be in either location)

*This information is generic. Please refer to device data sheet for actual part marking. Pb−Free indicator, “G” or microdot “▪”, may or may not be present. Some products may not follow the Generic Marking.

DOCUMENT NUMBER:	**98AON11783D**	Electronic versions are uncontrolled except when accessed directly from the Document Repository. Printed versions are uncontrolled except when stamped “CONTROLLED COPY” in red.	
DESCRIPTION:	**QFN24, 4X4, 0.5P**		**PAGE 1 OF 1**

onsemi and onsemi are trademarks of Semiconductor Components Industries, LLC dba **onsemi** or its subsidiaries in the United States and/or other countries. **onsemi** reserves the right to make changes without further notice to any products herein. **onsemi** makes no warranty, representation or guarantee regarding the suitability of its products for any particular purpose, nor does **onsemi** assume any liability arising out of the application or use of any product or circuit, and specifically disclaims any and all liability, including without limitation special, consequential or incidental damages. **onsemi** does not convey any license under its patent rights nor the rights of others.

© Semiconductor Components Industries, LLC, 2019

QFN16 3*3*0.75 MM, 0.5 P
CASE 488AK
ISSUE O

DATE 13 SEP 2004



SCALE 2:1

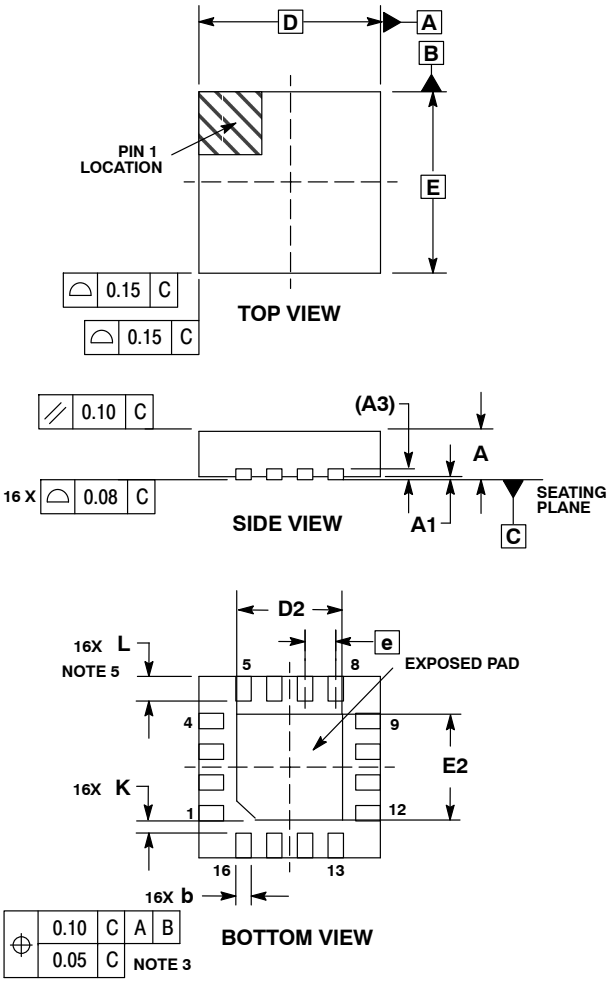

NOTES:
1. DIMENSIONING AND TOLERANCING PER ASME Y14.5M, 1994.
2. CONTROLLING DIMENSION: MILLIMETERS.
3. DIMENSION b APPLIES TO PLATED TERMINAL AND IS MEASURED BETWEEN 0.25 AND 0.30 MM FROM TERMINAL.
4. COPLANARITY APPLIES TO THE EXPOSED PAD AS WELL AS THE TERMINALS.
5. L_{max} CONDITION CAN NOT VIOLATE 0.2 MM SPACING BETWEEN LEAD TIP AND FLAG.

	MILLIMETERS	
DIM	MIN	MAX
A	0.70	0.80
A1	0.00	0.05
A3	0.20 REF	
b	0.18	0.30
D	3.00 BSC	
D2	1.65	1.85
E	3.00 BSC	
E2	1.65	1.85
e	0.50 BSC	
K	0.20	---
L	0.30	0.50

GENERIC MARKING DIAGRAM*

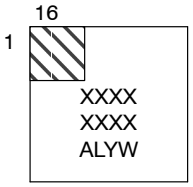

XXXX = Specific Device Code
A = Assembly Location
L = Wafer Lot
Y = Year
W = Work Week

*This information is generic. Please refer to device data sheet for actual part marking. Pb−Free indicator, “G”, may or not be present.

DOCUMENT NUMBER:	**98AON19612D**	Electronic versions are uncontrolled except when accessed directly from the Document Repository. Printed versions are uncontrolled except when stamped “CONTROLLED COPY” in red.	
DESCRIPTION:	**QFN16, 3*3*0.75 MM, 0.5 PITCH**		**PAGE 1 OF 1**

onsemi and onsemi are trademarks of Semiconductor Components Industries, LLC dba **onsemi** or its subsidiaries in the United States and/or other countries. **onsemi** reserves the right to make changes without further notice to any products herein. **onsemi** makes no warranty, representation or guarantee regarding the suitability of its products for any particular purpose, nor does **onsemi** assume any liability arising out of the application or use of any product or circuit, and specifically disclaims any and all liability, including without limitation special, consequential or incidental damages. **onsemi** does not convey any license under its patent rights nor the rights of others.

© Semiconductor Components Industries, LLC, 2004

onsemi, , and other names, marks, and brands are registered and/or common law trademarks of Semiconductor Components Industries, LLC dba "**onsemi**" or its affiliates and/or subsidiaries in the United States and/or other countries. **onsemi** owns the rights to a number of patents, trademarks, copyrights, trade secrets, and other intellectual property. A listing of **onsemi**'s product/patent coverage may be accessed at www.onsemi.com/site/pdf/Patent−Marking.pdf. **onsemi** reserves the right to make changes at any time to any products or information herein, without notice. The information herein is provided "as−is" and **onsemi** makes no warranty, representation or guarantee regarding the accuracy of the information, product features, availability, functionality, or suitability of its products for any particular purpose, nor does **onsemi** assume any liability arising out of the application or use of any product or circuit, and specifically disclaims any and all liability, including without limitation special, consequential or incidental damages. Buyer is responsible for its products and applications using **onsemi** products, including compliance with all laws, regulations and safety requirements or standards, regardless of any support or applications information provided by **onsemi**. "Typical" parameters which may be provided in **onsemi** data sheets and/or specifications can and do vary in different applications and actual performance may vary over time. All operating parameters, including "Typicals" must be validated for each customer application by customer's technical experts. **onsemi** does not convey any license under any of its intellectual property rights nor the rights of others. **onsemi** products are not designed, intended, or authorized for use as a critical component in life support systems or any FDA Class 3 medical devices or medical devices with a same or similar classification in a foreign jurisdiction or any devices intended for implantation in the human body. Should Buyer purchase or use **onsemi** products for any such unintended or unauthorized application, Buyer shall indemnify and hold **onsemi** and its officers, employees, subsidiaries, affiliates, and distributors harmless against all claims, costs, damages, and expenses, and reasonable attorney fees arising out of, directly or indirectly, any claim of personal injury or death associated with such unintended or unauthorized use, even if such claim alleges that **onsemi** was negligent regarding the design or manufacture of the part. **onsemi** is an Equal Opportunity/Affirmative Action Employer. This literature is subject to all applicable copyright laws and is not for resale in any manner.

ADDITIONAL INFORMATION

TECHNICAL PUBLICATIONS:
Technical Library: www.onsemi.com/design/resources/technical−documentation
onsemi Website: www.onsemi.com

ONLINE SUPPORT: www.onsemi.com/support
For additional information, please contact your local Sales Representative at www.onsemi.com/support/sales