Smart Card Interface IC

NCN8024

The NCN8024 is a single smart card interface IC. It is dedicated for 3.0 V/5.0 V smart card reader/writer applications.

The device is fully compatible with the ISO 7816−3 and EMV standards as well as with standards specifying conditional access in Set−Top−Box (STB) including NDS.

For details regarding device implementation refer to application note AND8452/D, available upon request (please contact your local **onsemi** sales office or representative).

Features

- Single IC Card Interface
- Fully Compatible with ISO 7816−3, EMV and Related Standards Including NDS
- Three Bidirectional Buffered I/O Level Shifters (C4, C7 and C8 Card Pins)
- 3.0 V or 5.0 V ± 5% Regulated Card Power Supply such as $I_{CC} \leq 75$ mA at $3.3\ V \leq V_{DDP} \leq 5.5\ V$
- Independent Power Supply Range on Controller Interface ($2.7\ V < V_{DD} < 5.5\ V$)
- Handles 3.0 V and 5.0 V Smart Cards
- Thermal and Short Circuit Protection on all Card Pins
- Support up to 18 MHz Clock with Internal Division Ratio 1/1, 1/2, 1/4 and 1/8 through CLKDIV1 and CLKDIV2 Pins
- ESD Protection on Card Pins up to 8 kV+ (Human Body Model)
- Activation/Deactivation Sequences (ISO7816)
- Fault Protection Mechanisms Enabling Automatic Device Deactivation in Case of Overload, Overheating, Card Take−off or Power Supply Drop−out
- Interrupt Signal $\overline{INT}$ for Card Presence and Faults
- External Undervoltage Lockout Threshold Adjustment on V_{DD} (PORADJ Pin)
- Available in 2 Package Formats: SOIC−28 and TSSOP−28
- These are Pb−Free Devices

Typical Application

- Set−Top Boxes Conditional Access & Pay−TV
- Conditional Access Modules (CAM)
- POS / ATM
- Access Control, Identification

MARKING DIAGRAMS

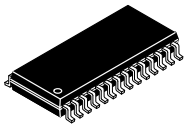

SOIC−28
CASE 751F

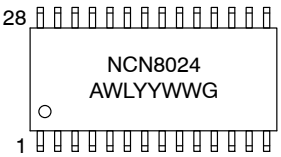



TSSOP−28
CASE 948AA

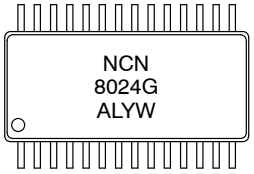

NCN8024 = Specific Device Code
A = Assembly Location
WL, L = Wafer Lot
YY, Y = Year
WW, W = Work Week
G = Pb−Free Package

ORDERING INFORMATION

See detailed ordering and shipping information on page 14 of this data sheet.

© Semiconductor Components Industries, LLC, 2012

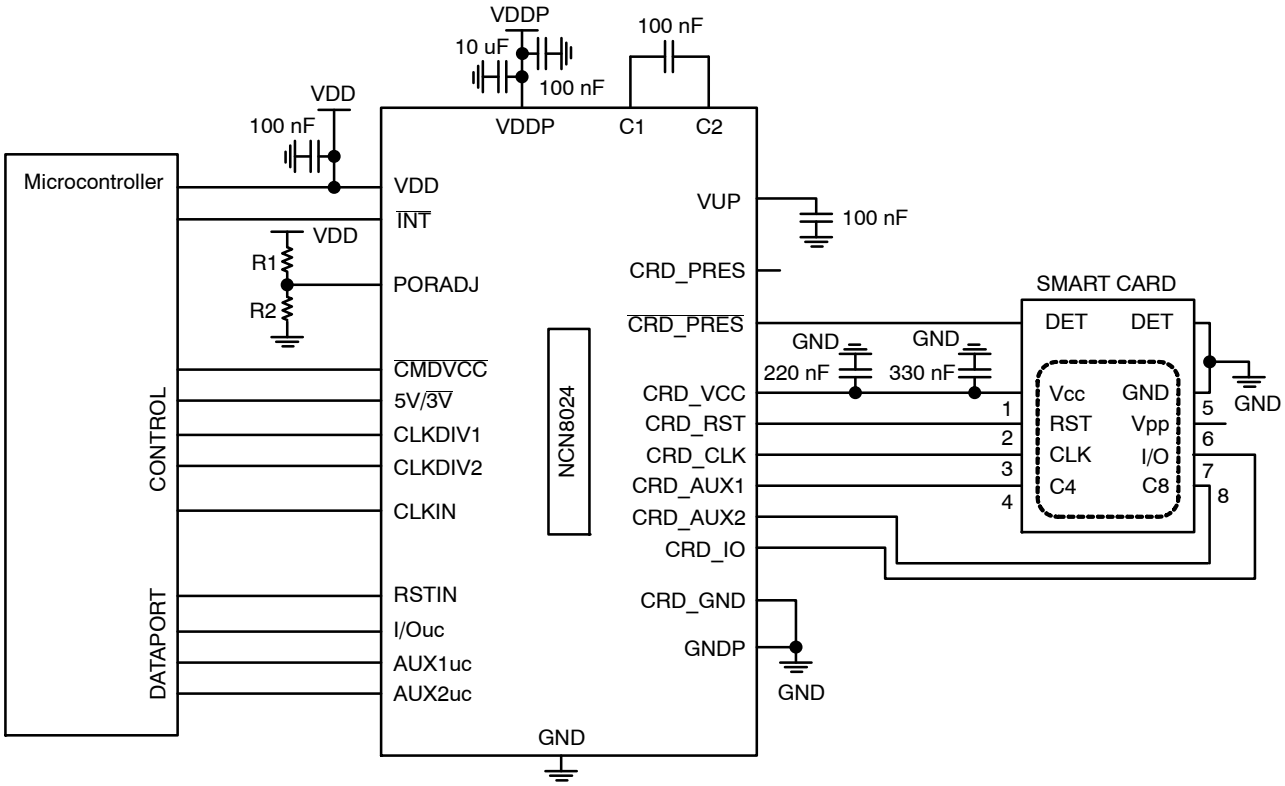

Figure 1. Typical Smart Card Interface Application

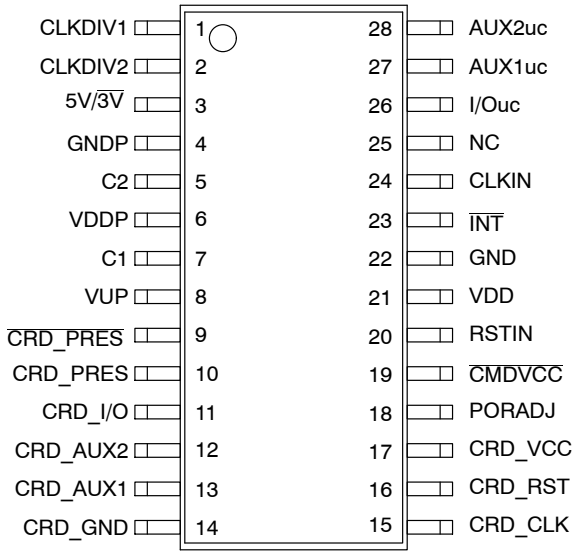

Figure 2. SOIC−28 and TSS0P−28 Pinout (Top View)

Share Feedback
Your Opinion Matters

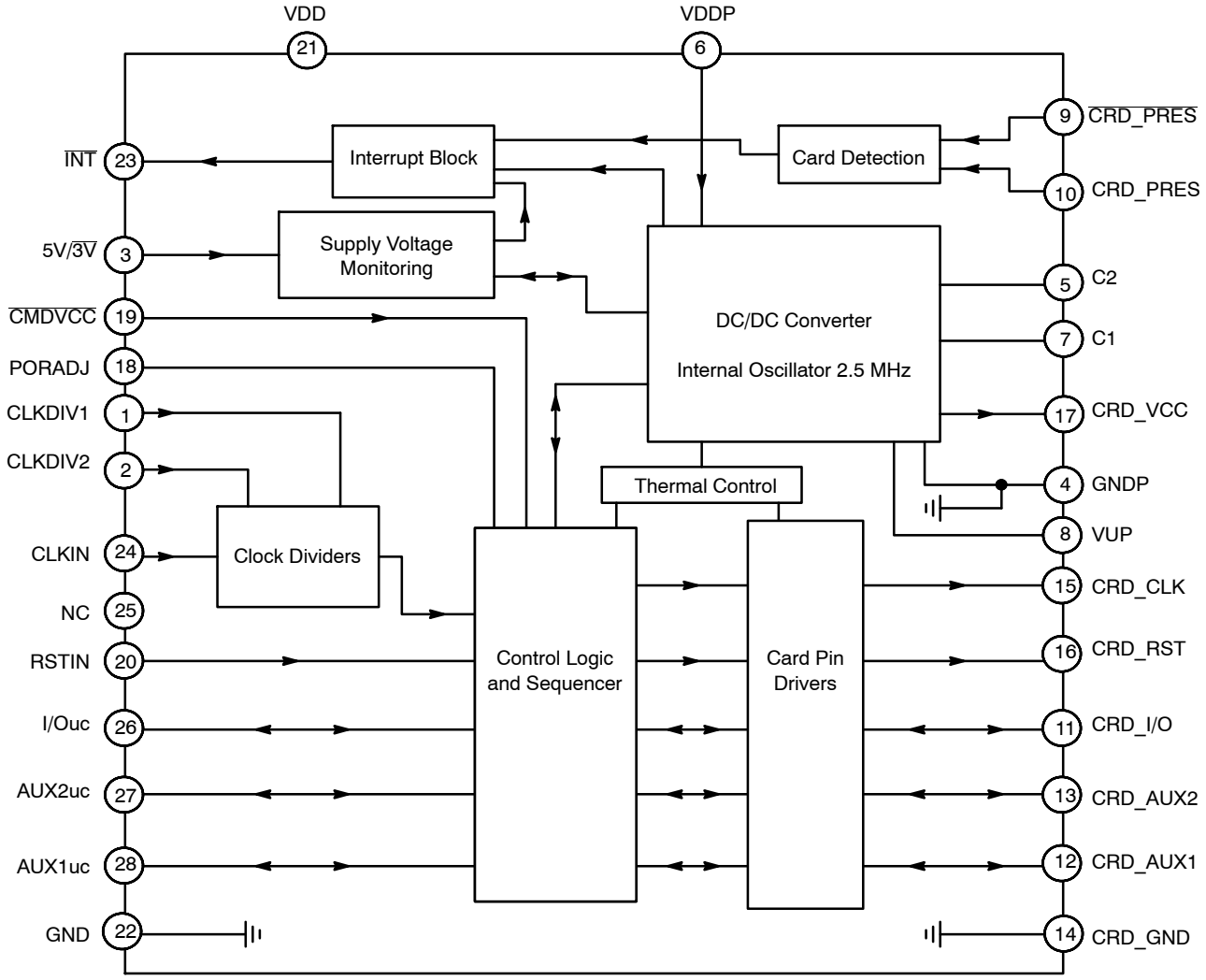

Figure 3. NCN8024 Block Diagram

PIN FUNCTION AND DESCRIPTION

Pin #	Name	Type	Description
1	CLKDIV1	Input	This pin coupled with CLKDIV2 is used to program the clock frequency division ratio (Table 1).
2	CLKDIV2	Input	This pin coupled with CLKDIV1 is used to program the clock frequency division ratio (Table 1).
3	5V/$\overline{3V}$	Input	Allows selecting card V_{CC} power supply voltage. CRD_V_{CC} = 5 V when 5V/$\overline{3V}$ = HIGH or 3 V when 5V/$\overline{3V}$ = LOW
4	GNDP	GND	DC/DC Converter Power Supply Ground
5	C2	Power	DC/DC Converter Capacitor pin number 2 – A 100 nF capacitor is connected between this pin and pin C1. The capacitor has to feature an ESR lower than 100 mΩ
6	VDDP	Power	DC/DC Converter Power Supply Voltage
7	C1	Power	DC/DC Converter Capacitor pin number 1 – A 100 nF capacitor is connected between this pin and pin C2. The capacitor has to feature an ESR lower than 100 mΩ
8	VUP	Power	Charge−pump output – a very low ESR 100 nF capacitor (ESR< 100 mΩ) is connected between this pin and GNDP
9	$\overline{CRD_PRES}$	Input	Card presence pin active (card present) when $\overline{CRD_PRES}$ = Low. A built−in debounce timer of about 8 ms is activated when a card is inserted.
10	CRD_PRES	Input	Card presence pin active (card present) when CRD_PRES = High. A built−in debounce timer of about 8 ms is activated when a card is inserted.

Share Feedback
Your Opinion Matters

PIN FUNCTION AND DESCRIPTION

Pin #	Name	Type	Description
11	CRD_I/O	Input/ Output	This pin handles the connection to the serial I/O (C7) of the card connector. A bi−directional level translator adapts the serial I/O signal between the card and the micro controller. An 11 kΩ (typical) pullup resistor to CRD_V_{CC} provides a High impedance state for the smart card I/O link.
12	CRD_AUX2	Input/ Output	This pin handles the connection to the chip card's serial auxiliary AUX2 I/O pin (C8). A bi−directional level translator adapts the serial I/O signal between the card and the micro controller. An 11 kΩ (typical) pullup resistor to CRD_V_{CC} provides a High impedance state for the smart card C8 pin.
13	CRD_AUX1	Input/ Output	This pin handles the connection to the chip card's serial auxiliary AUX1 I/O pin (C4). A bi−directional level translator adapts the serial I/O signal between the card and the micro controller. An 11 kΩ (typical) pullup resistor to CRD_V_{CC} provides a High impedance state for the smart card C4 pin.
14	CRD_GND	GND	Card Ground
15	CRD_CLK	Output	This pin is connected to the CLOCK card connector's pin (Chip card's pin C3). The Clock signal comes from the CLKIN input through clock dividers and level shifter.
16	CRD_RST	Output	This pin is connected to the chip card's RESET pin (C2) through the card connector. A level translator adapts the external Reset (RSTIN) signal to the smart card.
17	CRD_VCC	Power	This pin is connected to the smart card power supply pin. An internal DC/DC converter is programmable using the pin 5V/$\overline{3V}$ to supply either 5 V or 3 V output voltage. An external distributed ceramic capacitor (200 nF + 330 nF typical recommended) must be connected across CRD_V_{CC} and CRD_GND. This set of capacitor (if distributed) must be low ESR (< 100 mΩ).
18	PORADJ	Input	Power−on reset threshold adjustment input pin for changing the reset threshold with an external resistor power divider. Recommended to be connected to ground when unused.
19	$\overline{\text{CMDVCC}}$	Input	Command VCC pin. Activation sequence Enable/Disable pin (active Low). The activation sequence is enabled by toggling $\overline{\text{CMDVCC}}$ High to Low and when a card is present.
20	RSTIN	Input	This Reset input connected to the host and referred to V_{DD} (microcontroller side), is connected to the smart card Reset pin through the internal level shifter which translates the level according to the CRD_V_{CC} programmed value.
21	VDD	Power	This pin is connected to the system controller power supply. It configures the level shifter input stage to accept the signals coming from the controller. A 0.1 μF capacitor shall be used to bypass the power supply voltage. When V_{DD} is below 2.35 V typical the card pins are disabled.
22	GND	GND	Ground
23	$\overline{\text{INT}}$	Output	The interrupt request is activated LOW on this pin. This is enabled when a card is present and the card presence is detected by CRD_PRES or $\overline{\text{CRD_PRES}}$ pins. Similarly an interrupt is generated when CRD_V_{CC} is overloaded. 20 kΩ typical integrated pullup resistor to V_{DD}.
24	CLKIN	Input	Clock Input for External Clock
25	NC		Unconnected
26	I/Ouc	Input/ Output	This pin is connected to an external micro−controller. A bi−directional level translator adapts the serial I/O signal between the smart card and the external controller. A built−in constant 11 kΩ (typical) resistor provides a high impedance state.
27	AUX1uc	Input/ Output	This pin is connected to an external micro−controller. A bi−directional level translator adapts the serial C4 signal between the smart card and the external controller. A built−in constant 11 kΩ (typical) resistor provides a high impedance state.
28	AUX2uc	Input/ Output	This pin is connected to an external micro−controller. A bi−directional level translator adapts the serial C8 signal between the smart card and the external controller. A built−in constant 11 kΩ (typical) resistor provides a high impedance state.

Share Feedback
Your Opinion Matters

ATTRIBUTES

Characteristics	Values
ESD protection Human Body Model (HBM) (Note 1) Card Pins (Card Interface Pins 9 – 17) All Other Pins Machine Model (MM) Card Pins (Card Interface Pins 9 – 17) All Other Pins	 8 kV 2 kV 400 V 150 V
Moisture sensitivity (Note 2) SOIC−28 and TSSOP−28	Level 3
Flammability Rating Oxygen Index: 28 to 34	UL 94 V−0 @ 0.125 in
Meets or exceeds JEDEC Spec EIA/JESD78 IC Latch−up Test	

1. Human Body Model (HBM), R = 1500 Ω, C = 100 pF.
2. For additional information, see Application Note AND8003/D.

MAXIMUM RATINGS (Note 3)

Rating	Symbol	Value	Unit
DC/DC Converter Power Supply Voltage	V_{DDP}	$-0.3 \le V_{DDP} \le 5.5$	V
Power Supply from Microcontroller Side	V_{DD}	$-0.3 \le V_{DD} \le 5.5$	V
External Card Power Supply	CRD_V_{CC}	$-0.3 \le$ CRD_$V_{CC} \le 5.5$	V
Charge Pump Output	V_{UP}	$-0.3 \le V_{UP} \le 5.5$	
Digital Input Pins	V_{in}	$-0.3 \le V_{in} \le V_{DD}$	V
Digital Output Pins (I/Ouc, AUX1uc, AUX2uc, $\overline{INT}$)	V_{out}	$-0.3 \le V_{out} \le V_{DD}$	V
Smart Card Output Pins	V_{out}	$-0.3 \le V_{out} \le$ CRD_V_{CC}	V
Thermal Resistance Junction−to−Air SOIC−28 TSSOP−28	$R_{\theta JA}$	75 76	°C/W
Operating Ambient Temperature Range	T_A	−40 to +85	°C
Operating Junction Temperature Range	T_J	−40 to +125	°C
Maximum Junction Temperature	T_{Jmax}	+125	°C
Storage Temperature Range	T_{stg}	−65 to + 150	°C

Stresses exceeding those listed in the Maximum Ratings table may damage the device. If any of these limits are exceeded, device functionality should not be assumed, damage may occur and reliability may be affected.

3. Maximum electrical ratings are defined as those values beyond which damage to the device may occur at T_A = +25°C

Share Feedback
Your Opinion Matters

POWER SUPPLY SECTION (V_{DD} = 3.3 V; V_{DDP} = 5 V; T_{amb} = 25°C; F_{CLKIN} = 10 MHz)

Pin	Symbol	Rating	Min	Typ	Max	Unit
6	V_{DDP}	DC/DC Converter Power Supply, CRD_V_{CC} = 3 V and 5 V with DC Load Such as $\|I_{CC}\| \leq$ 75 mA $\|I_{CC}\| \leq$ 20 mA	 3.3 3.0	 5.0	 5.5 5.5	V
6	V_{DDP}	NDS Conditions: DC/DC Converter Power Supply, CRD_V_{CC} = 3 V and 5 V with 75 mA Load Transient from 100 Hz to 200 MHz and /CMDVCC Cycling (Note 4): $\|I_{CC}\| \leq$ 75 mA $\|I_{CC}\| \leq$ 20 mA	 4.5 3.15	 5.0	 5.5 5.5	V
6	I_{DDP}	Inactive Mode	–	–	0.3	mA
6	I_{DDP}	DC Operating Supply Current, F_{CLKIN} = 10 MHz, $Cout_{CRD_CLK}$ = 33 pF, $\|I_{CRD_VCC}\|$ = 0	–	–	5.0	mA
6	I_{DDP}	DC Operating Supply Current, CRD_V_{CC} = 5 V, I_{CRD_VCC} = 75 mA CRD_V_{CC} = 3 V, I_{CRD_VCC} = 75 mA	–	–	 200 200	mA
21	V_{DD}	Operating Voltage	2.7	–	5.5	V
21	I_{VDD}	Inactive Mode 0 Standby Current	–	–	0.6	mA
21	I_{VDD}	Operating Current – F_{CLK_IN} = 10 MHz, $Cout_{CRD_CLK}$ = 33 pF, $\|I_{CRD_VCC}\|$ = 0	–	–	1	mA
21	$UVLOV_{DD}$	Undervoltage Lockout (UVLO), No External Resistor at Pin PORADJ (Connected to GND), Falling V_{DD} Level	2.25	2.35	2.45	V
21	UVLOHys	UVLO Hysteresis, No External Resistor at Pin PORADJ (Connected to GND)	50	130	180	mV
PORADJ PIN						
18	V_{PORth+}	External Rising Threshold Voltage on V_{DD} for Power On Reset – Pin PORADJ	1.18	1.24	1.3	V
18	V_{PORth-}	External Falling Threshold voltage on V_{DD} for Power On Reset – Pin PORADJ	1.13	1.18	1.24	V
18	V_{PORHys}	Hysteresis on V_{PORth} (pin PORADJ)	30	60	100	mV
18	t_{POR}	Width of Power−On Reset Pulse (Note 4) No External Resistor on PORADJ External Resistor on PORADJ	 4 4	 8 8	 12 12	ms
18	I_{IL}	Low Level Input Leakage Current, V_{IL}<0.5 V (Pulldown Current Source)		5		μA
DC/DC CONVERTER						
	F_{CLK}	DC/DC Converter Clock Frequency when Card Active (Note 4)	2.2		3.2	MHz
8	V_{UP}	Output Voltage on pin V_{UP} (average value) CRD_V_{CC} = 5V CRD_V_{CC} = 3V	 5.0 5.0	 5.23 5.23	 5.5 5.5	V
17	C_{CRD_VCC}	Output Capacitance on card power supply CRD_V_{CC} (Notes 4 and 5)	300	220 + 320	1000	nF
17	CRD_V_{CC}	Output Card Supply Voltage @ 4.5 V< V_{DDP} < 5.5 V (including ripple) CRD_V_{CC} = 3.0 V @ $I_{load} \leq$ 65 mA CRD_V_{CC} = 5.0 V @ $I_{load} \leq$ 65 mA	 2.85 4.75	 3.00 5.00	 3.15 5.25	V

NOTE: Device will meet the specifications after thermal equilibrium has been established when mounted in a test socket or printed circuit board with maintained transverse airflow greater than 500 lfpm. Electrical parameters are guaranteed only over the declared operating temperature range. Functional operation of the device exceeding these conditions is not implied. Device specification limit values are applied individually under normal operating conditions and not valid simultaneously.

4. Guaranteed by design and characterization
5. These values take into account the tolerance of the cms capacitor used. The allowed values are single or distributed capacitor combination not exceeding 1.0 μF with 220 nF + 330 nF typical and recommended. It is recommended to use X5R or X7R−type capacitors with very low ESR (< 100 mΩ) for optimal performances.

Share Feedback
Your Opinion Matters

POWER SUPPLY SECTION (V_{DD} = 3.3 V; V_{DDP} = 5 V; T_{amb} = 25°C; F_{CLKIN} = 10 MHz)

Pin	Symbol	Rating	Min	Typ	Max	Unit
DC/DC CONVERTER						
17	CRD_V_{CC}	Output Card Supply Voltage @ 3.6 V ≤ V_{DDP} ≤ 5.5 V with $\|I_{CC}\|$ ≤ 65 mA load transient from 100 Hz to 200 MHz (including ripple) (Note 4) CRD_V_{CC} = 3.0 V CRD_V_{CC} = 5.0 V	 2.76 4.65	 3.00 5.00	 3.20 5.25	 V V
17	CRD_V_{CC}	Output Card Supply Voltage @ 4.5 V< V_{DDP} < 5.5 V with Current−Load Pulses of 40 nAs/t < 400 ns and $\|I_{CC}\|$ < 200 mA Peak Current (Including Ripple) (Note 4) CRD_V_{CC} = 3.0 V CRD_V_{CC} = 5.0 V	 2.76 4.65	 3.00 5.00	 3.20 5.25	 V V
17	I_{CRD_VCC}	Card Supply Current @ CRD_V_{CC} = 3.0 V @ CRD_V_{CC} = 5.0 V			 75 75	mA
17	$I_{CRD_VCC_SC}$	Short−Circuit Current − CRD_V_{CC} Shorted to Ground		110	150	mA
17	ΔV_{CRD_VCC}	Output Card Supply Voltage Ripple Peak−to−Peak − f_{ripple} = 100 Hz to 200 MHz (Load Transient with 65 mA Peak Current) (Note 4)			350	mV
17	CRD_V_{CCSR}	Slew Rate on CRD_V_{CC} Up or Down (Note 4)			0.22	V/μs

NOTE: Device will meet the specifications after thermal equilibrium has been established when mounted in a test socket or printed circuit board with maintained transverse airflow greater than 500 lfpm. Electrical parameters are guaranteed only over the declared operating temperature range. Functional operation of the device exceeding these conditions is not implied. Device specification limit values are applied individually under normal operating conditions and not valid simultaneously.

4. Guaranteed by design and characterization
5. These values take into account the tolerance of the cms capacitor used. The allowed values are single or distributed capacitor combination not exceeding 1.0 μF with 220 nF + 330 nF typical and recommended. It is recommended to use X5R or X7R−type capacitors with very low ESR (< 100 mΩ) for optimal performances.

DIGITAL INPUT/OUTPUT SECTION CLKIN, RSTIN, I/Ouc, AUX1uc, AUX2uc, CLKDIV1, CLKDIV2, $\overline{\text{CMDVCC}}$, 5V/$\overline{\text{3V}}$
(V_{DD} = 3.3 V; V_{DDP} = 5 V; T_{amb} = 25°C; F_{CLKIN} = 10 MHz)

Pin	Symbol	Rating	Min	Typ	Max	Unit
24	F_{CLKIN}	Clock Frequency on Pin CLKIN (with Divider Ratio ≥ 2) (Note 6)	−	−	27	MHz
1, 2, 3, 19, 20, 24, 26, 27, 28	V_{IL}	Input Voltage Level Low: CLKIN, RSTIN, I/Ouc, AUX1uc, AUX2uc, CLKDIV1, CLKDIV2, $\overline{\text{CMDVCC}}$, 5V/$\overline{\text{3V}}$	−0.3	−	0.3 x V_{DD}	V
1, 2, 3, 19, 20, 24, 26, 27, 28	V_{IH}	Input Voltage Level High: CLKIN, RSTIN, I/O, AUX1, AUX2, CLKDIV1, CLKDIV2, $\overline{\text{CMDVCC}}$, 5V/$\overline{\text{3V}}$	0.7 x V_{DD}	−	V_{DD} + 0.3	V
1, 2, 3, 19, 20, 24	I_{IL}	CLKDIV1, CLKDIV2, $\overline{\text{CMDVCC}}$, RSTIN, CLKIN, 5V/3V Low Level Input Leakage Current, V_{IL} = 0 V	−	−	1.0	μA
1, 2, 3, 19, 20, 24	I_{IH}	CLKDIV1, CLKDIV2, $\overline{\text{CMDVCC}}$, RSTIN, CLKIN, 5V/3V Low Level Input Leakage Current, V_{IH} = V_{DD}	−	−	1.0	μA
26, 27, 28	I_{IL}	I/Ouc, AUX1uc, AUX2uc Low Level Input Leakage Current, V_{IL} = 0 V	−	−	600	μA
26, 27, 28	I_{IH}	I/Ouc, AUX1uc, AUX2uc High Level Input Leakage Current, V_{IH} = V_{DD}	−	−	10	μA

NOTE: Device will meet the specifications after thermal equilibrium has been established when mounted in a test socket or printed circuit board with maintained transverse airflow greater than 500 lfpm. Electrical parameters are guaranteed only over the declared operating temperature range. Functional operation of the device exceeding these conditions is not implied. Device specification limit values are applied individually under normal operating conditions and not valid simultaneously.

6. Guaranteed by design and characterization

Share Feedback
Your Opinion Matters

DIGITAL INPUT/OUTPUT SECTION CLKIN, RSTIN, I/Ouc, AUX1uc, AUX2uc, CLKDIV1, CLKDIV2, $\overline{\text{CMDVCC}}$, 5V/$\overline{\text{3V}}$
(V_{DD} = 3.3 V; V_{DDP} = 5 V; T_{amb} = 25°C; F_{CLKIN} = 10 MHz)

Pin	Symbol	Rating	Min	Typ	Max	Unit
26, 27, 28	V_{OH}	I/Ouc, AUX1uc, AUX2uc data channels, @ Cs ≤ 30 pF High Level Output Voltage (CRD_I/O = CRD_AUX1 = CRD_AUX2 = CRD_V_{CC}) I_{OH} = 0 I_{OH} = −40 μA	0.9 x V_{DD} 0.75 x V_{DD}	– –	V_{DD} + 0.1 V_{DD} + 0.1	V V
	V_{OL}	Low Level Output Voltage (C_I/O= CRD_AUX1 = CRD_AUX2 = 0 V) I_{OL} = +1 mA	0	–	0.3	V
	$t_{Ri/Fi}$	Input Rising/Falling Times (Note 6)	–	–	1.2	μs
	$t_{Ro/Fo}$	Output Rising/Falling Times (Note 6)	–	–	0.1	μs
26, 27, 28	F_{bidi}	Maximum Frequency through Bidirectional I/O, AUX1 and AUX2 Channels (Note 6)	–	–	1	MHz
26, 27, 28	R_{pu}	I/0uc, AUX1uc, AUX2uc Pullup Resistor	8.0	11	16	kΩ
23	V_{OH}	Output High Voltage $\overline{\text{INT}}$ @ I_{OH} = −15 μA (Source)	0.75 x V_{DD}	–	–	V
23	V_{OL}	Output Low Voltage $\overline{\text{INT}}$ @ I_{OL} = 2 mA (Sink)	0	–	0.30	V
23	R_{INT}	$\overline{\text{INT}}$ Pullup Resistor	14	20	26	kΩ

NOTE: Device will meet the specifications after thermal equilibrium has been established when mounted in a test socket or printed circuit board with maintained transverse airflow greater than 500 lfpm. Electrical parameters are guaranteed only over the declared operating temperature range. Functional operation of the device exceeding these conditions is not implied. Device specification limit values are applied individually under normal operating conditions and not valid simultaneously.

6. Guaranteed by design and characterization

Share Feedback
Your Opinion Matters

SMART CARD INTERFACE SECTION, CRD_IO, CRD_AUX1, CRD_AUX2, CRD_CLK, CRD_RST, CRD_PRES, $\overline{\text{CRD_PRES}}$ (V_{DD} = 3.3 V; V_{DDP} = 5 V; T_{amb} = 25°C; F_{CLKIN} = 10 MHz)

Pin	Symbol	Rating	Min	Typ	Max	Unit
16		CRD_RST @ CRD_V_{CC} = 3.0 V, 5.0 V				
	V_{OH}	Output RESET V_{OH} @ I_{rst} = −200 μA	0.9 x CRD_V_{CC}	–	CRD_V_{CC}	V
	V_{OL}	Output RESET V_{OL} @ I_{rst} = 200 μA	0	–	0.20	V
	V_{OH}	Output RESET V_{OH} @ I_{rst} = −20 mA	0	–	0.4	V
	V_{OL}	Output RESET V_{OL} @ I_{rst} = 20 mA	CRD_V_{CC} − 0.4	–	CRD_V_{CC}	V
	t_R	Output RESET Risetime @ C_{out} = 100 pF (Note 7)	–	–	100	ns
	t_F	Output RESET Falltime @C_{out} = 100 pF (Note 7)	–	–	100	ns
	t_d	RSTIN to CRD_RST Delay − Reset Enabled (Note 7)	–	–	2	μs
15		CRD_CLK @ CRD_V_{CC} = 3.0 V or 5.0 V				
	F_{CRDCLK}	Output Frequency (Note 7)	–	–	18	MHz
	V_{OH}	Output CRD_CLK V_{OH} @ I_{clk} = −200 μA	0.9 x CRD_V_{CC}	–	CRD_V_{CC}	V
	V_{OL}	Output CRD_CLK V_{OL} @ I_{clk} = 200 μA	0	–	+0.2	V
	V_{OH}	Output CRD_CLK V_{OH} @ I_{clk} = −70 mA	0	–	0.4	V
	V_{OL}	Output CRD_CLK V_{OL} @ I_{clk} = 70 mA	CRD_V_{CC} −0.4	–	CRD_V_{CC}	V
	F_{DC}	Output Duty Cycle (Note 7)	45	–	55	%
		Rise & Fall time (Note 5)				
	t_{rills}	Output CRD_CLK Risetime @ C_{out} = 30 pF	–	–	16	ns
	t_{ulsa}	Output CRD_CLK Falltime @ C_{out} = 30 pF	–	–	16	ns
	SR	Slew Rate @ Cout = 33 pF (Note 7)	0.2	–	–	V/ns
11, 12, 13		CRD_AUX1, CRD_AUX2, CRD_IO @ CRD_V_{CC} = 3.0 V, 5.0 V				
	V_{IH}	Input Voltage High Level (5 V Mode)	2.5	–	CRD_V_{CC}+0.3	V
	V_{IH}	Input Voltage High Level (3 V Mode)	1.6	–	CRD_V_{CC}+0.3	V
	V_{IL}	Input Voltage Low Level	0.30	–	0.80	V
	I_{IL}	Low Level Input Current V_{IL} = 0 V	–	–	600	μA
	I_{IH}	High Level Input Current V_{IH} = CRD_V_{CC}	–		10	μA
	V_{OH}	Output V_{OH} @ I_{OH} = −40 μA	0.75 x CRD_V_{CC}	–	CRD_V_{CC}+0.1	V
	V_{OL}	Output V_{OL} @ I_{OL} = 1 mA, V_{IL} = 0 V	0	–	0.30	V
	$t_{Ri/Fi}$	Input Rising/Falling Times	–	–	1.2	μs
	$t_{Ro/Fo}$	Output Rising/Falling Times / C_{out} = 80 pF	–	–	0.1	μs
11, 12, 13	R_{PU}	CRD_AUX1, CRD_AUX2, CRD_IO Pullup Resistor	8.0	11	16	kΩ
	t_{IO}	Propagation delay I_{Ouc} –> CRD_IO and CRD_IO –> IOuc (Falling Edge) (Note 7)	–	–	200	ns
	t_{pu}	Active pull−up pulse width buffers I/O, AUX1 & AUX2 (Note 7)	–	200	–	ns
9, 10		CRD_PRES, $\overline{\text{CRD_PRES}}$				V
	V_{IH}	Card Presence Voltage High Level	0.7 x V_{DD}		V_{DD} + 0.3	
	V_{IL}	Card Presence Voltage Low Level	−0.3		0.3 x V_{DD}	

NOTE: Device will meet the specifications after thermal equilibrium has been established when mounted in a test socket or printed circuit board with maintained transverse airflow greater than 500 lfpm. Electrical parameters are guaranteed only over the declared operating temperature range. Functional operation of the device exceeding these conditions is not implied. Device specification limit values are applied individually under normal operating conditions and not valid simultaneously.

7. Guaranteed by design and characterization

Share Feedback
Your Opinion Matters

SMART CARD INTERFACE SECTION, CRD_IO, CRD_AUX1, CRD_AUX2, CRD_CLK, CRD_RST, CRD_PRES, $\overline{\text{CRD_PRES}}$ (V_{DD} = 3.3 V; V_{DDP} = 5 V; T_{amb} = 25°C; F_{CLKIN} = 10 MHz)

Pin	Symbol	Rating	Min	Typ	Max	Unit
9, 10		CRD_PRES, $\overline{\text{CRD_PRES}}$				µA
	$\lvert I_{IH}\rvert$	High level input leakage current, $V_{IH} = V_{DD}$				
		CRD_PRES		5	10	
		$\overline{\text{CRD_PRES}}$			1	
	$\lvert I_{IL}\rvert$	Low level input leakage current, V_{IL} = 0 V				
		CRD_PRES			1	
		$\overline{\text{CRD_PRES}}$		5	10	
9, 10	$T_{debounce}$	Debounce Time CRD_PRES and $\overline{\text{CRD_PRES}}$ (Note 7)	5	8	11	ms
11, 12, 13, 16	I_{CRD_IO}	CRD_IO, CRD_AUX1, CRD_AUX2 Current Limitation	–	–	15	mA
15	I_{CRD_CLK}	CRD_CLK Current Limitation	–	–	70	mA
16	I_{CRD_RST}	CRD_RST Current Limitation	–	–	20	mA
	t_{act}	Activation Time (Note 7)	30	–	100	µs
	t_{deact}	Deactivation Time (Note 7)	30	–	250	µs
	Temp $_{SD}$	Shutdown Temperature	–	160	–	°C

NOTE: Device will meet the specifications after thermal equilibrium has been established when mounted in a test socket or printed circuit board with maintained transverse airflow greater than 500 lfpm. Electrical parameters are guaranteed only over the declared operating temperature range. Functional operation of the device exceeding these conditions is not implied. Device specification limit values are applied individually under normal operating conditions and not valid simultaneously.

7. Guaranteed by design and characterization

POWER SUPPLY

The NCN8024 smart card interface has two power supplies: V_{DD} and V_{DDP}.

V_{DD} is usually common to the system controller and the interface. The applied V_{DD} ranges from 2.7 V up to 5.5 V. If V_{DD} goes below 2.35 V typical ($UVLO_{VDD}$) a power−down sequence is automatically performed. In that case the interrupt ($\overline{\text{INT}}$) pin is set Low.

A built−in charge−pump−based DC/DC converter followed by a Low Drop−Out (LDO) regulator is used to provide the 3 V or 5 V power supply voltage (CRD_V_{CC}) to the card. V_{DDP} is the converter's input voltage. VUP is the charge−pump converter's output. It is connected to the LDO input. A reservoir capacitor of 100 nF is connected to VUP. CRD_V_{CC} is the LDO output. Even if the converter can operate with a single output reservoir capacitor as low as 100 nF at CRD_V_{CC}, it is recommended to use a capacitor of at least 320 nF in order to satisfy the datasheet specifications. The best recommended combination guaranteeing optimal performances consists in a distributed set of capacitors 220 nF + 330 nF (in particular recommended for optimally satisfying the NDS standard). To minimize dI/dt effects, the fly capacitor (100 nF) and the reservoir capacitors VUP and CRD_V_{CC} have to be connected as close as possible to the corresponding device's pin and feature very low ESR values (lower than 50 mΩ). The fly capacitor is connected between C1 and C2. The decoupling capacitors on V_{DD} and V_{DDP} respectively 100 nF and 10 µF have also to be connected close to the respective IC pins.

The CRD_VCC pin can source up to 75 mA continuously over the V_{DDP} range (from 3.3 V to 5.5 V), the absolute maximum current being internally limited below 150 mA (Typical at 110 mA). CRD_VCC can stay in the range 4.6 V – 5.30 V during current transient up to 200 mA (peak current) over less than 400 ns of current pulse duration such as the charge transient is lower than 40 nAs.

There's no specific sequence for applying V_{DD} or V_{DDP}. They can be applied to the interface in any sequence. After powering the device $\overline{\text{INT}}$ remains Low until a card is inserted.

SUPPLY VOLTAGE MONITORING

The supply voltage monitoring block includes the Power On Reset (POR) circuitry and the under voltage lockout (UVLO) detection (V_{DD} voltage dropout detection). PORADJ pin allows the user, according to the considered application, to adjust the V_{DD} UVLO threshold. If not used PORADJ pin is connected to Ground.

The input supply voltage is continuously monitored to prevent under voltage operation. At power up, the system initializes the internal logic during POR timing and no further signal can be provided or supported during this period. Such initialization takes place when the input voltage rises between 2 V to 2.6 V about typical.

The system is ready to operate when the input voltage has reached the minimum 2.7 V. Considering this, the NCN8024 will detect an Under−Voltage situation when the input supply voltage will drop below 2.35 V typical. When V_{DD} goes down below the UVLO falling threshold a deactivation sequence is performed.

The device is inactive during power−on and power−off of the V_{DD} supply (8 ms reset pulse).

Share Feedback
Your Opinion Matters

PORADJ pin is used to modify the UVLO threshold according to the below relationship considering an external resistor divider R1 / R2 (see block diagram Figure 1):

$$UVLO = \frac{R1 + R2}{R2} V_{POR}$$

If PORADJ is connected to Ground the V_{DD} UVLO threshold (V_{DD} falling) is typically 2.35 V. In some cases it can be interesting to adjust this threshold at a higher value and by the way increase the V_{DD} supply dropout detection level which enables a deactivation sequence if the V_{DD} voltage is too low.

For example, there are microcontrollers for which the minimum supply voltage insuring a correct operating is higher than 2.55 V, increasing $UVLO_{VDD}$ (V_{DD} falling) is consequently necessary. Considering for instance a resistor bridge with R1 = 56 kΩ, R2 = 42 kΩ and V_{POR-} = 1.18 V typical the V_{DD} dropout detection level can be increased up to:

$$UVLO = \frac{59k + 42k}{42k} V_{POR-} = 2.75\ V$$

The minimum dropout detection voltage should be higher than 2 V.

The maximum detection level may be up to VDD.

CLOCK DIVIDER:

The input clock can be divided by 1/1, 1/2, 1/4, or 1/8, depending upon the specific application, prior to be applied to the smart card driver. These division ratios are programmed using pins CLKDIV1 and CLKDIV2 (see Table 1). The input clock is provided externally to pin CLKIN.

Table 1. Clock Frequency Programming

CLKDIV1	CLKDIV2	F_{CRD_CLK}
0	0	CLKIN/8
0	1	CKLKIN / 4
1	0	CLKIN
1	1	CLKIN / 2

The clock input stage (CLKIN) can handle a 27 MHz maximum frequency signal (considering a division ratio ≥ 2). Of course, the ratio must be defined by the user to cope with Smart Card considered in a given application

In order to avoid any duty cycle out of the 45% / 55% range specification, the divider is synchronized by the last flip flop, thus yielding a constant 50% duty cycle, whatever be the divider ratio 1/2, 1/4 or 1/8. On the other hand, the output signal Duty Cycle cannot be guaranteed 50% if the division ratio is 1 and if the input Duty Cycle signal is not within the 46 – 56% range at the CLKIN input.

When the signal applied to CLKIN is coming from the external controller, the clock will be applied to the card under the control of the microcontroller or similar device after the activation sequence has been completed.

DATA I/O, AUX1 and AUX2 LEVEL SHIFTERS

The three bidirectional level shifters I/O, AUX1 and AUX2 adapt the voltage difference that might exist between the micro−controller and the smart card. These three channels are identical. The first side of the bidirectional level shifter dropping Low (falling edge) becomes the driver side until the level shifter enters again in the idle state pulling High CRD_IO and I/Ouc.

Passive 11 kΩ pull−up resistors have been internally integrated on each terminal of the bidirectional channel. In addition with these pull−up resistors, an active pull−up circuit provides a fast charge of the stray capacitance.

The current to and from the card I/O lines is limited internally to 15 mA and the maximum frequency on these lines is 1 MHz.

STANDBY MODE

After a Power−on reset, the circuit enters the standby mode. A minimum number of circuits are active while waiting for the microcontroller to start a session:

- All card contacts are inactive
- Pins I/Ouc, AUX1uc and AUX2uc are in the high−impedance state (11 kΩ pull−up resistor to V_{DD})
- Card pins are inactive and pulled Low
- Supply Voltage monitoring is active
- The internal DC/DC converter oscillator is running.

POWER−UP

In the standby mode the microcontroller can check the presence of a card using the signals $\overline{INT}$ and $\overline{CMDVCC}$ as shown in Table 2:

Table 2. Card Presence State

$\overline{INT}$	$\overline{CMDVCC}$	State
HIGH	HIGH	Card present
LOW	HIGH	Card not present

If a card is detected present ($\overline{CRD_PRES}$ or CRD_PRES active) the controller can start a card session by pulling $\overline{CMDVCC}$ Low. Card activation is run (t0, Figure 5). This Power−Up Sequence makes sure all the card related signals are LOW during the CRD_V_{CC} positive going slope. These lines are validated when CRD_V_{CC} is stable and above the minimum voltage specified. When the CRD_V_{CC} voltage reaches the programmed value (3.0 V or 5.0 V), the circuit activates the card signals according to the following sequence (Figure 5):

- CRD_V_{CC} is powered−up at its nominal value (t1)
- I/O, AUX1 and AUX2 lines are activated (t2)
- Then Clock channel is activated and the clock signal is applied to the card (t3)
- Finally the Reset level shifter is enabled (t4)

Share Feedback
Your Opinion Matters

The clock can also be applied to the card using a RSTIN mode allowing controlling the clock starting by setting RSTIN Low (Figure 4). Before running the activation sequence, that is before setting Low $\overline{\text{CMDVCC}}$ RSTIN is set High. In these initial conditions CRD_CLK starts when RSTIN is pulled Low. This allows a precise count of clock pulses before toggling CRD_RST High for ATR (Answer To Reset) request.

The internal activation sequence activates the different channels according to a specific hardware built−it sequencing internally defined but at the end the actual activation sequencing is the responsibility of the application software and can be redefined by the micro−controller to comply with the different standards and the different ways the standards manage this activation (for example light differences exist between the EMV and the ISO7816 standards).

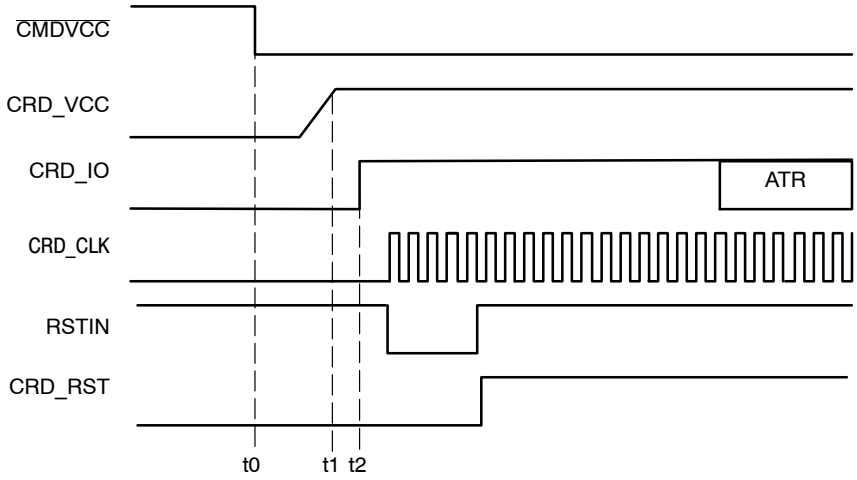

Figure 4. Activation Sequence − RSTIN mode (RSTIN Starting High)

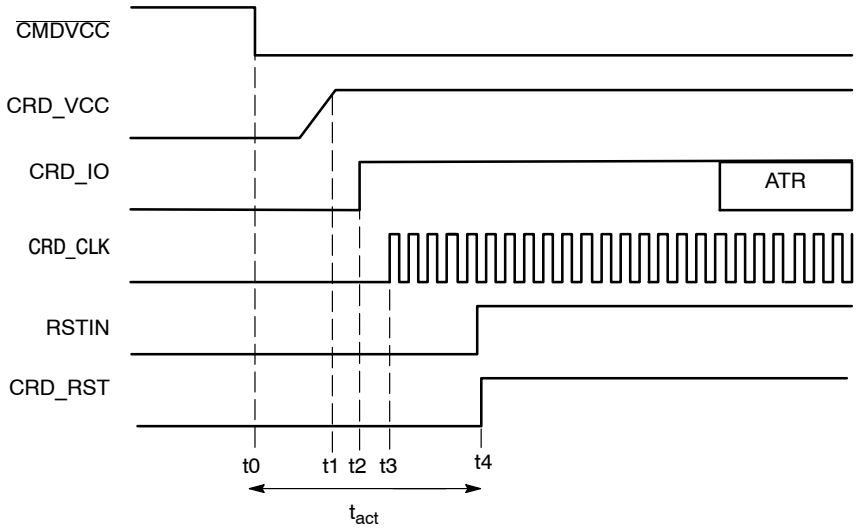

Figure 5. Activation Sequence − Normal Mode

Share Feedback
Your Opinion Matters

POWER−DOWN

When the communication session is completed the NCN8024 runs a deactivation sequence by setting High $\overline{\text{CMDVCC}}$. The below power down sequence is executed:

- CRD_RST is forced to Low
- CRD_CLK is set Low 12 μs after CRD_RST.
- CRD_IO, CRD_AUX1 and CRD_AUX2 are pulled Low
- Finally CRD_V_{CC} supply can be shut−off.

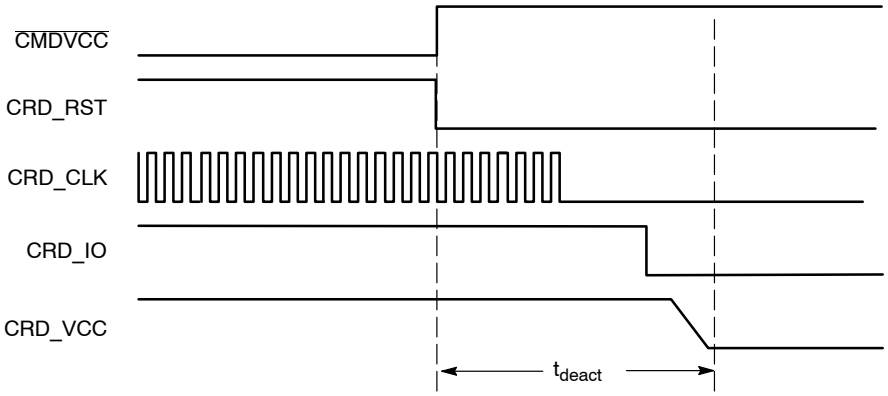

Figure 6. Deactivation Sequence

FAULT DETECTION

In order to protect both the interface and the external smart card, the NCN8024 provides security features to prevent failures or damages as depicted here after.

- Card extraction detection
- V_{DD} under voltage detection
- Short−circuit or overload on CRD_V_{CC}
- Card pin current limitation: in the case of a short circuit to ground. No feedback is provided to the external MPU.
- DC/DC operation: the internal circuit continuously senses the CRD_V_{CC} voltage (in the case of either over or under voltage situation).
- DC/DC operation: under−voltage detection on V_{DDP} or overload on VUP
- Overheating

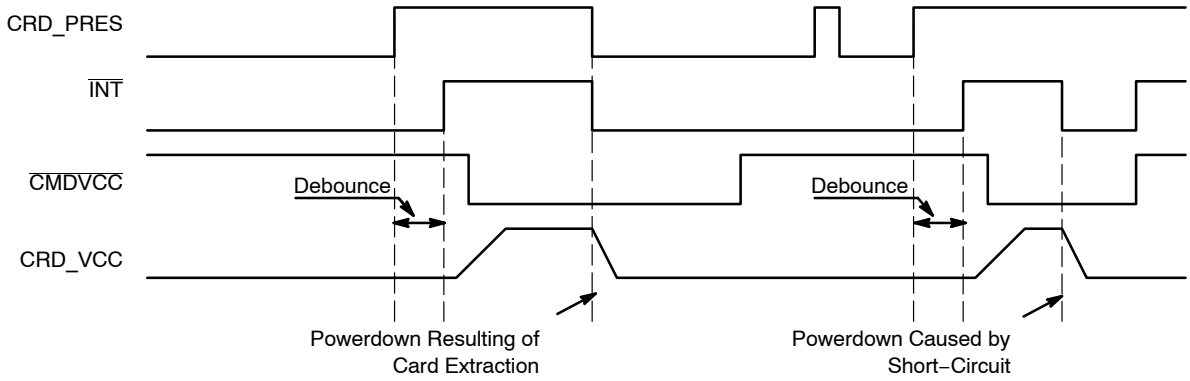

Figure 7. Fault Detection and Interrupt Management

Interrupt Pin Management:

A card session is opened by toggling $\overline{\text{CMDVCC}}$ High to Low.

Before a card session, $\overline{\text{CMDVCC}}$ is supposed to be in a High position. $\overline{\text{INT}}$ is Low if no card is present in the card connector (Normally open or normally closed type). $\overline{\text{INT}}$ is High if a card is present. If a card is inserted ($\overline{\text{INT}}$ = High) and if V_{DD} drops below the UVLO threshold then $\overline{\text{INT}}$ pin drops Low immediately. It turns back High when V_{DD} increases again over the UVLO limit (including hysteresis), a card being still present.

During a card session, $\overline{\text{CMDVCC}}$ is Low and $\overline{\text{INT}}$ pin goes Low when a fault is detected. In that case a deactivation is immediately and automatically performed (see Figure 6). When the microcontroller resets $\overline{\text{CMDVCC}}$ to High it can sense the $\overline{\text{INT}}$ level again after having got completed the deactivation.

As illustrated by Figure 7 the device has a debounce timer of 8 ms typical duration. When a card is inserted, output $\overline{\text{INT}}$ goes High only at the end of the debounce time. When the card is removed a deactivation sequence is automatically and immediately performed and $\overline{\text{INT}}$ goes Low.

Share Feedback
Your Opinion Matters

ESD PROTECTION

The NCN8024 includes devices to protect the pins against the ESD spikes voltages. To cope with the different ESD voltages developed across these pins, the built in structures have been designed to handle either 2 kV, when related to the micro controller side, or 8 kV when connected with the external contacts (HBM model). Practically, the CRD_RST, CRD_CLK, CRD_IO, CRD_AUX1, CRD_AUX2, CRD_PRES and $\overline{\text{CRD_PRES}}$ pins can sustain 8 kV. The CRD_VCC pin has the same ESD protection and can source up to 75 mA continuously, the absolute maximum current being internally limited with a max at 150 mA. The CRD_VCC current limit depends on V_{DDP} and CRD_VCC.

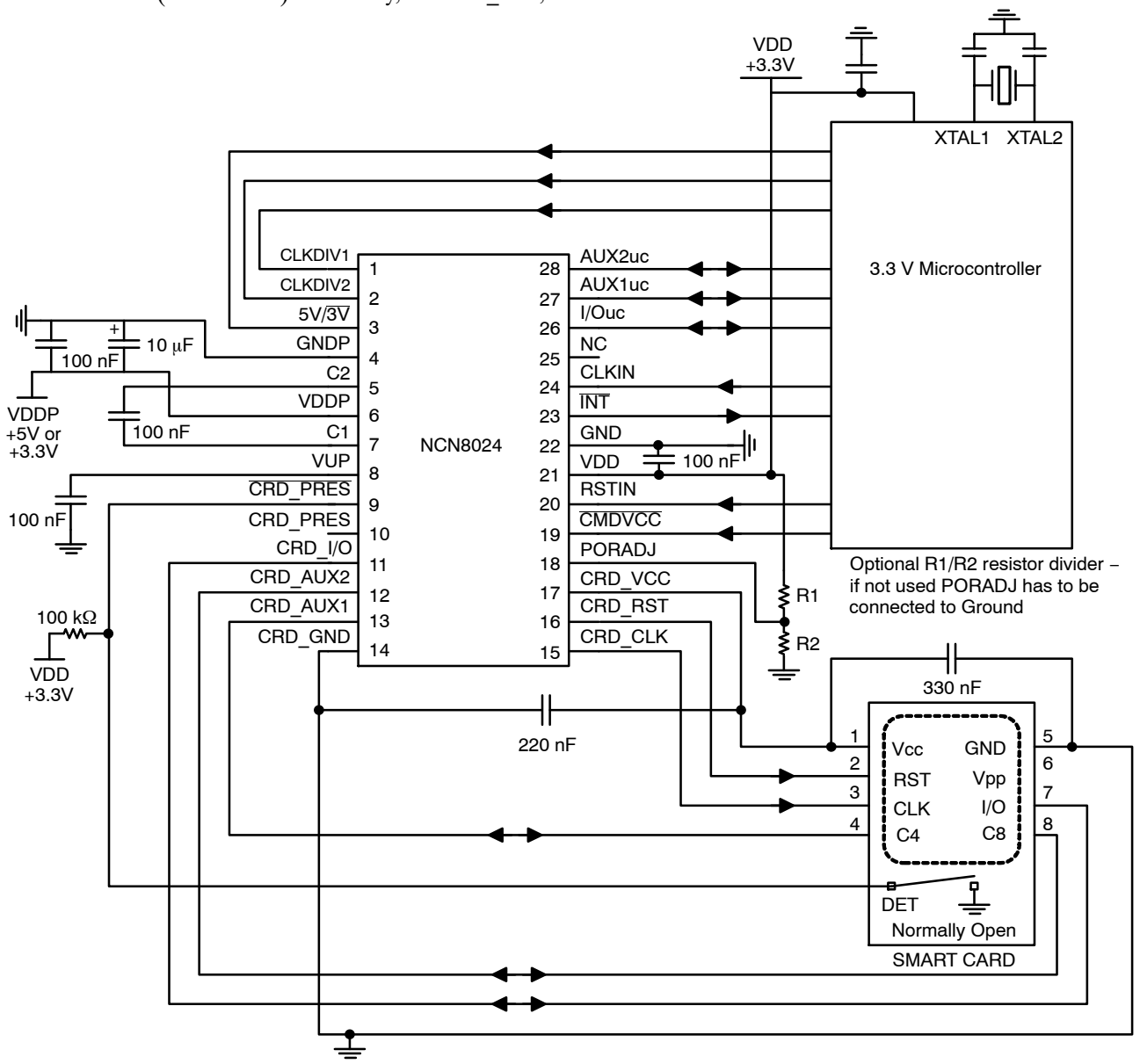

Figure 8. Application Schematic

ORDERING INFORMATION

Device	Package	Shipping†
NCN8024DWR2G	SOIC−28 (Pb−Free)	1000 / Tape & Reel
NCN8024DTBR2G*	TSSOP−28 (Pb−Free)	2500 / Tape & Reel

†For information on tape and reel specifications, including part orientation and tape sizes, please refer to our Tape and Reel Packaging Specifications Brochure, BRD8011/D.
*Consult Sales Office

Share Feedback
Your Opinion Matters

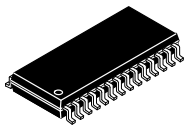

SCALE 1:1

SOIC−28 WB
CASE 751F
ISSUE J

DATE 23 SEP 2015

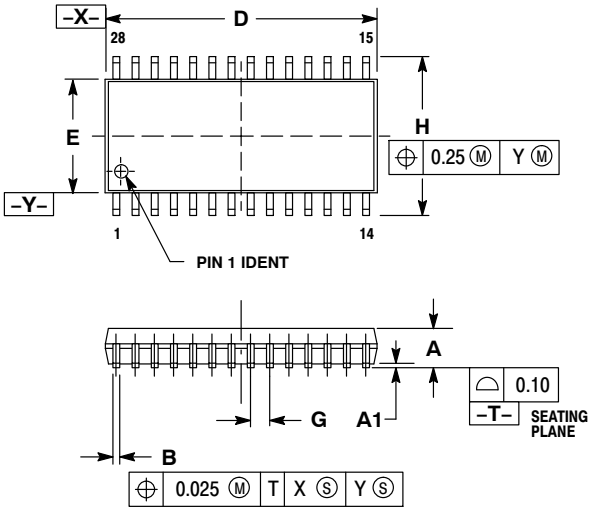

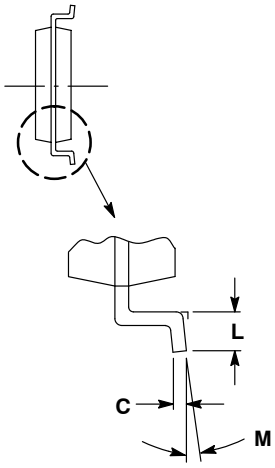

NOTES:
1. DIMENSIONING AND TOLERANCING PER ANSI Y14.5M, 1982.
2. CONTROLLING DIMENSION: MILLIMETER.
3. DIMENSIONS D AND E DO NOT INCLUDE MOLD PROTRUSION
4. MAXIMUM MOLD PROTRUSION 0.15 PER SIDE.
5. DIMENSION B DOES NOT INCLUDE DAMBAR PROTRUSION. ALLOWABLE DAMBER PR5OTRUSION SHALL NOT BE 0.13 TOTATL IN EXCESS OF B DIMENSION AT MAXIMUM MATERIAL CONDITION.

	MILLIMETERS	
DIM	MIN	MAX
A	2.35	2.65
A1	0.13	0.29
B	0.35	0.49
C	0.23	0.32
D	17.80	18.05
E	7.40	7.60
G	1.27 BSC	
H	10.05	10.55
L	0.41	0.90
M	0 °	8 °

RECOMMENDED SOLDERING FOOTPRINT*

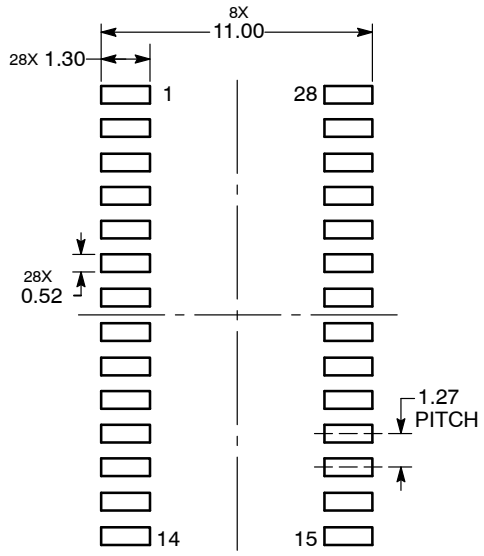

DIMENSIONS: MILLIMETERS

*For additional information on our Pb−Free strategy and soldering details, please download the **onsemi** Soldering and Mounting Techniques Reference Manual, SOLDERRM/D.

GENERIC MARKING DIAGRAM*

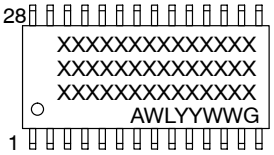

XXXXX = Specific Device Code
A = Assembly Location
WL = Wafer Lot
Y = Year
WW = Work Week
G = Pb−Free Package

*This information is generic. Please refer to device data sheet for actual part marking. Pb−Free indicator, “G” or microdot “▪”, may or may not be present. Some products may not follow the Generic Marking.

DOCUMENT NUMBER:	**98ASB42345B**	Electronic versions are uncontrolled except when accessed directly from the Document Repository. Printed versions are uncontrolled except when stamped “CONTROLLED COPY” in red.
DESCRIPTION:	**SOIC−28 WIDE BODY**	**PAGE 1 OF 1**

onsemi and onsemi are trademarks of Semiconductor Components Industries, LLC dba **onsemi** or its subsidiaries in the United States and/or other countries. **onsemi** reserves the right to make changes without further notice to any products herein. **onsemi** makes no warranty, representation or guarantee regarding the suitability of its products for any particular purpose, nor does **onsemi** assume any liability arising out of the application or use of any product or circuit, and specifically disclaims any and all liability, including without limitation special, consequential or incidental damages. **onsemi** does not convey any license under its patent rights nor the rights of others.



SCALE 1:1

TSSOP28
CASE 948AA
ISSUE A

DATE 26 OCT 2011

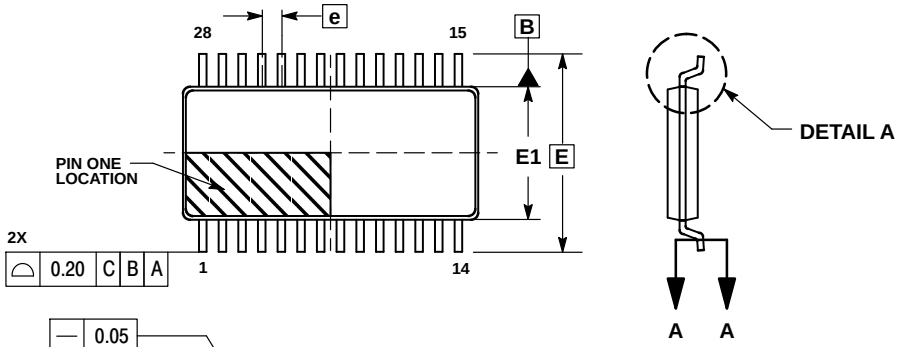

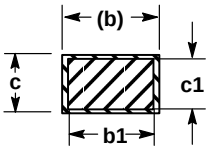

SECTION A−A

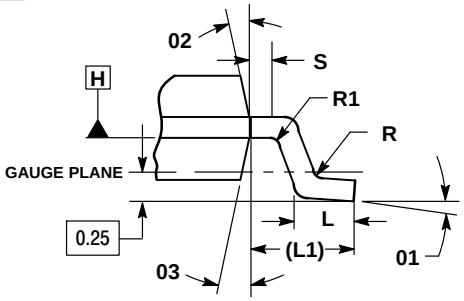

DETAIL A

NOTES:
1. DIMENSIONS AND TOLERANCING PER ASME Y14.5M, 1994.
2. DIMENSIONS IN MILLIMETERS.
3. DIMENSION b DOES NOT INCLUDE DAMBAR PROTRUSION. ALLOWABLE DAMBAR PROTRUSION SHALL BE 0.08 MM TOTAL IN EXCESS OF THE “b” DIMENSION AT MAXIMUM MATERIAL CONDITION.
4. DATUMS A AND B TO BE DETERMINED AT DATUM PLANE H.

	MILLIMETERS	
DIM	MIN	MAX
A	−−−	1.20
A1	0.05	0.15
A2	0.80	1.05
b	0.19	0.30
b1	0.19	0.25
c	0.09	0.20
c1	0.09	0.16
D	9.60	9.80
E	6.40 BSC	
E1	4.30	4.50
e	0.65 BSC	
L	0.45	0.75
L1	1.00 REF	
R	0.09	−−−
R1	0.09	−−−
S	0.20	−−−
01	0 °	8 °
02	12 °REF	
03	12 °REF	

RECOMMENDED SOLDERING FOOTPRINT

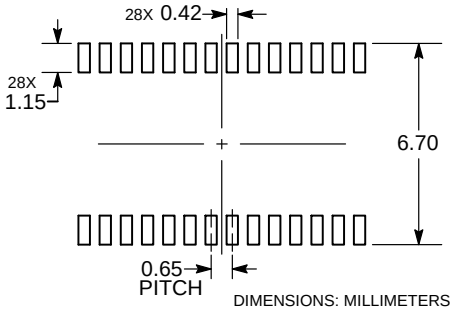

DIMENSIONS: MILLIMETERS

GENERIC MARKING DIAGRAM*

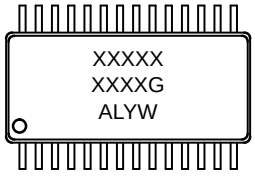

XXXXX = Specific Device Code
A = Assembly Location
L = Wafer Lot
Y = Year
W = Work Week
G = Pb−Free Package

*This information is generic. Please refer to device data sheet for actual part marking.

DOCUMENT NUMBER:	**98AON13023D**	Electronic versions are uncontrolled except when accessed directly from the Document Repository. Printed versions are uncontrolled except when stamped “CONTROLLED COPY” in red.	
DESCRIPTION:	**28 LEAD TSSOP, 9.7X4.4X1.0 MM, 0.65 PITCH**		**PAGE 1 OF 1**

onsemi and onsemi are trademarks of Semiconductor Components Industries, LLC dba **onsemi** or its subsidiaries in the United States and/or other countries. **onsemi** reserves the right to make changes without further notice to any products herein. **onsemi** makes no warranty, representation or guarantee regarding the suitability of its products for any particular purpose, nor does **onsemi** assume any liability arising out of the application or use of any product or circuit, and specifically disclaims any and all liability, including without limitation special, consequential or incidental damages. **onsemi** does not convey any license under its patent rights nor the rights of others.

onsemi, , and other names, marks, and brands are registered and/or common law trademarks of Semiconductor Components Industries, LLC dba "**onsemi**" or its affiliates and/or subsidiaries in the United States and/or other countries. **onsemi** owns the rights to a number of patents, trademarks, copyrights, trade secrets, and other intellectual property. A listing of **onsemi**'s product/patent coverage may be accessed at www.onsemi.com/site/pdf/Patent−Marking.pdf. **onsemi** reserves the right to make changes at any time to any products or information herein, without notice. The information herein is provided "as−is" and **onsemi** makes no warranty, representation or guarantee regarding the accuracy of the information, product features, availability, functionality, or suitability of its products for any particular purpose, nor does **onsemi** assume any liability arising out of the application or use of any product or circuit, and specifically disclaims any and all liability, including without limitation special, consequential or incidental damages. Buyer is responsible for its products and applications using **onsemi** products, including compliance with all laws, regulations and safety requirements or standards, regardless of any support or applications information provided by **onsemi**. "Typical" parameters which may be provided in **onsemi** data sheets and/or specifications can and do vary in different applications and actual performance may vary over time. All operating parameters, including "Typicals" must be validated for each customer application by customer's technical experts. **onsemi** does not convey any license under any of its intellectual property rights nor the rights of others. **onsemi** products are not designed, intended, or authorized for use as a critical component in life support systems or any FDA Class 3 medical devices or medical devices with a same or similar classification in a foreign jurisdiction or any devices intended for implantation in the human body. Should Buyer purchase or use **onsemi** products for any such unintended or unauthorized application, Buyer shall indemnify and hold **onsemi** and its officers, employees, subsidiaries, affiliates, and distributors harmless against all claims, costs, damages, and expenses, and reasonable attorney fees arising out of, directly or indirectly, any claim of personal injury or death associated with such unintended or unauthorized use, even if such claim alleges that **onsemi** was negligent regarding the design or manufacture of the part. **onsemi** is an Equal Opportunity/Affirmative Action Employer. This literature is subject to all applicable copyright laws and is not for resale in any manner.

ADDITIONAL INFORMATION

TECHNICAL PUBLICATIONS:
Technical Library: www.onsemi.com/design/resources/technical−documentation
onsemi Website: www.onsemi.com

ONLINE SUPPORT: www.onsemi.com/support
For additional information, please contact your local Sales Representative at www.onsemi.com/support/sales