Half Bridge Gate Driver (Isolated High & Non-Isolated Low)

NCD57201, NCV57201

The NCx57201 is a high voltage gate driver with one non−isolated low side gate driver and one galvanically isolated high or low side gate driver. It can directly drive two IGBTs in a half bridge configuration. Isolated high side driver can be powered with an isolated power supply or with Bootstrap technique from the low side power supply.

The galvanic isolation for the high side gate driver guarantees reliable switching in high power applications for IGBTs that operate up to 800 V, at high dv/dt. The optimized output stages provide a mean of reducing IGBT losses. Its features include two independent inputs, accurate asymmetric UVLOs, and short and matched propagation delays. The NCx57201 operates with its V_{DD}/V_{BS} up to 20 V.

NOTE: x = D or V

Features

- High Peak Output Current (+1.9 A/−2.3 A)
- Low Output Voltage Drop for Enhanced IGBT Conduction
- Floating Channel for Bootstrap Operation up to +800 V
- CMTI up to 100 kV/μs
- Reliable Operation for V_S Negative Swing to −800 V
- V_{DD} & V_{BS} Supply Range up to 20 V
- 3.3 V, 5 V, and 15 V Logic Input
- Asymmetric Under Voltage Lockout Thresholds for High Side and Low Side
- Matched Propagation Delay 90 ns
- Built−in 20 ns Minimum Pulse Width Filter (or Input Noise Filter)
- Non−Inverting Output Signal
- NCV Prefix for Automotive and Other Applications Requiring Unique Site and Control Change Requirements; AEC−Q100 Qualified and PPAP Capable
- This Device is Pb−Free, Halogen Free/BFR Free and is RoHS Compliant

Typical Applications

- Fans, Pumps
- Home Appliances
- Consumer Electronics
- General Purpose Half Bridge Applications
- Automotive Applications

ON Semiconductor®

www.onsemi.com



SOIC−8 NB
CASE 751−07

MARKING DIAGRAM

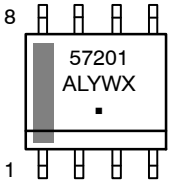

57201	= Specific Device Code
A	= Assembly Location
L	= Wafer Lot
Y	= Year
W	= Work Week
▪	= Pb−Free Package

PIN CONNECTIONS

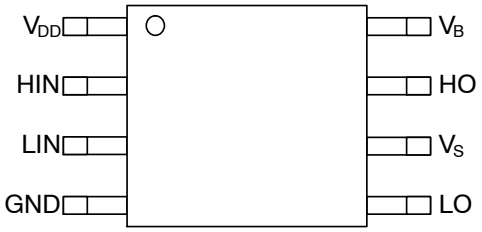

ORDERING INFORMATION

See detailed ordering and shipping information on page 15 of this data sheet.

© Semiconductor Components Industries, LLC, 2020

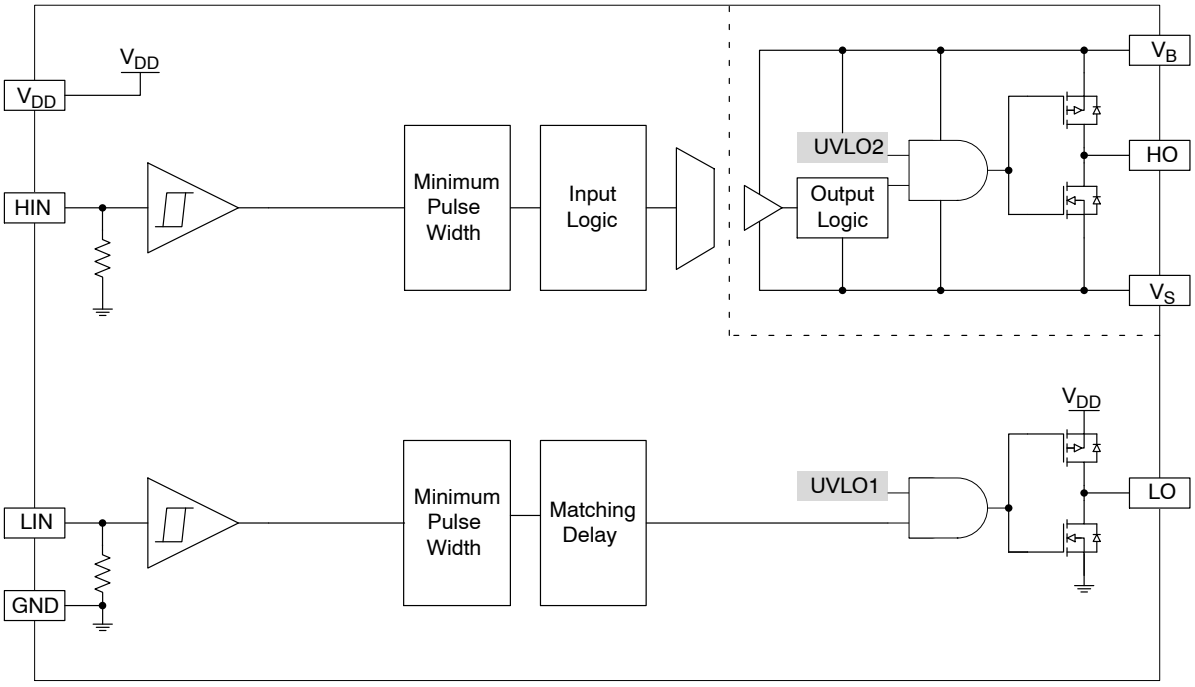

Figure 1. Simplified Block Diagram

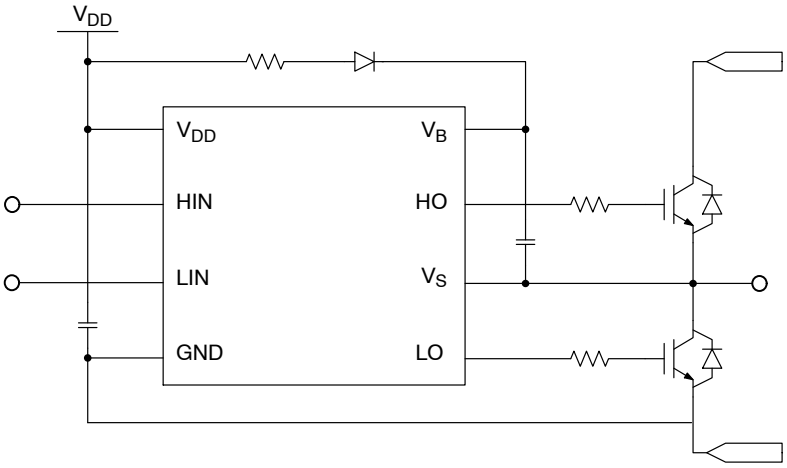

Figure 2. Simplified Application Schematics

Table 1. FUNCTION DESCRIPTION

Pin Name	No.	I/O	Description
V_{DD}	1	Power	Low side and main power supply. A good quality bypassing capacitor is required from this pin to GND and should be placed close to the pins for best results. The under voltage lockout (UVLO) circuit enables the device to operate at power on when a typical supply voltage higher than $V_{UVLO1-OUT-ON}$ is present. Please see Figure 5 for more details. A filter time t_{UVF1} helps to suppress noise on V_{DD} pin.
HIN	2	I	High side non-inverting gate driver input. It has an equivalent pull−down resistor of 125 kΩ to ensure that output is low in the absence of an input signal. A minimum positive or negative going pulse width is required at HIN before HO reacts. It adopts 3.3 V logic signal thresholds for input voltage up to V_{DD}.
LIN	3	I	Low side non-inverting gate driver input. It has an equivalent pull−down resistor of 125 kΩ to ensure that output is low in the absence of an input signal. A minimum positive or negative going pulse width is required at LIN before LO reacts. It adopts 3.3 V logic signal thresholds for input voltage up to V_{DD}.
GND	4	Power	Logic ground and low side driver return.
LO	5	O	Low side driver output that provides the appropriate drive voltage and source/sink current to the IGBT gate. LO is actively pulled low during startup and under UVLO1 condition.
V_S	6	Power	Bootstrap return or high side floating supply offset.
HO	7	O	Galvanically isolated high side driver output that provides the appropriate drive voltage and source/sink current to the IGBT gate. HO is actively pulled low during startup and under UVLOx condition.
V_B	8	Power	Bootstrap or high side floating power supply. A good quality bypassing capacitor is required from this pin to V_S and should be placed close to the pins for best results. The under voltage lockout (UVLO) circuit enables the device to operate at power on when a typical supply voltage higher than $V_{UVLO2-OUT-ON}$ is present. Please see Figure 5 for more details. A filter time t_{UVF2} helps to suppress noise on V_B pin.

Table 2. SAFETY AND INSULATION RATINGS

Symbol	Parameter		Min	Typ	Max	Unit
	Installation Classifications per DIN VDE 0110/1.89 Table 1 Rated Mains Voltage	< 150 V_{RMS}	–	–	–	
		< 300 V_{RMS}	–	–	–	
		< 450 V_{RMS}	–	–	–	
		< 600 V_{RMS}	–	–	–	
		< 1000 V_{RMS}	–	–	–	
CTI	Comparative Tracking Index (DIN IEC 112/VDE 0303 Part 1)		600	–	–	
V_{IORM}	Maximum Working Insulation Voltage		800	–	–	V_{PK}
E_{CR}	External Creepage		4.0	–	–	mm
E_{CL}	External Clearance		4.0	–	–	mm
DTI	Insulation Thickness		8.65	–	–	μm
T_{Case}	Safety Limit Values – Maximum Values in Failure; Case Temperature		150	–	–	°C
$P_{S,INPUT}$	Safety Limit Values – Maximum Values in Failure; Input Power		75	–	–	mW
$P_{S,OUTPUT}$	Safety Limit Values – Maximum Values in Failure; Output Power		1335	–	–	mW
R_{IO}	Insulation Resistance at TS, V_{IO} = 500 V		10^9	–	–	Ω

Table 3. ABSOLUTE MAXIMUM RATINGS (Note 1) Over operating free−air temperature range unless otherwise noted

Parameter	Symbol	Min	Max	Unit
High−Side Offset Voltage (see Figure 2)	V_S	−900	900	V
High−Side Supply Voltage (see Figure 2)	V_B	−900	900	V
Low−Side Supply Voltage	V_{DD}	−0.3	25	V
High−Side Floating Supply Voltage	V_{BS}	−0.3	25	V
High−Side Output Voltage (HO) (see Figure 2)	V_{HO}	V_S−0.3	V_{BS}+0.3	V
Low−Side Output Voltage (LO)	V_{LO}	−0.3	V_{DD}+0.3	V
Logic Input Voltage (HIN, LIN)	V_{IN}	−0.3	V_{DD}+0.3	V
Allowable Offset Voltage Slew Rate (see Figure 31)	dV_S/dt	−	±100	V/ns
Maximum Junction Temperature	$T_{J(max)}$	−40	150	°C
Storage Temperature Range	T_{STG}	−65	150	°C
Power Dissipation 1 (Note 2)	P_{D1}	−	0.87	W
Power Dissipation 2 (Note 2)	P_{D2}	−	1.41	W
ESD Capability, Human Body Model (Note 3)	ESD_{HBM}	−	±4	kV
ESD Capability, Charged Device Model (Note 3)	ESD_{CDM}	−	±2	kV
Moisture Sensitivity Level	MSL	−	1	−
Lead Temperature Soldering Reflow (SMD Styles Only), Pb−Free Versions (Note 4)	T_{SLD}	−	260	°C

Stresses exceeding those listed in the Maximum Ratings table may damage the device. If any of these limits are exceeded, device functionality should not be assumed, damage may occur and reliability may be affected.

1. Refer to ELECTRICAL CHARACTERISTICS and APPLICATION INFORMATION for Safe Operating Area.
2. The value is estimated for ambient temperature 25°C and junction temperature 150°C
   P_{D1} for 100 mm^2, 2 oz. copper, 1 surface layer.
   P_{D2} for 100 mm^2, 2 oz. copper, 2 surface layers and 2 internal power plane layers.
   Power dissipation is affected by the PCB design and ambient temperature.
3. This device series incorporates ESD protection and is tested by the following methods:
   ESD Human Body Model tested per AEC−Q100−002 (EIA/JESD22−A114).
   ESD Charged Device Model tested per AEC−Q100−011 (EIA/JESD22−C101).
   Latchup Current Maximum Rating: ≤ 100 mA per JEDEC standard: JESD78, 125°C.
4. For information, please refer to our Soldering and Mounting Techniques Reference Manual, SOLDERRM/D.

Table 4. THERMAL CHARACTERISTICS

Parameter	Conditions	Symbol	Value	Unit
Thermal Resistance, Junction−to−Air	100 mm^2, 1 oz Copper, 1 Surface Layer	$R_{\theta JA}$	167	°C/W
	650 mm^2, 1 oz Copper, 2 Surface Layers and 2 Internal Power Plane Layers		98	

Table 5. RECOMMENDED OPERATING RANGES (Note 5)

Parameter	Symbol	Min	Max	Unit
High−Side Floating Supply Voltage	V_{BS}	V_S+UVLO2	V_S+20	V
High−Side Offset Voltage (see Figure 2)	V_S	−800	800	V
High−Side Output Voltage (HO) (see Figure 2)	V_{HO}	V_S	V_{BS}	V
Low−Side Output Voltage (LO)	V_{LO}	GND	V_{DD}	V
Logic Input Voltage (HIN, LIN)	V_{IN}	GND	V_{DD}	V
Low−Side Supply Voltage	V_{DD}	UVLO1	20	V
Ambient Temperature	T_A	−40	+125	°C

Functional operation above the stresses listed in the Recommended Operating Ranges is not implied. Extended exposure to stresses beyond the Recommended Operating Ranges limits may affect device reliability.

5. Refer to ELECTRICAL CHARACTERISTICS and APPLICATION INFORMATION for Safe Operating Area.

Table 6. ELECTRICAL CHARACTERISTICS V_{DD} = V_{BS} = 15 V.
For typical values T_A = 25°C, for min/max values, T_A is the operating ambient temperature range that applies, unless otherwise noted.

Parameter	Test Conditions	Symbol	Min	Typ	Max	Unit
VOLTAGE SUPPLY						
V_{BS} Supply Under Voltage Output Enabled		$V_{UVLO2-OUT-ON}$	11	11.5	12	V
V_{BS} Supply Under Voltage Output Disabled		$V_{UVLO2-OUT-OFF}$	10	10.5	11	V
V_{BS} Supply Voltage Output Enabled/Disabled Hysteresis		$V_{UVLO2-HYST}$	0.4	1.0	1.2	V
V_{DD} Supply Under Voltage Output Enabled		$V_{UVLO1-OUT-ON}$	12	12.5	13	V
V_{DD} Supply Under Voltage Output Disabled		$V_{UVLO1-OUT-OFF}$	11	11.5	12	V
V_{DD} Supply Voltage Output Enabled/Disabled Hysteresis		$V_{UVLO1-HYST}$	0.5	1.0	1.2	V
Leakage Current Between V_S and GND	V_S = ±800 V, T_A = 25°C V_S = ±800 V, T_A = −40°C to 125°C	I_{HV_LEAK1} I_{HV_LEAK2}	– –	20 –	200 600	nA
Quiescent Current V_{BS} Supply (V_B Only)	HO = Low	I_{QBS1}	–	260	325	μA
Quiescent Current V_{BS} Supply (V_B Only)	HO = High	I_{QBS2}	–	330	440	μA
Quiescent Current V_{DD} Supply (V_{DD} Only)	V_{LIN} = Float, V_{HIN} = 0 V	I_{QDD1}	–	380	440	μA
Quiescent Current V_{DD} Supply (V_{DD} Only)	V_{LIN} = 3.3 V, V_{HIN} = 0 V	I_{QDD2}	–	440	510	μA
Quiescent Current V_{DD} Supply (V_{DD} Only)	V_{LIN} = 0 V, V_{HIN} = 3.3 V	I_{QDD3}	–	2.4	3	mA
LOGIC INPUT						
Low Level Input Voltage		V_{IL}	–	–	0.9	V
High Level Input Voltage		V_{IH}	2.4	–	–	V
Logic “1” Input Bias Current	V_{LIN} = 3.3 V, V_{HIN} = 3.3 V	I_{LIN1+}, I_{HIN1+}	–	25	50	μA
Logic “1” Input Bias Current	V_{LIN} = 20 V, V_{HIN} = 20 V, V_{DD} = V_{BS} = 20 V	I_{LIN2+}, I_{HIN2+}	–	100	150	μA
Logic “0” Input Bias Current	V_{LIN} = 0 V, V_{HIN} = 0 V	I_{LIN-}, I_{HIN-}	–	40	100	nA
DRIVER OUTPUT						
Output Low State	I_{SINK} = 200 mA, T_A = 25°C	V_{OL1}	–	0.2	0.3	V
	I_{SINK} = 200 mA, T_A = −40°C to 125°C	V_{OL2}	–	–	0.5	
Output High State	I_{SOURCE} = 200 mA, T_A = 25°C	V_{OH1}	14.4	14.5	–	V
	I_{SOURCE} = 200 mA, T_A = −40°C to 125°C	V_{OH2}	14	–	–	
Peak Driver Current, Sink (Note 6)	V_{HO} = V_{LO} = 15 V	$I_{PK-SNK1}$	–	2.3	–	A
	V_{HO} = V_{LO} = 9 V (near Miller Plateau)	$I_{PK-SNK2}$	–	2.1	–	
Peak Driver Current, Source (Note 6)	V_{HO} = V_{LO} = 0 V	$I_{PK-SRC1}$	–	1.9	–	A
	V_{HO} = V_{LO} = 9 V (near Miller Plateau)	$I_{PK-SRC2}$	–	1.5	–	

Table 6. ELECTRICAL CHARACTERISTICS V_{DD} = V_{BS} = 15 V.
For typical values T_A = 25°C, for min/max values, T_A is the operating ambient temperature range that applies, unless otherwise noted.

Parameter	Test Conditions	Symbol	Min	Typ	Max	Unit
IGBT SHORT CIRCUIT CLAMPING						
Clamping Voltage (V_{HO} − V_B) / (V_{LO} − V_{DD})	I_{HO} = 100 mA, I_{LO} = 100 mA (pulse test, t_{CLPmax} = 10 μs)	$V_{CLAMP-OUT}$	–	0.8	1.3	V
DYNAMIC CHARACTERISTIC						
HO High Propagation Delay	C_{LOAD} = 1 nF, V_{IH} to 10% of Output Change for PW > 150 ns	$t_{PD-ON-H}$	50	70	110	ns
HO Low Propagation Delay	C_{LOAD} = 1 nF, V_{IL} to 90% of Output Change for PW > 150 ns	$t_{PD-OFF-H}$	50	70	110	ns
Propagation Delay Distortion(HS) (= $t_{PD-ON-H}$ − $t_{PD-OFF-H}$)	PW > 150 ns	$t_{DISTORT-H}$	−25	0	25	ns
LO High Propagation Delay	C_{LOAD} = 1 nF, V_{IH} to 10% of Output Change for PW > 150 ns	$t_{PD-ON-L}$	50	70	110	ns
LO Low Propagation Delay	C_{LOAD} = 1 nF, V_{IL} to 90% of Output Change for PW > 150 ns	$t_{PD-OFF-L}$	50	70	110	ns
Propagation Delay Distortion(LS) (= $t_{PD-ON-L}$ − $t_{PD-OFF-L}$)	PW > 150 ns	$t_{DISTORT-L}$	−25	0	25	ns
High Propagation Delay Distortion between High and Low Sides	PW > 150 ns	$t_{DISTORT-HL-H}$	−25	0	25	ns
Low Propagation Delay Distortion between High and Low Sides	PW > 150 ns	$t_{DISTORT-HL-L}$	−25	0	25	ns
Rise Time (HO) (see Figure 3)	C_{LOAD} = 1 nF, 10% to 90% of Output Change	t_{RISE-H}	–	13	–	ns
Fall Time (HO) (see Figure 3)	C_{LOAD} = 1 nF, 90% to 10% of Output Change	t_{FALL-H}	–	8	–	ns
Rise Time (LO) (see Figure 3)	C_{LOAD} = 1 nF, 10% to 90% of Output Change	t_{RISE-L}	–	13	–	ns
Fall Time (LO) (see Figure 3)	C_{LOAD} = 1 nF, 90% to 10% of Output Change	t_{FALL-L}	–	8	–	ns
Minimum Pulse Width Filtering Time (see Figure 3)	T_A = 25°C	t_{MIN1}, t_{MIN2}	10	–	40	ns
UVLO Fall Delay (HO and LO)		t_{UVF1}, t_{UVF2}	–	1300	–	ns
UVLO Rise Delay (HO and LO)		t_{UVR1}, t_{UVR2}	–	1100	–	ns

Product parametric performance is indicated in the Electrical Characteristics for the listed test conditions, unless otherwise noted. Product performance may not be indicated by the Electrical Characteristics if operated under different conditions.
6. Values based on design and/or characterization.

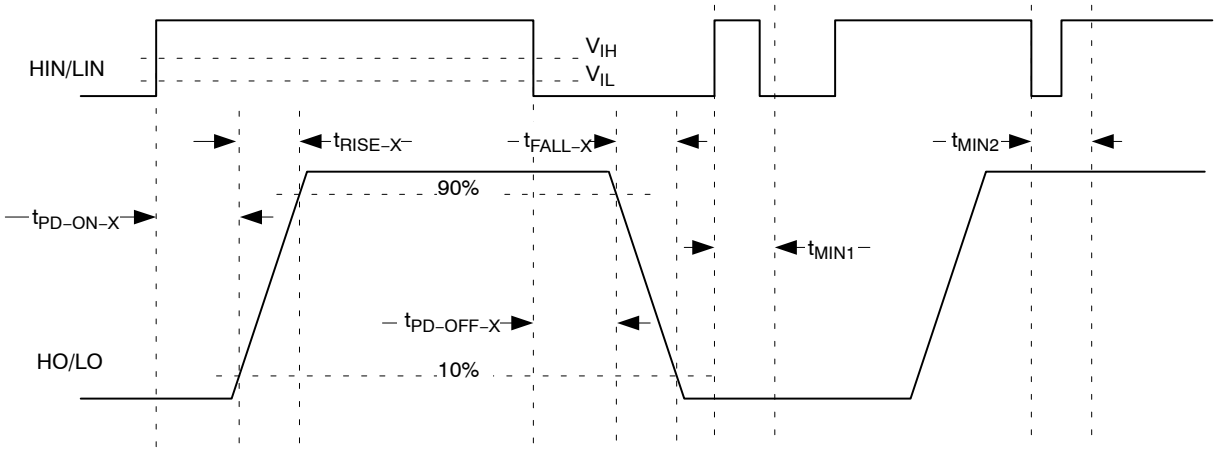

Figure 3. Propagation Delay, Rise and Fall Time

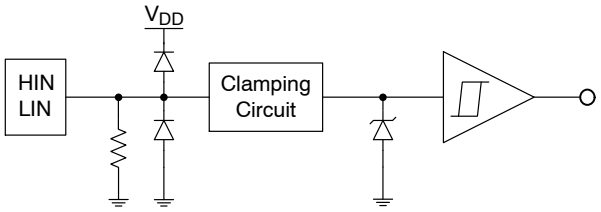

Figure 4. Input Pin Structure

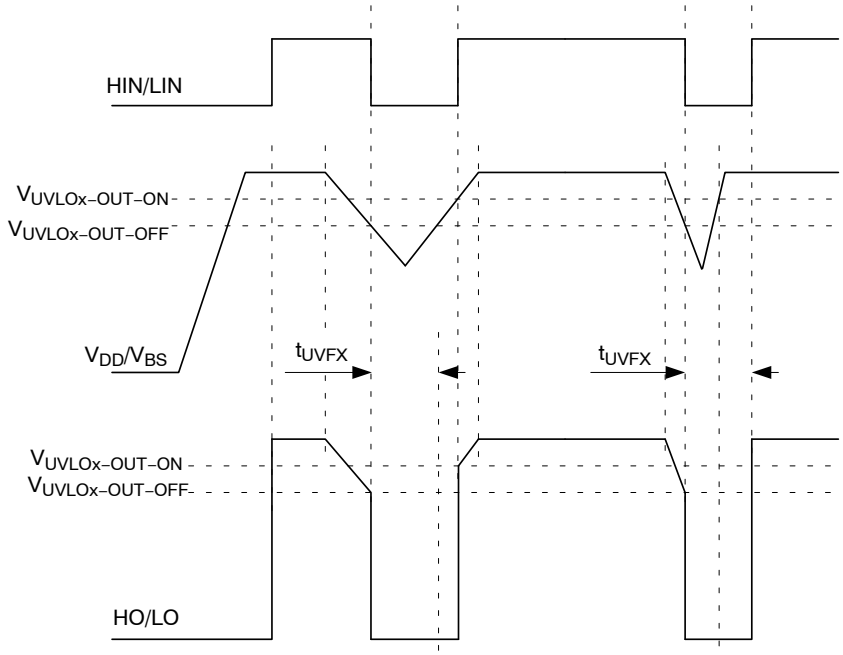

Figure 5. UVLO

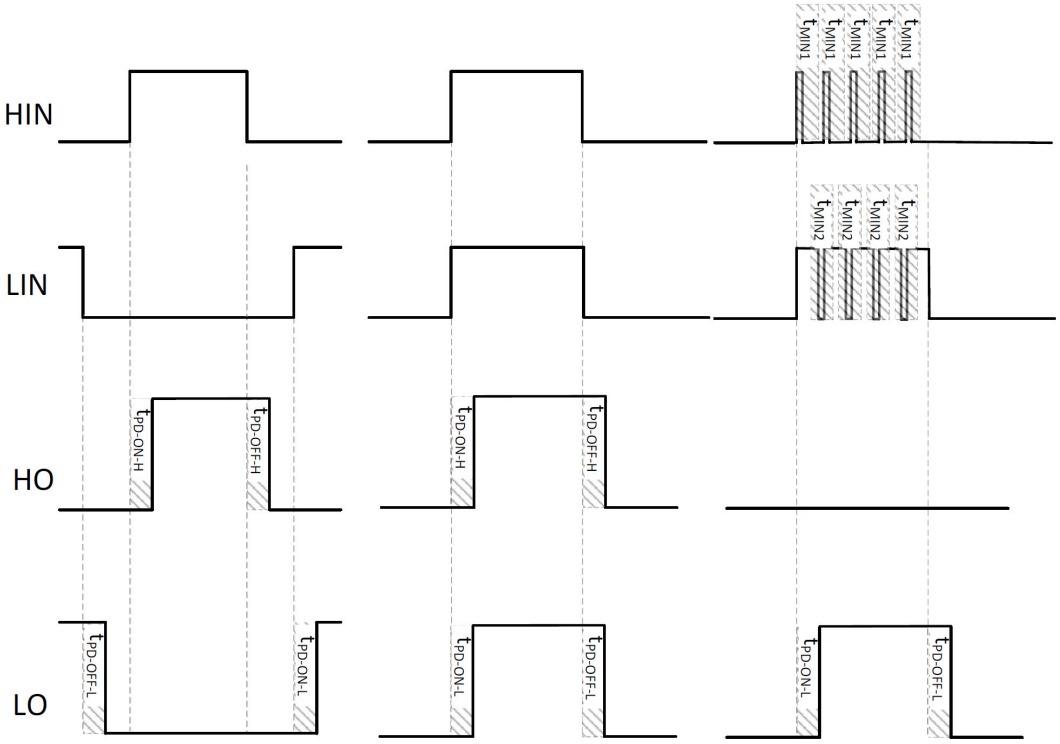

Figure 6. Timing Diagrams

TYPICAL CHARACTERISTICS

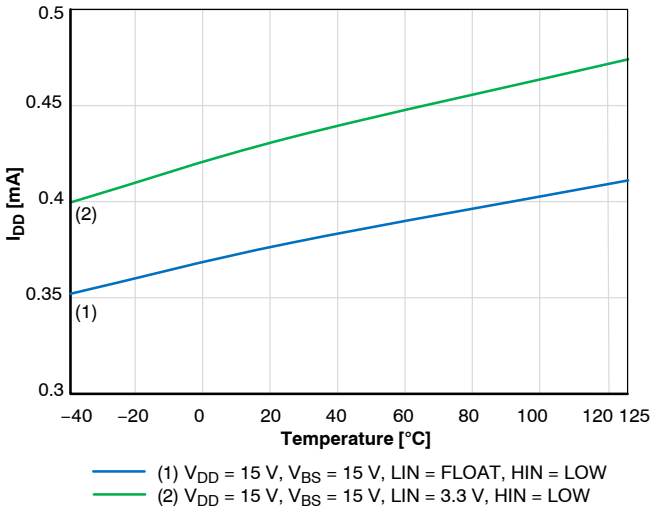

Figure 7. I_{DD} Supply Current V_{DD} = 15 V

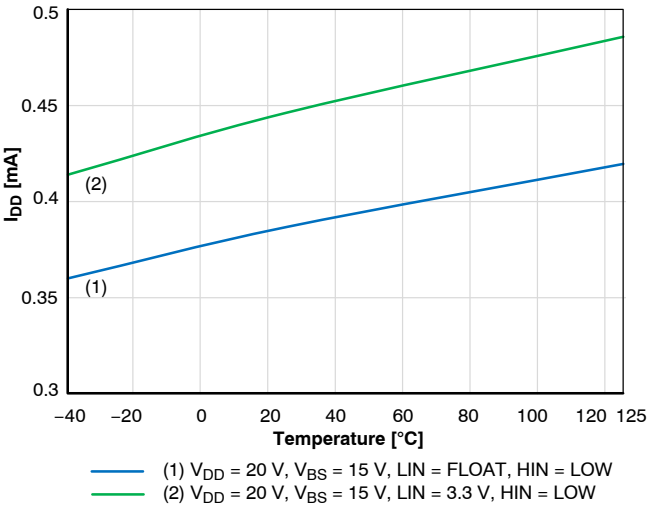

Figure 8. I_{DD} Supply Current V_{DD} = 20 V

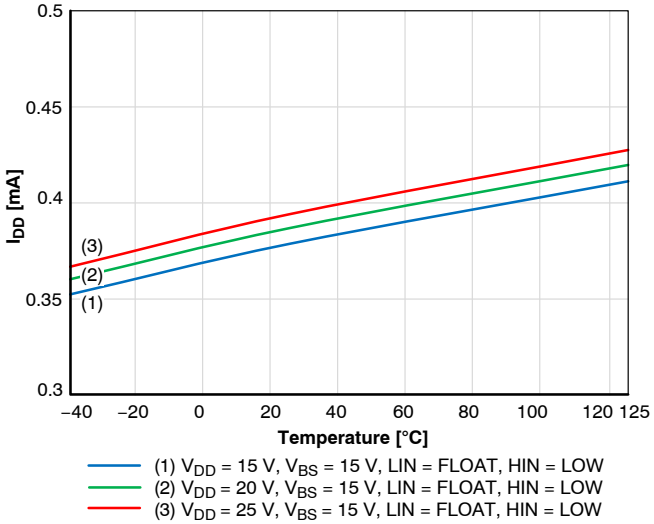

Figure 9. I_{DD} Supply Current V_{DD} = 15–25 V, Input Float

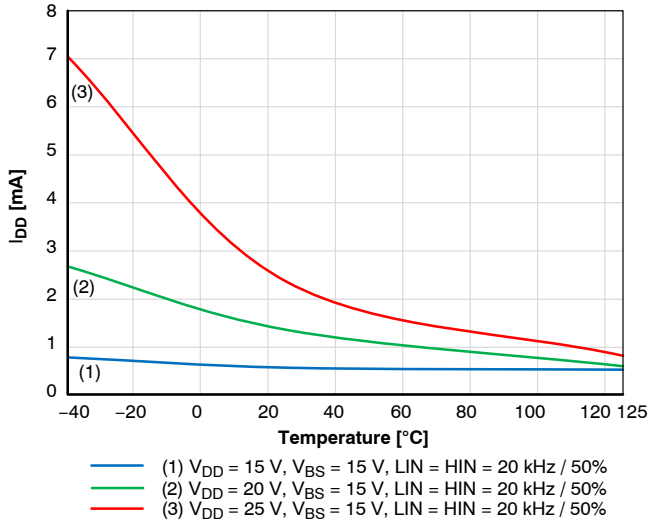

Figure 10. I_{DD} Supply Current V_{DD} = 15–25 V, LIN = HIN = 20 kHz / 50%

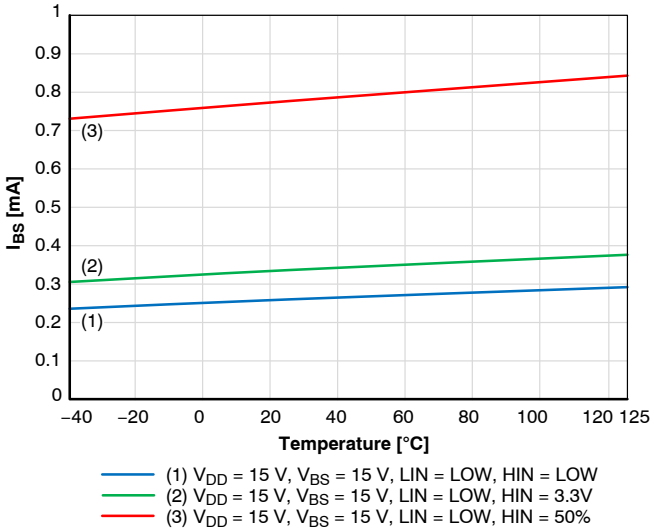

Figure 11. I_{BS} Supply Current V_{BS} = 15 V

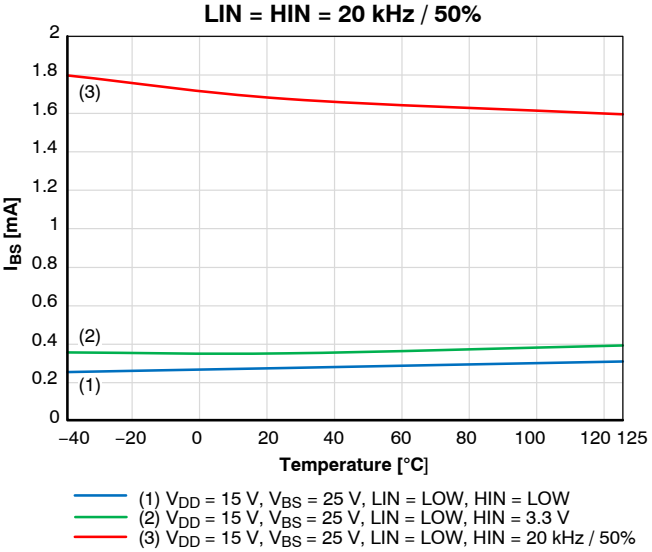

Figure 12. I_{BS} Supply Current V_{BS} = 25 V

TYPICAL CHARACTERISTICS (continued)

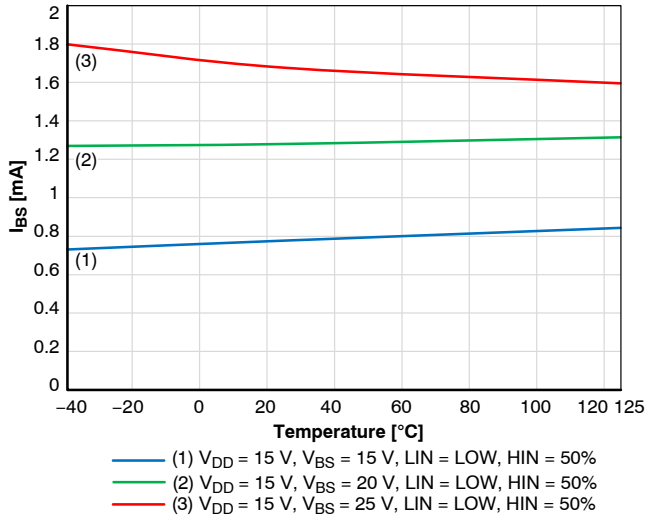

Figure 13. I_{BS} Supply Current V_{BS} = 15–25 V, HIN = 20 kHz / 50%

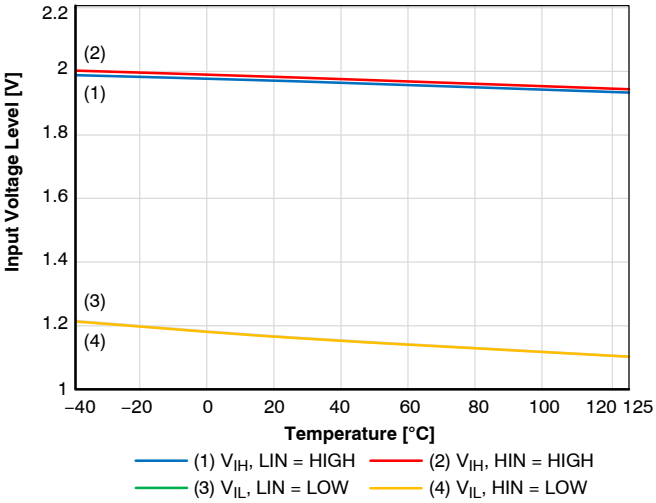

Figure 14. Input Voltage Level

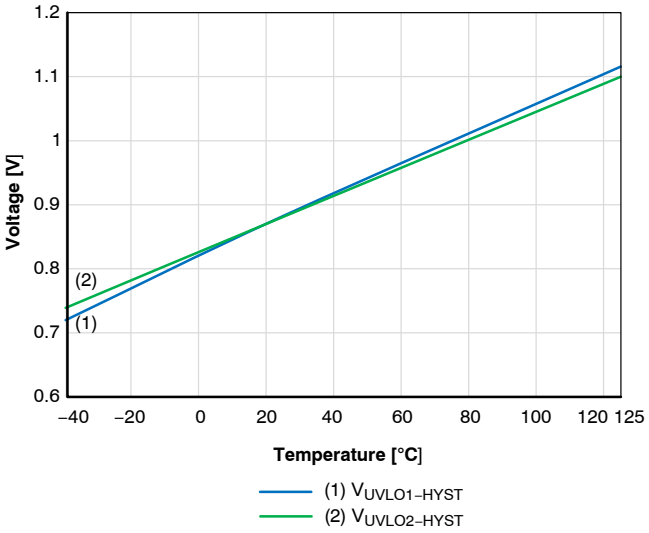

Figure 15. UVLO Hysteresis

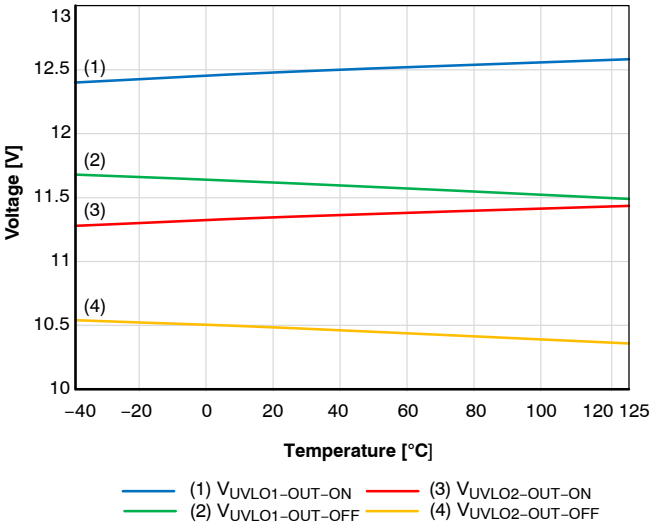

Figure 16. UVLO Threshold Voltage

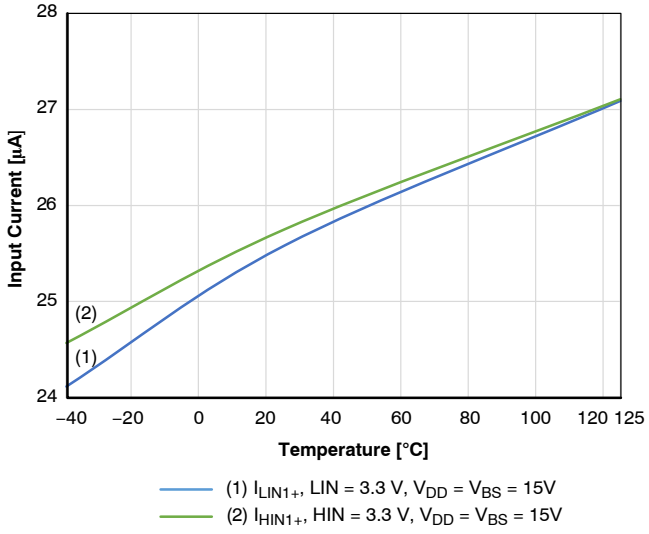

Figure 17. Input Current V_{DD} = V_{BS} = 15 V

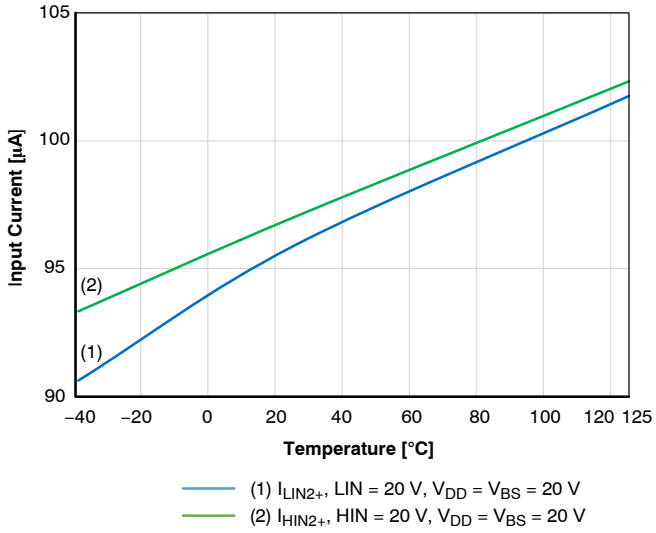

Figure 18. Input Current V_{DD} = V_{BS} = 20 V

TYPICAL CHARACTERISTICS (continued)

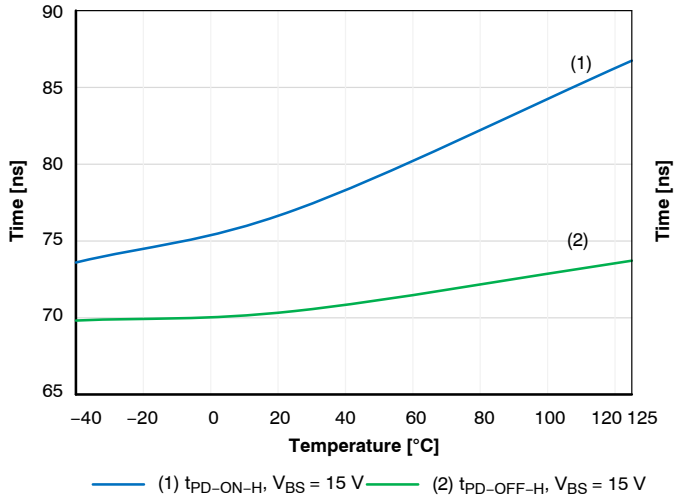

Figure 20. HO Propagation Delay

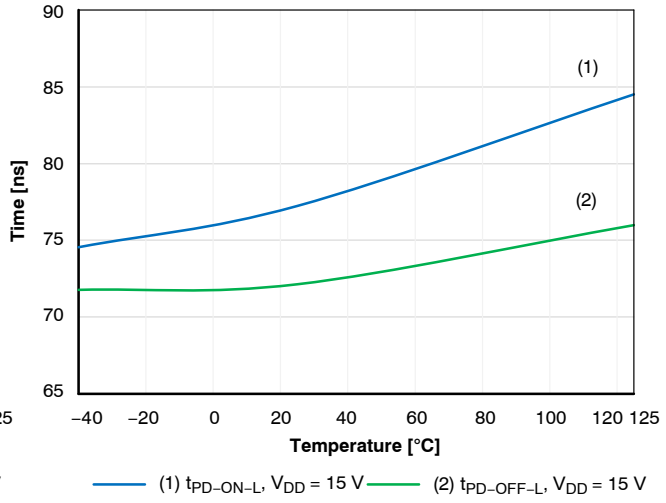

Figure 21. LO Propagation Delay

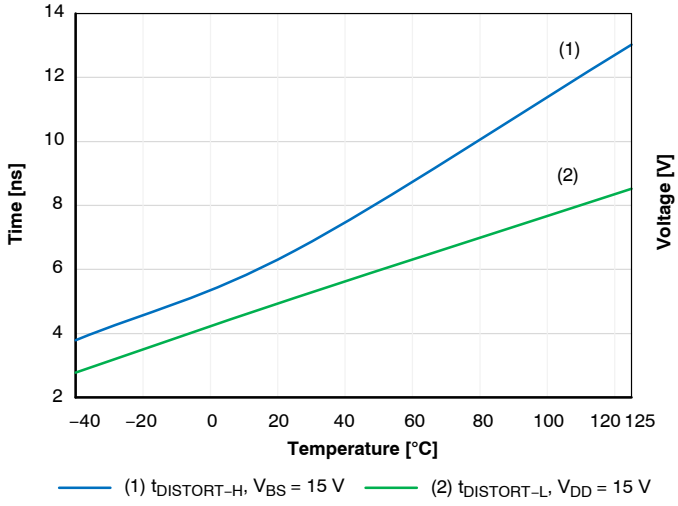

Figure 24. Propagation Delay Distortion

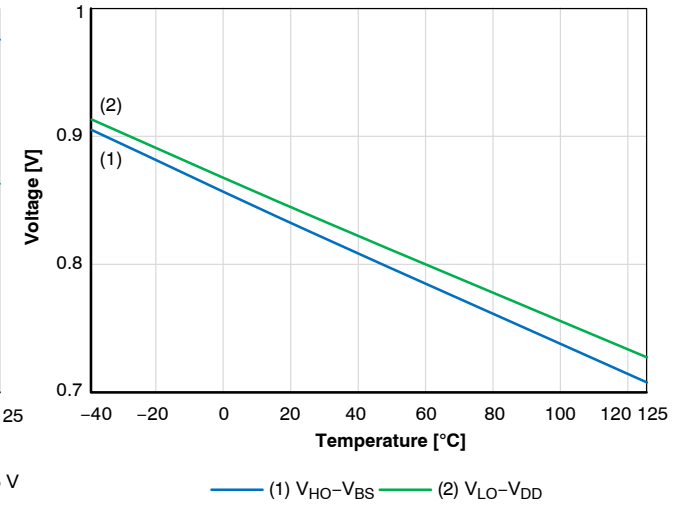

Figure 19. IGBT Short Circuit CLAMP Voltage Drop

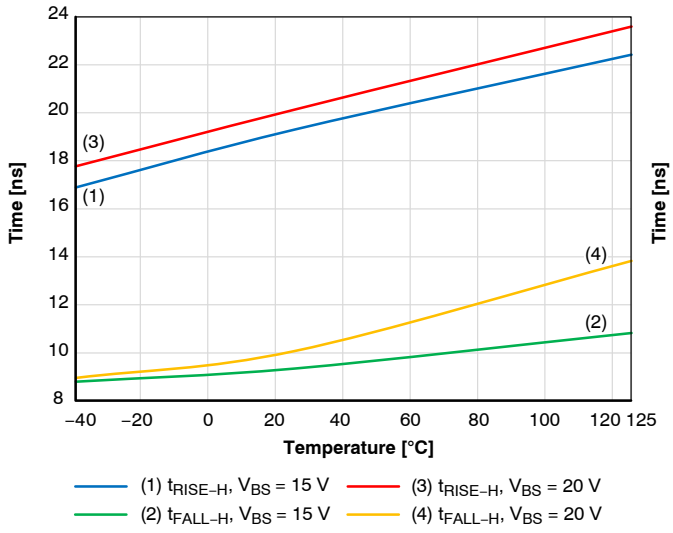

Figure 22. HO Rise – Fall Time

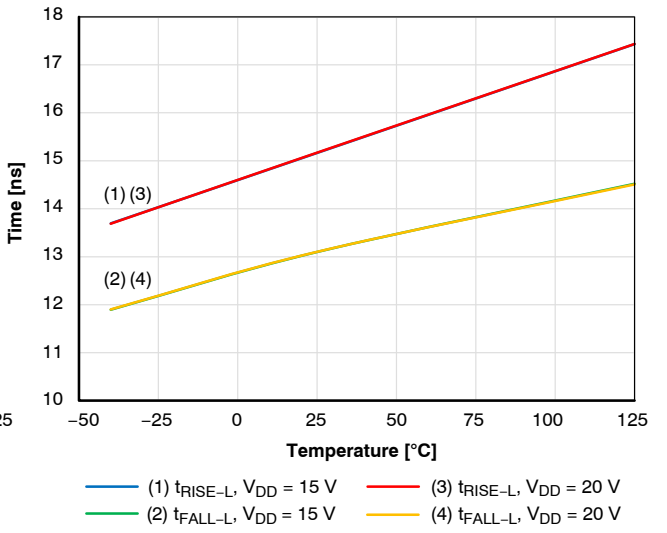

Figure 23. LO Rise – Fall Time

TYPICAL CHARACTERISTICS (continued)

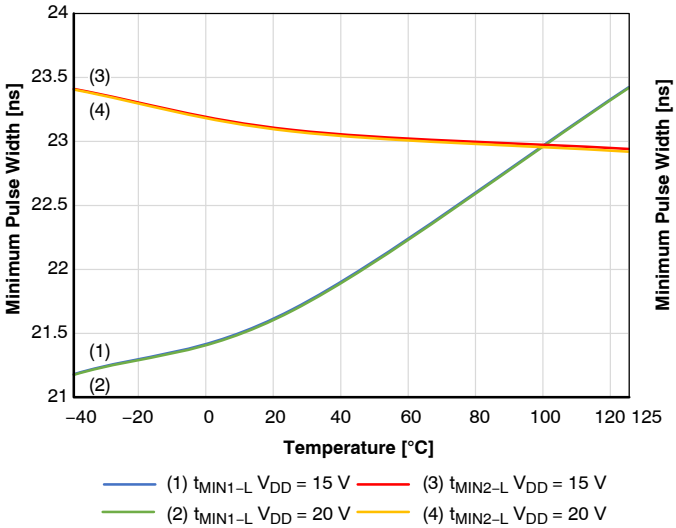

Figure 25. Minimum Pulse Width Filtering Time (LO)

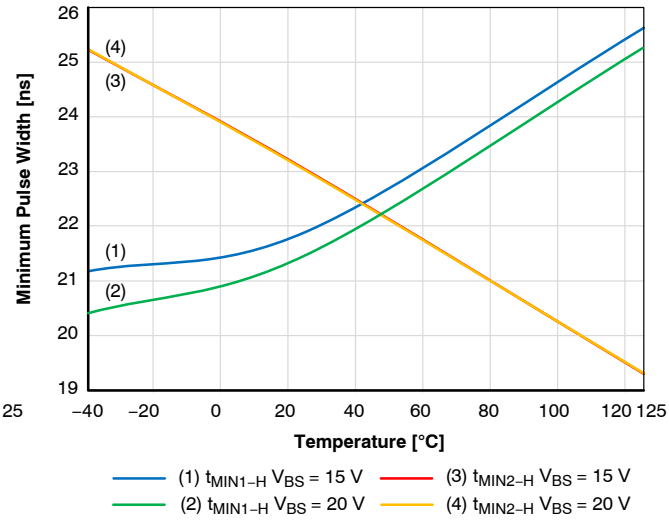

Figure 26. Minimum Pulse Width Filtering Time (HO)

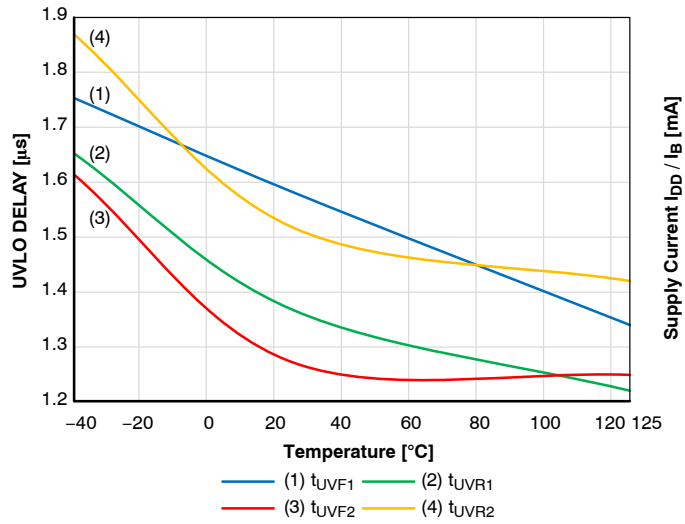

Figure 27. UVLO Delay

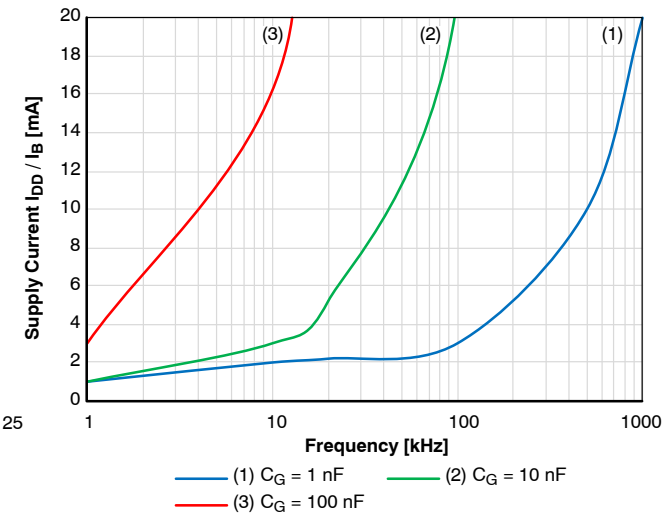

Figure 28. Power Supply Current vs. Switching Frequency (Duty Cycle 50%)

Under Voltage Lockout (UVLO)

UVLO ensures correct switching of IGBT connected to the driver output.

- The IGBT is turned−off, if the supply V_{DD} drops below $V_{UVLO1−OUT−OFF}$ or V_{BS} drops below $V_{UVLO2−OUT−OFF}$
- The driver outputs do not react to their respective input signal HIN or LIN until V_{DD} and V_{BS} rise above their corresponding $V_{UVLOX−OUT_ON}$ level

Power Supply (V_{DD}, V_{BS})

NCx57201 is designed to support unipolar power supply on both individual channels.

For reliable high output current suitable external power capacitors are required. Parallel combination of 100 nF + 4.7 μF ceramic capacitors is optimal for a wide range of applications using IGBT. For reliable driving of IGBT modules (containing several parallel IGBTs) a higher capacitance is required (typically 100 nF + 10 μF). Capacitors should be as close as possible to the driver's power pins.

Power supply of isolated (HO) channel can be provided by an external DC power supply or Bootstrap circuit.

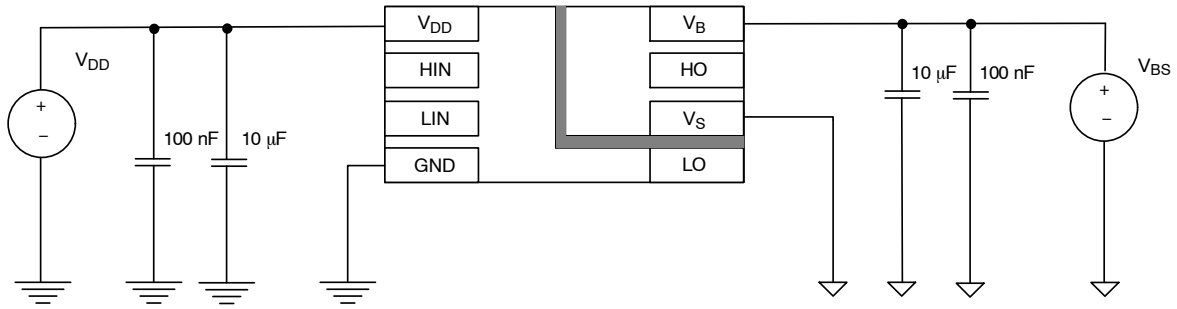

Figure 29. Unipolar Power Supply

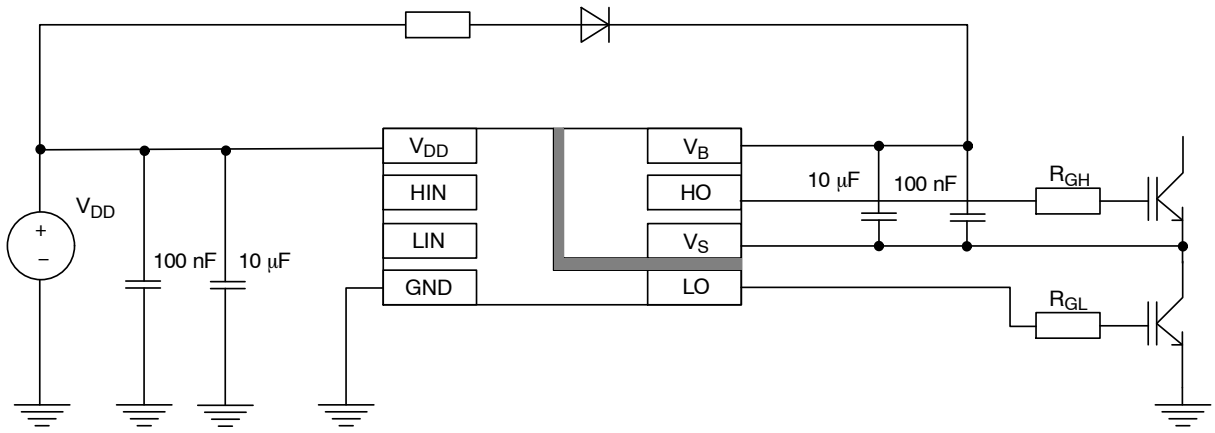

Figure 30. Bootstrap Power Supply

Signal Inputs (HIN, LIN)

Inputs of NCx57201 are active high. Outputs are in phase with inputs signals respecting internal logic (see Figure 5, 6).

WARNING: When the application uses an independent or separate power supply for the control unit on the input side of the driver, all inputs should be protected by a serial resistor (In case of a power failure of the driver, the driver may be damaged due to overloading of the input protection circuits).

Common Mode Transient Immunity (CMTI)

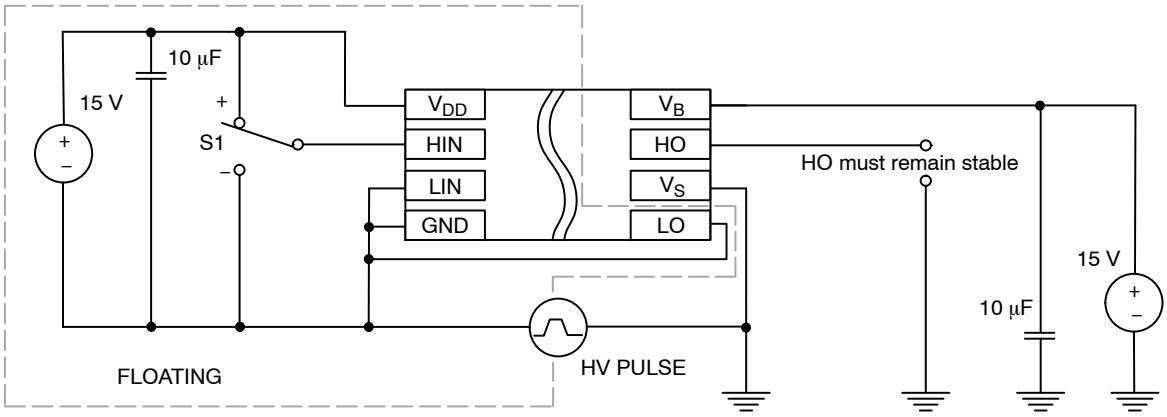

Figure 31. CMTI Test Setup
(Test Conditions: HV PULSE = ±900 V, dV/dt = 1−100 V/ns, V_{DD} = 15 V, V_B = 15 V)

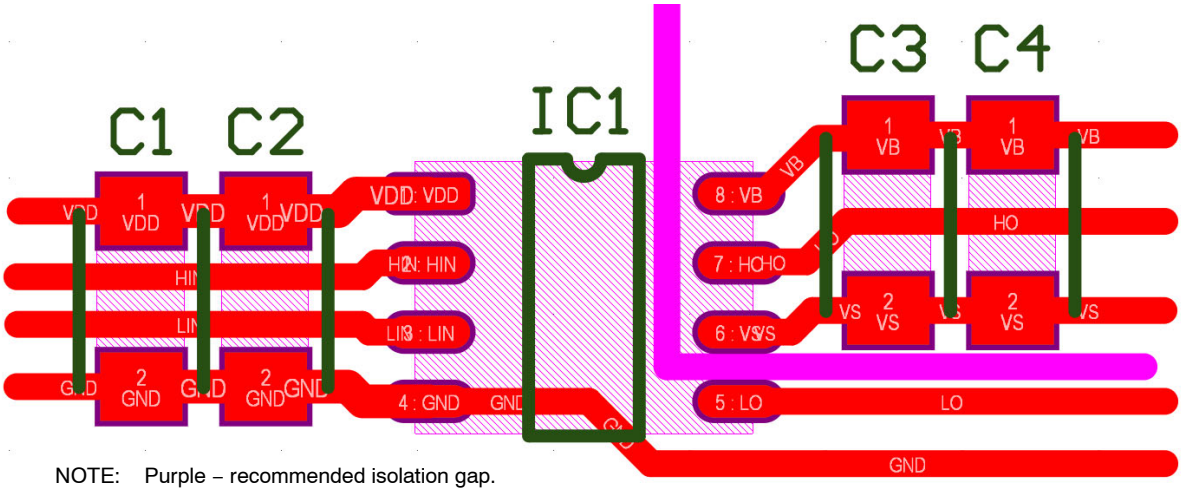

NOTE: Purple − recommended isolation gap.

Figure 32. Recommended Layout

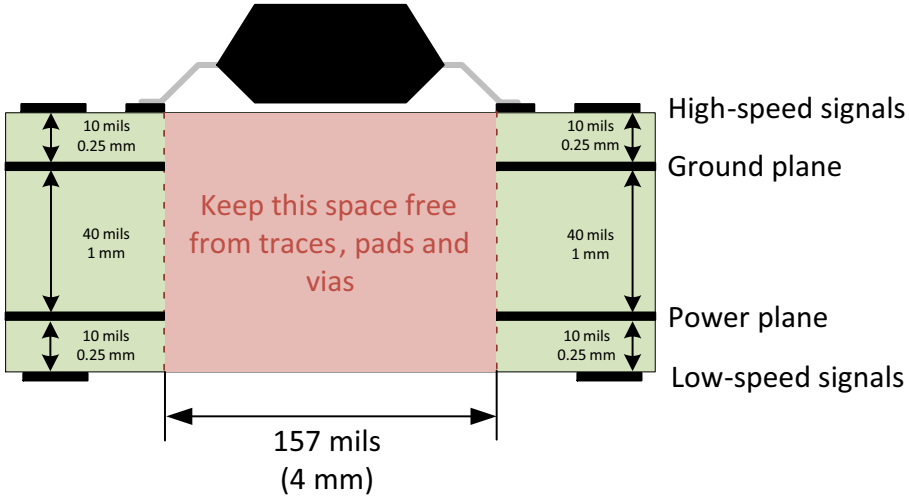

Figure 33. Recommended Layer Stack

ORDERING INFORMATION

Device	Package	Shipping†
NCD57201DR2G	SOIC−8 (Pb−Free)	2500 / Tape & Reel
NCV57201DR2G*	SOIC−8 (Pb−Free)	2500 / Tape & Reel

†For information on tape and reel specifications, including part orientation and tape sizes, please refer to our Tape and Reel Packaging Specifications Brochure, BRD8011/D.

*NCV Prefix for Automotive and Other Applications Requiring Unique Site and Control Change Requirements; AEC−Q100 Qualified and PPAP Capable.



SCALE 1:1

SOIC−8 NB
CASE 751−07
ISSUE AK

DATE 16 FEB 2011

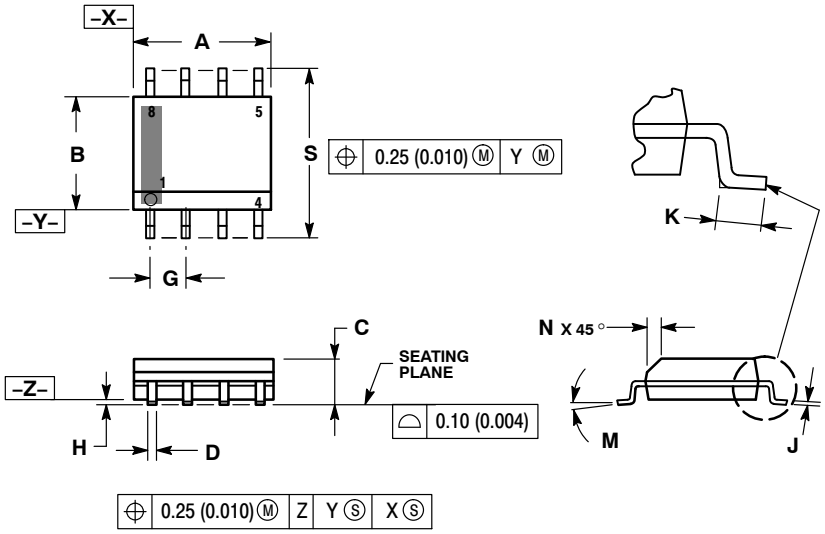

NOTES:
1. DIMENSIONING AND TOLERANCING PER ANSI Y14.5M, 1982.
2. CONTROLLING DIMENSION: MILLIMETER.
3. DIMENSION A AND B DO NOT INCLUDE MOLD PROTRUSION.
4. MAXIMUM MOLD PROTRUSION 0.15 (0.006) PER SIDE.
5. DIMENSION D DOES NOT INCLUDE DAMBAR PROTRUSION. ALLOWABLE DAMBAR PROTRUSION SHALL BE 0.127 (0.005) TOTAL IN EXCESS OF THE D DIMENSION AT MAXIMUM MATERIAL CONDITION.
6. 751−01 THRU 751−06 ARE OBSOLETE. NEW STANDARD IS 751−07.

	MILLIMETERS		INCHES	
DIM	MIN	MAX	MIN	MAX
A	4.80	5.00	0.189	0.197
B	3.80	4.00	0.150	0.157
C	1.35	1.75	0.053	0.069
D	0.33	0.51	0.013	0.020
G	1.27 BSC		0.050 BSC	
H	0.10	0.25	0.004	0.010
J	0.19	0.25	0.007	0.010
K	0.40	1.27	0.016	0.050
M	0°	8°	0°	8°
N	0.25	0.50	0.010	0.020
S	5.80	6.20	0.228	0.244

SOLDERING FOOTPRINT*

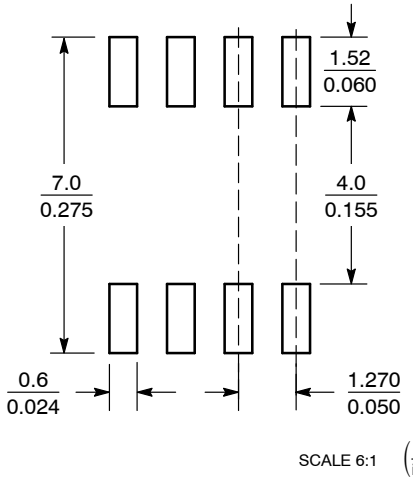

SCALE 6:1 (mm / inches)

*For additional information on our Pb−Free strategy and soldering details, please download the **onsemi** Soldering and Mounting Techniques Reference Manual, SOLDERRM/D.

GENERIC MARKING DIAGRAM*

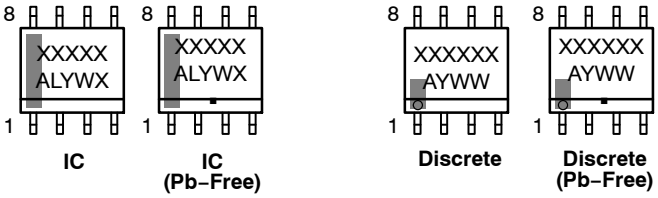

XXXXX = Specific Device Code
A = Assembly Location
L = Wafer Lot
Y = Year
W = Work Week
▪ = Pb−Free Package

XXXXXX = Specific Device Code
A = Assembly Location
Y = Year
WW = Work Week
▪ = Pb−Free Package

*This information is generic. Please refer to device data sheet for actual part marking. Pb−Free indicator, "G" or microdot "▪", may or may not be present. Some products may not follow the Generic Marking.

STYLES ON PAGE 2

DOCUMENT NUMBER:	**98ASB42564B**	Electronic versions are uncontrolled except when accessed directly from the Document Repository. Printed versions are uncontrolled except when stamped "CONTROLLED COPY" in red.	
DESCRIPTION:	**SOIC−8 NB**		**PAGE 1 OF 2**

onsemi and ONSEMI are trademarks of Semiconductor Components Industries, LLC dba **onsemi** or its subsidiaries in the United States and/or other countries. **onsemi** reserves the right to make changes without further notice to any products herein. **onsemi** makes no warranty, representation or guarantee regarding the suitability of its products for any particular purpose, nor does **onsemi** assume any liability arising out of the application or use of any product or circuit, and specifically disclaims any and all liability, including without limitation special, consequential or incidental damages. **onsemi** does not convey any license under its patent rights nor the rights of others.

SOIC−8 NB
CASE 751−07
ISSUE AK

DATE 16 FEB 2011

STYLE 1:
PIN 1. EMITTER
2. COLLECTOR
3. COLLECTOR
4. EMITTER
5. EMITTER
6. BASE
7. BASE
8. EMITTER

STYLE 2:
PIN 1. COLLECTOR, DIE, #1
2. COLLECTOR, #1
3. COLLECTOR, #2
4. COLLECTOR, #2
5. BASE, #2
6. EMITTER, #2
7. BASE, #1
8. EMITTER, #1

STYLE 3:
PIN 1. DRAIN, DIE #1
2. DRAIN, #1
3. DRAIN, #2
4. DRAIN, #2
5. GATE, #2
6. SOURCE, #2
7. GATE, #1
8. SOURCE, #1

STYLE 4:
PIN 1. ANODE
2. ANODE
3. ANODE
4. ANODE
5. ANODE
6. ANODE
7. ANODE
8. COMMON CATHODE

STYLE 5:
PIN 1. DRAIN
2. DRAIN
3. DRAIN
4. DRAIN
5. GATE
6. GATE
7. SOURCE
8. SOURCE

STYLE 6:
PIN 1. SOURCE
2. DRAIN
3. DRAIN
4. SOURCE
5. SOURCE
6. GATE
7. GATE
8. SOURCE

STYLE 7:
PIN 1. INPUT
2. EXTERNAL BYPASS
3. THIRD STAGE SOURCE
4. GROUND
5. DRAIN
6. GATE 3
7. SECOND STAGE Vd
8. FIRST STAGE Vd

STYLE 8:
PIN 1. COLLECTOR, DIE #1
2. BASE, #1
3. BASE, #2
4. COLLECTOR, #2
5. COLLECTOR, #2
6. EMITTER, #2
7. EMITTER, #1
8. COLLECTOR, #1

STYLE 9:
PIN 1. EMITTER, COMMON
2. COLLECTOR, DIE #1
3. COLLECTOR, DIE #2
4. EMITTER, COMMON
5. EMITTER, COMMON
6. BASE, DIE #2
7. BASE, DIE #1
8. EMITTER, COMMON

STYLE 10:
PIN 1. GROUND
2. BIAS 1
3. OUTPUT
4. GROUND
5. GROUND
6. BIAS 2
7. INPUT
8. GROUND

STYLE 11:
PIN 1. SOURCE 1
2. GATE 1
3. SOURCE 2
4. GATE 2
5. DRAIN 2
6. DRAIN 2
7. DRAIN 1
8. DRAIN 1

STYLE 12:
PIN 1. SOURCE
2. SOURCE
3. SOURCE
4. GATE
5. DRAIN
6. DRAIN
7. DRAIN
8. DRAIN

STYLE 13:
PIN 1. N.C.
2. SOURCE
3. SOURCE
4. GATE
5. DRAIN
6. DRAIN
7. DRAIN
8. DRAIN

STYLE 14:
PIN 1. N−SOURCE
2. N−GATE
3. P−SOURCE
4. P−GATE
5. P−DRAIN
6. P−DRAIN
7. N−DRAIN
8. N−DRAIN

STYLE 15:
PIN 1. ANODE 1
2. ANODE 1
3. ANODE 1
4. ANODE 1
5. CATHODE, COMMON
6. CATHODE, COMMON
7. CATHODE, COMMON
8. CATHODE, COMMON

STYLE 16:
PIN 1. EMITTER, DIE #1
2. BASE, DIE #1
3. EMITTER, DIE #2
4. BASE, DIE #2
5. COLLECTOR, DIE #2
6. COLLECTOR, DIE #2
7. COLLECTOR, DIE #1
8. COLLECTOR, DIE #1

STYLE 17:
PIN 1. VCC
2. V2OUT
3. V1OUT
4. TXE
5. RXE
6. VEE
7. GND
8. ACC

STYLE 18:
PIN 1. ANODE
2. ANODE
3. SOURCE
4. GATE
5. DRAIN
6. DRAIN
7. CATHODE
8. CATHODE

STYLE 19:
PIN 1. SOURCE 1
2. GATE 1
3. SOURCE 2
4. GATE 2
5. DRAIN 2
6. MIRROR 2
7. DRAIN 1
8. MIRROR 1

STYLE 20:
PIN 1. SOURCE (N)
2. GATE (N)
3. SOURCE (P)
4. GATE (P)
5. DRAIN
6. DRAIN
7. DRAIN
8. DRAIN

STYLE 21:
PIN 1. CATHODE 1
2. CATHODE 2
3. CATHODE 3
4. CATHODE 4
5. CATHODE 5
6. COMMON ANODE
7. COMMON ANODE
8. CATHODE 6

STYLE 22:
PIN 1. I/O LINE 1
2. COMMON CATHODE/VCC
3. COMMON CATHODE/VCC
4. I/O LINE 3
5. COMMON ANODE/GND
6. I/O LINE 4
7. I/O LINE 5
8. COMMON ANODE/GND

STYLE 23:
PIN 1. LINE 1 IN
2. COMMON ANODE/GND
3. COMMON ANODE/GND
4. LINE 2 IN
5. LINE 2 OUT
6. COMMON ANODE/GND
7. COMMON ANODE/GND
8. LINE 1 OUT

STYLE 24:
PIN 1. BASE
2. EMITTER
3. COLLECTOR/ANODE
4. COLLECTOR/ANODE
5. CATHODE
6. CATHODE
7. COLLECTOR/ANODE
8. COLLECTOR/ANODE

STYLE 25:
PIN 1. VIN
2. N/C
3. REXT
4. GND
5. IOUT
6. IOUT
7. IOUT
8. IOUT

STYLE 26:
PIN 1. GND
2. dv/dt
3. ENABLE
4. ILIMIT
5. SOURCE
6. SOURCE
7. SOURCE
8. VCC

STYLE 27:
PIN 1. ILIMIT
2. OVLO
3. UVLO
4. INPUT+
5. SOURCE
6. SOURCE
7. SOURCE
8. DRAIN

STYLE 28:
PIN 1. SW_TO_GND
2. DASIC_OFF
3. DASIC_SW_DET
4. GND
5. V_MON
6. VBULK
7. VBULK
8. VIN

STYLE 29:
PIN 1. BASE, DIE #1
2. EMITTER, #1
3. BASE, #2
4. EMITTER, #2
5. COLLECTOR, #2
6. COLLECTOR, #2
7. COLLECTOR, #1
8. COLLECTOR, #1

STYLE 30:
PIN 1. DRAIN 1
2. DRAIN 1
3. GATE 2
4. SOURCE 2
5. SOURCE 1/DRAIN 2
6. SOURCE 1/DRAIN 2
7. SOURCE 1/DRAIN 2
8. GATE 1

DOCUMENT NUMBER:	**98ASB42564B**	Electronic versions are uncontrolled except when accessed directly from the Document Repository. Printed versions are uncontrolled except when stamped "CONTROLLED COPY" in red.	
DESCRIPTION:	**SOIC−8 NB**		**PAGE 2 OF 2**

onsemi and ONSEMI are trademarks of Semiconductor Components Industries, LLC dba **onsemi** or its subsidiaries in the United States and/or other countries. **onsemi** reserves the right to make changes without further notice to any products herein. **onsemi** makes no warranty, representation or guarantee regarding the suitability of its products for any particular purpose, nor does **onsemi** assume any liability arising out of the application or use of any product or circuit, and specifically disclaims any and all liability, including without limitation special, consequential or incidental damages. **onsemi** does not convey any license under its patent rights nor the rights of others.

© Semiconductor Components Industries, LLC, 2019

onsemi, , and other names, marks, and brands are registered and/or common law trademarks of Semiconductor Components Industries, LLC dba "**onsemi**" or its affiliates and/or subsidiaries in the United States and/or other countries. **onsemi** owns the rights to a number of patents, trademarks, copyrights, trade secrets, and other intellectual property. A listing of **onsemi**'s product/patent coverage may be accessed at www.onsemi.com/site/pdf/Patent−Marking.pdf. **onsemi** reserves the right to make changes at any time to any products or information herein, without notice. The information herein is provided "as−is" and **onsemi** makes no warranty, representation or guarantee regarding the accuracy of the information, product features, availability, functionality, or suitability of its products for any particular purpose, nor does **onsemi** assume any liability arising out of the application or use of any product or circuit, and specifically disclaims any and all liability, including without limitation special, consequential or incidental damages. Buyer is responsible for its products and applications using **onsemi** products, including compliance with all laws, regulations and safety requirements or standards, regardless of any support or applications information provided by **onsemi**. "Typical" parameters which may be provided in **onsemi** data sheets and/or specifications can and do vary in different applications and actual performance may vary over time. All operating parameters, including "Typicals" must be validated for each customer application by customer's technical experts. **onsemi** does not convey any license under any of its intellectual property rights nor the rights of others. **onsemi** products are not designed, intended, or authorized for use as a critical component in life support systems or any FDA Class 3 medical devices or medical devices with a same or similar classification in a foreign jurisdiction or any devices intended for implantation in the human body. Should Buyer purchase or use **onsemi** products for any such unintended or unauthorized application, Buyer shall indemnify and hold **onsemi** and its officers, employees, subsidiaries, affiliates, and distributors harmless against all claims, costs, damages, and expenses, and reasonable attorney fees arising out of, directly or indirectly, any claim of personal injury or death associated with such unintended or unauthorized use, even if such claim alleges that **onsemi** was negligent regarding the design or manufacture of the part. **onsemi** is an Equal Opportunity/Affirmative Action Employer. This literature is subject to all applicable copyright laws and is not for resale in any manner.

ADDITIONAL INFORMATION

TECHNICAL PUBLICATIONS:
Technical Library: www.onsemi.com/design/resources/technical−documentation
onsemi Website: www.onsemi.com

ONLINE SUPPORT: www.onsemi.com/support
For additional information, please contact your local Sales Representative at www.onsemi.com/support/sales