Isolated High Current IGBT Gate Driver

NCD57001F

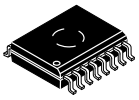

1

SOIC−16 WB
CASE 751G−03

NCD57001F is a variant of NCD57001 with reduced Soft−Turn−Off time suited to drive large IGBTs or power modules. NCD57001F is a high−current single channel IGBT driver with internal galvanic isolation, designed for high system efficiency and reliability in high power applications. Its features include complementary inputs, open drain FAULT and Ready outputs, active Miller clamp, accurate UVLOs, DESAT protection, and soft turn−off at DESAT. NCD57001F accommodates both 5 V and 3.3 V signals on the input side and wide bias voltage range on the driver side including negative voltage capability. NCD57001F provides >5 kVrms (UL1577 rating) galvanic isolation and >1200 V_{iorm} (working voltage) capabilities. NCD57001F is available in the wide−body SOIC−16 package with guaranteed 8 mm creepage distance between input and output to fulfill reinforced safety insulation requirements.

Features

- High Current Output (+4/−6 A) at IGBT Miller Plateau Voltages
- Low Output Impedance for Enhanced IGBT Driving
- Short Propagation Delays with Accurate Matching
- Active Miller Clamp to Prevent Spurious Gate Turn−on
- DESAT Protection with Programmable Delay
- Typ 550 ns Soft Turn Off during IGBT Short Circuit
- IGBT Gate Clamping during Short Circuit
- IGBT Gate Active Pull Down
- Tight UVLO Thresholds for Bias Flexibility
- Wide Bias Voltage Range including Negative VEE2
- 3.3 V to 5 V Input Supply Voltage
- 5000 V Galvanic Isolation (to meet UL1577 requirements)
- 1200 V Working Voltage (per VDE0884−10 requirements)
- High transient immunity
- High electromagnetic immunity
- This Device is Pb−Free, Halogen Free/BFR Free and is RoHS Compliant

Typical Applications

- Automotive Power Supplies
- HEV/EV Powertrain
- BSG Inverter
- PTC Heater

MARKING DIAGRAM

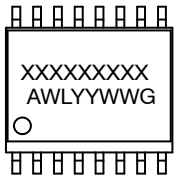

XXXXXXXXX	= Specific Device Code
A	= Assembly Location
WL	= Wafer Lot
YY	= Year
WW	= Work Week
G	= Pb−Free Package

PIN CONNECTIONS

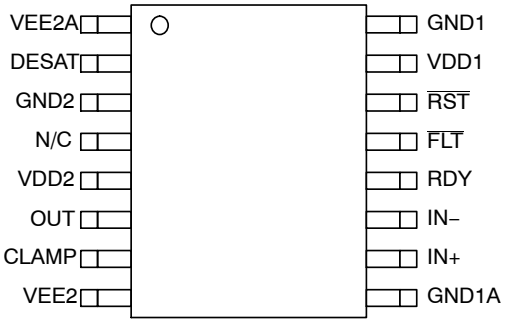

ORDERING INFORMATION

See detailed ordering and shipping information on page 10 of this data sheet.

© Semiconductor Components Industries, LLC, 2020

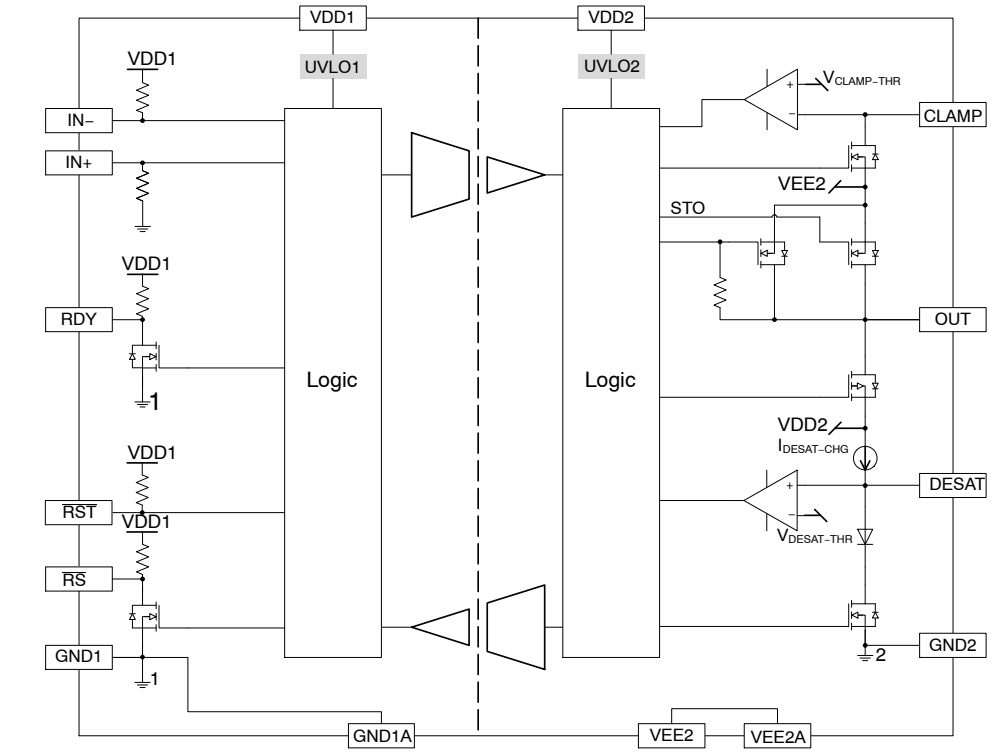

Figure 1. Simplified Block Diagram

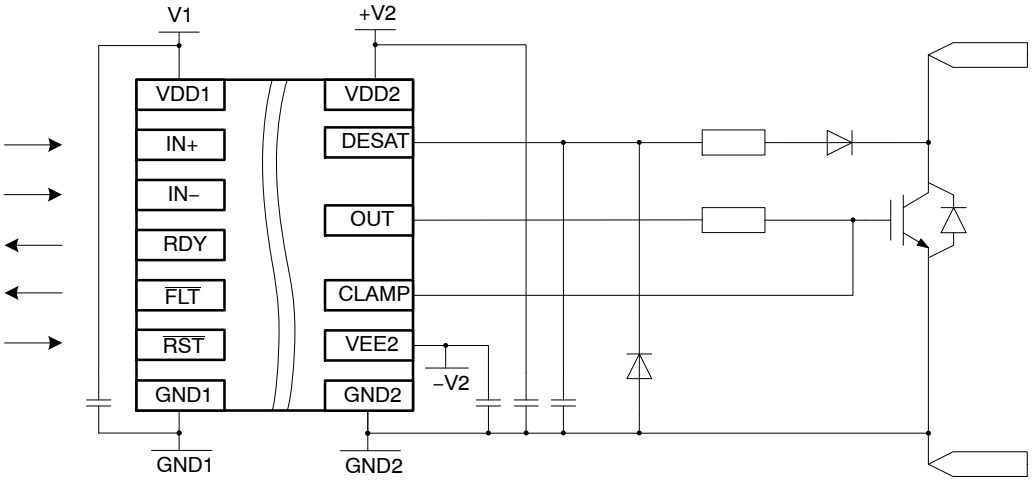

Figure 2. Simplified Application Schematics

Table 1. PIN FUNCTION DESCRIPTION

Pin Name	No.	I/O	Description
V_{EE2A}	1	Power	Output side negative power supply. A good quality bypassing capacitor is required from these pins to GND2 and should be placed close to the pins for best results. Connect it to GND2 for unipolar supply application.
V_{EE2}	8		
DESAT	2	I/O	Input for detecting the desaturation of IGBT due to a short circuit condition. An internal constant current source $I_{DESAT-CHG}$ charging an external capacitor connected to this pin allows a programmable blanking delay every ON cycle before DESAT fault is processed, thus preventing false triggering. When the DESAT voltage goes up and reaches $V_{DESAT-THR}$, the output is driven low. Further, the $\overline{FLT}$ output is activated, please refer to Figure 5. A 5 μs mute time apply to IN+ and IN− once DESAT occurs.
GND2	3	Power	Output side gate drive reference connecting to IGBT emitter or FET source.
N/C	4	−−	Not connected.
V_{DD2}	5	Power	Output side positive power supply. The operating range for this pin is from UVLO2 to its maximum allowed value. A good quality bypassing capacitor is required from this pin to GND2 and should be placed close to the pins for best results.
OUT	6	O	Driver output that provides the appropriate drive voltage and source/sink current to the IGBT/FET gate. OUT is actively pulled low during start−up and under Fault conditions.
CLAMP	7	I/O	Provides clamping for the IGBT/FET gate during the off period to protect it from parasitic turn−on. Its internal N FET is turned on when the voltage of this pin falls below V_{EE2} + $V_{CLAMP-THR}$. It is to be tied directly to IGBT/FET gate with minimum trace length for best results.
GND1	9	Power	Input side ground reference.
	16		
IN+	10	I	Non inverted gate driver input. It is internally clamped to V_{DD1} and has a pull−down resistor of 50 kΩ to ensure that output is low in the absence of an input signal. A minimum positive going pulse−width is required at IN+ before OUT responds.
IN−	11	I	Inverted gate driver input. It is internally clamped to V_{DD1} and has a pull−up resistor of 50 kΩ to ensure that output is low in the absence of an input signal. A minimum negative going pulse−width is required at IN− before OUT responds.
RDY	12	O	Power good indication output, active high when V_{DD2} is good. There is an internal 50 kΩ pull−up resistor connected to this pin. Multiple of them from different drivers can be “OR”ed together. If a low RDY event is triggered by UVLO2, the maximum low duration for RDY is 200 ns. OUT remains low when RDY is low. Short time delay may apply. See Figure 4 for details.
$\overline{FLT}$	13	O	Fault output (active low) that allows communication to the main controller that the driver has encountered a desaturation condition and has deactivated the output.
$\overline{RST}$	14	I	Reset input with an internal 50 kΩ pull−up resistor, active low to reset fault latch.
V_{DD1}	15	Power	Input side power supply (3.3 V to 5 V).

SAFETY AND INSULATION RATINGS

Symbol	Parameter		Value	Unit
	Installation Classifications per DIN VDE 0110/1.89 Table 1 Rated Mains Voltage	< 150 V_{RMS}	I – IV	
		< 300 V_{RMS}	I – IV	
		< 450 V_{RMS}	I – IV	
		< 600 V_{RMS}	I – IV	
		< 1000 V_{RMS}	I – III	
CTI	Comparative Tracking Index (DIN IEC 112/VDE 0303 Part 1)		600	
	Climatic Classification		–	
	Polution Degree (DIN VDE 0110/1.89)		–	
V_{PR}	Input–to–Output Test Voltage, Method b, V_{IORM} x 1.875 = V_{PR}, 100% Production Test with tm = 1 s, Partial Discharge < 5 pC		2250	V_{pk}
	Input–to–Output Test Voltage, Method a, V_{IORM} x 1.6 = V_{PR}, Type and Sample Test with tm = 10 s, Partial Discharge < 5 pC		–	V_{pk}
V_{IORM}	Maximum Repetitive Peak Voltage		1200	V_{pk}
V_{IOWM}	Maximum Working Insulation Voltage		870	V_{RMS}
V_{IOTM}	Highest Allowable Over Voltage		8400	V_{pk}
E_{CR}	External Creepage		8.0	mm
E_{CL}	External Clearance		8.0	mm
DTI	Insulation Thickness		17.3	um
T_{Case}	Safety Limit Values – Maximum Values in Failure; Case Temperature		150	°C
$P_{S,INPUT}$	Safety Limit Values – Maximum Values in Failure; Input Power		36	mW
$P_{S,OUTPUT}$	Safety Limit Values – Maximum Values in Failure; Output Power		1364	mW
R_{IO}	Insulation Resistance at TS, V_{IO} = 500 V		10^9	Ω

Table 2. ABSOLUTE MAXIMUM RATINGS (Note 1) Over operating free−air temperature range unless otherwise noted

Parameter	Symbol	Minimum	Maximum	Unit
Supply voltage, input side	V_{DD1}−GND1	−0.3	6	V
Positive Power Supply, output side	V_{DD2}−GND2	−0.3	25	V
Negative Power Supply, output side	V_{EE2}−GND2	−10	0.3	V
Differential Power Supply, output side	$V_{DD2}-V_{EE2}$ (V_{MAX2})	0	25	V
Gate−driver output voltage	V_{OUT}	V_{EE2} − 0.3	V_{DD2} + 0.3	V
Gate−driver output sourcing current (maximum pulse width = 10 μs, maximum duty cycle = 0.2%, V_{MAX2} = 20 V)	I_{PK-SRC}		7.8	A
Gate−driver output sinking current (maximum pulse width = 10 μs, maximum duty cycle = 0.2%, V_{MAX2} = 20 V)	I_{PK-SNK}		7.1	A
Clamp sinking current (maximum pulse width = 10 μs, maximum duty cycle = 0.2%, V_{CLAMP} = 3 V)	$I_{PK-CLAMP}$		2.5	A
Maximum Short Circuit Clamping Time (I_{OUT_CLAMP} = 500 mA)	t_{CLP}		10	μs
Voltage at IN+, IN−, $\overline{RST}$, $\overline{FLT}$, RDY	V_{LIM}−GND1	−0.3	V_{DD1} + 0.3	V
Output current of $\overline{FLT}$, RDY	I_{LIM}−GND1		10	mA
Desat Voltage	V_{DESAT}−GND2	−0.3	V_{DD2} + 0.3	V
Clamp Voltage	V_{CLAMP}−GND2	V_{EE2} − 0.3	V_{DD2} + 0.3	V
Power Dissipation SOIC−16 wide package	PD			mW
Maximum Junction Temperature	TJ(max)	−40	150	°C
Storage Temperature Range	TSTG	−65	150	°C
ESD Capability, Human Body Model (Note 2)	ESDHBM		±2	kV
ESD Capability, Charged Device Model (Note 2)	ESDCDM		±2	kV
Moisture Sensitivity Level	MSL		1	–
Lead Temperature Soldering Reflow, Pb−Free Versions (Note 3)	T_{SLD}		260	°C

Stresses exceeding those listed in the Maximum Ratings table may damage the device. If any of these limits are exceeded, device functionality should not be assumed, damage may occur and reliability may be affected.

1. Refer to ELECTRICAL CHARACTERISTICS and APPLICATION INFORMATION for Safe Operating Area.
2. This device series incorporates ESD protection and is tested by the following methods:
   ESD Human Body Model tested per AEC−Q100−002 (EIA/JESD22−A114).
   ESD Charged Device Model tested per AEC−Q100−011 (EIA/JESD22−C101).
   Latchup Current Maximum Rating: ≤ 100 mA per JEDEC standard: JESD78, 25°C.
3. For information, please refer to our Soldering and Mounting Techniques Reference Manual, SOLDERRM/D.

Table 3. THERMAL CHARACTERISTICS

Symbol	Parameter	Conditions	Value	Unit
R_{JA}	Thermal Resistance, Junction−to−Air	100 mm^2, 1 oz Copper, 1 Surface Layer	150	°C/W
		650 mm^2, 1 oz Copper, 2 Surface Layers and 2 Internal Power Plane Layers	84	

4. Refer to ELECTRICAL CHARACTERISTICS and APPLICATION INFORMATION for Safe Operating Area.
5. Values based on copper area of 100 mm^2 (or 0.16 in^2) of 1 oz copper thickness and FR4 PCB substrate.

Table 4. OPERATING RANGES (Note 6)

Parameter	Symbol	Min	Max	Unit
Supply voltage, input side	V_{DD1}–GND1	UVLO1	5.5	V
Positive Power Supply, output side	V_{DD2}–GND2	UVLO2	24	V
Negative Power Supply, output side	V_{EE2}–GND2	–10	0	V
Differential Power Supply, output side	V_{DD2}–V_{EE2} (V_{MAX2})	0	24	V
Low level input voltage at IN+, IN–, $\overline{RST}$	V_{IL}	0	0.3 × V_{DD1}	V
High level input voltage at IN+, IN–, $\overline{RST}$	V_{IH}	0.7 × V_{DD1}	V_{DD1}	V
Common Mode Transient Immunity (1500 V)	$\lvert dV_{ISO}/dt \rvert$	100		kV/μs
Ambient Temperature	T_A	–40	125	°C

Functional operation above the stresses listed in the Recommended Operating Ranges is not implied. Extended exposure to stresses beyond the Recommended Operating Ranges limits may affect device reliability.

6. Refer to ELECTRICAL CHARACTERISTICS and APPLICATION INFORMATION for Safe Operating Area.

ISOLATION CHARACTERISTICS

Symbol	Parameter	Conditions	Min	Typ	Max	Unit
$V_{ISO,\ input-output}$	Input–Output Isolation Voltage	T_A = 25°C, Relative Humidity < 50%, t = 1.0 minute, I_{I-O} 10 A, 50 Hz (See Note 7, 8, 9)	5000	–	–	V_{RMS}
R_{ISO}	Isolation Resistance	V_{I-O} = 500 V (See Note 7)	–	10^{11}	–	Ω

7. Device is considered a two–terminal device: pins 1 to 8 are shorted together and pins 9 to 16 are shorted together
8. 5,000 V_{RMS} for 1–minute duration is equivalent to 6,000 V_{RMS} for 1–second duration.
9. The input–output isolation voltage is a dielectric voltage rating per UL1577. It should not be regarded as an input–output continuous voltage rating. For the continuous working voltage rating, refer to equipment–level safety specification or DIN VDE V 0884–11 Safety and Insulation Ratings Table

Table 5. ELECTRICAL CHARACTERISTICS (V_{DD1} = 5 V, V_{DD2} = 15 V, V_{EE2} = –8 V.)

For typical values T_A = 25°C, for min/max values, T_A is the operating ambient temperature range that applies, unless otherwise noted.

Parameter	Test Conditions	Symbol	Min	Typ	Max	Unit
VOLTAGE SUPPLY						
UVLO1 Output Enabled		$V_{UVLO1-OUT-ON}$			3.0	V
UVLO1 Output Disabled		$V_{UVLO1-OUT-OFF}$	2.4			V
UVLO1 Hysteresis		$V_{UVLO1-HYST}$	0.125			V
UVLO2 Output Enabled		$V_{UVLO2-OUT-ON}$	13.2	13.5	13.8	V
UVLO2 Output Disabled		$V_{UVLO2-OUT-OFF}$	12.2	12.5	12.8	V
UVLO2 Hysteresis		$V_{UVLO2-HYST}$		1		V
Input Supply Quiescent Current Output Low	IN+ = Low, IN– = Low RDY = High, $\overline{FLT}$ = High	I_{DD1-0}		1	2	mA
Input Supply Quiescent Current Output High	IN+ = High, IN– = Low RDY = High, $\overline{FLT}$ = High	$I_{DD1-100}$		4.8	6	mA
Output Positive Supply Quiescent Current, Output Low	IN+ = Low, IN– = Low RDY = High, $\overline{FLT}$ = High, no load	I_{DD2-0}		3.3	4	mA
Output Positive Supply Quiescent Current, Output High	IN+ = High, IN– = Low RDY = High, $\overline{FLT}$ = High, no load	$I_{DD2-100}$		4	5	mA
Output Negative Supply Quiescent Current, Output Low	IN+ = High, IN– = Low, no load	I_{EE2-0}		0.4	2	mA
Output Negative Supply Quiescent Current, Output High	IN+ = High, IN– = Low, no load	$I_{EE2-100}$		0.2	2	mA

Table 5. ELECTRICAL CHARACTERISTICS (V_{DD1} = 5 V, V_{DD2} = 15 V, V_{EE2} = −8 V.) (continued)
For typical values T_A = 25°C, for min/max values, T_A is the operating ambient temperature range that applies, unless otherwise noted.

Parameter	Test Conditions	Symbol	Min	Typ	Max	Unit
LOGIC INPUT AND OUTPUT						
IN+, IN−, $\overline{RST}$ Low Input Voltage		V_{IL}			0.3 × V_{DD1}	V
IN+, IN−, $\overline{RST}$ High Input Voltage		V_{IH}	0.7 × V_{DD1}			V
Input Hysteresis Voltage		$V_{IN-HYST}$		0.15 × V_{DD1}		V
IN−, $\overline{RST}$ Input current (50 kΩ pull−up resistor)	V_{IN-}/V_{RST} = 0 V	I_{IN-L}, I_{RST-L}		−100		μA
IN+ Input Current (50 kΩ pull−down resistor)	V_{IN+} = 5 V	I_{IN+H}		100		μA
RDY, $\overline{FLT}$ Pull−up Current (50 kΩ pull−up resistor)	V_{RDY}/V_{FLT} = Low	I_{RDY-L}, I_{FLT-L}		100		μA
RDY, $\overline{FLT}$ Low Level Output Voltage	I_{RDY}/I_{FLT} = 5 mA	V_{RDY-L}, V_{FLT-L}			0.3	V
Input Pulse Width of IN+, IN− for No Response at Output		$t_{ON-MIN1}$			10	ns
Input Pulse Width of IN+, IN− for Guaranteed Response at Output		$t_{ON-MIN2}$	30			ns
Pulse Width of $\overline{RST}$ for Resetting $\overline{FLT}$		$t_{RST-MIN}$	800			ns
DRIVER OUTPUT						
Output Low State (V_{OUT} − V_{EE2})	I_{SINK} = 200 mA	V_{OUTL1}		0.1	0.2	V
	I_{SINK} = 1.0 A, T_A = 25°C	V_{OUTL3}		0.5	0.8	
Output High State (V_{DD2} − V_{OUT})	I_{SRC} = 200 mA	V_{OUTH1}		0.3	0.5	V
	I_{SRC} = 1.0 A, T_A = 25°C	V_{OUTH3}		0.8	1	
Peak Driver Current, Sink (Note 10)	V_{OUT} = 7.9 V	$I_{PK-SNK1}$		7.1		A
Peak Driver Current, Source (Note 10)	V_{OUT} = −5 V	$I_{PK-SRC1}$		7.8		A
MILLER CLAMP						
Clamp Voltage	I_{CLAMP} = 2.5 A, T_A = 25°C	V_{CLAMP}		1.3	1.7	V
	I_{CLAMP} = 2.5 A, T_A = −40°C to 125°C				2.5	
Clamp Activation Threshold		$V_{CLAMP-THR}$	1.5	2	2.5	V
IGBT SHORT CIRCUIT CLAMPING						
Clamping Voltage (V_{OUT} − V_{DD2})	IN+ = Low, IN− = High, I_{OUT} = 500 mA (pulse test, t_{CLPmax} = 10 μs)	$V_{CLAMP-OUT}$		0.9	1	V
Clamping Voltage, Clamp (V_{CLAMP} − V_{DD2})	IN+ = High, IN− = Low, $I_{CLAMP-CLAMP}$ = 500 mA (pulse test, t_{CLPmax} = 10 μs)	$V_{CLAMP-CLAMP}$		1.4	1.5	V
DESAT PROTECTION						
DESAT Threshold Voltage		$V_{DESAT-THR}$	8.5	9	9.5	V
Blanking Charge Current	V_{DESAT} = 7 V	$I_{DESAT-CHG}$	0.45	0.5	0.55	mA
Blanking Discharge Current		$I_{DESAT-DIS}$		50		mA
DYNAMIC CHARACTERISTIC						

Table 5. ELECTRICAL CHARACTERISTICS (V_{DD1} = 5 V, V_{DD2} = 15 V, V_{EE2} = −8 V.) (continued)
For typical values T_A = 25°C, for min/max values, T_A is the operating ambient temperature range that applies, unless otherwise noted.

Parameter	Test Conditions	Symbol	Min	Typ	Max	Unit
DYNAMIC CHARACTERISTIC						
IN+, IN− to Output High Propagation Delay	C_{LOAD} = 10 nF V_{IH} to 10% of output change for PW > 150 ns. OUT and CLAMP pins are connected together	t_{PD-ON}	40	60	90	ns
IN+, IN− to Output Low Propagation Delay	C_{LOAD} = 10 nF V_{IL} to 90% of output change for PW > 150 ns. OUT and CLAMP pins are connected together	t_{PD-OFF}	40	66	90	ns
Propagation Delay Distortion (= t_{PD-ON} − t_{PD-OFF})	T_A = 25°C, PW >150 ns	$t_{DISTORT}$	−15	−6	15	ns
	T_A = −40°C to 125°C, PW > 150 ns		−25		25	
Prop Delay Distortion between Parts	PW > 150 ns	$t_{DISTORT_TOT}$	−30	0	30	ns
Rise Time (see Figure 3)	C_{LOAD} = 1 nF, 10% to 90% of Output Change	t_{RISE}		14		ns
Fall Time (see Figure 3)	C_{LOAD} = 1 nF, 90% to 10% of Output Change	t_{FALL}		19		ns
DESAT Leading Edge Blanking Time (See Figure 5)		t_{LEB}		450		ns
DESAT Threshold Filtering Time (see Figure 5)		t_{FILTER}		370		ns
Soft Turn Off Time (see Figure 5)	C_{LOAD} = 10 nF, R_G = 10 Ω. V_{EE2} = 0 V	t_{STO}		550		ns
	C_{LOAD} = 10 nF, R_G = 10 Ω			750		
Delay after t_{FILTER} to $\overline{FLT}$		t_{FLT}		450	1000	ns
Input Mute Time after t_{FILTER}		t_{MUTE}		5		μs
$\overline{RST}$ Rise to $\overline{FLT}$ Rise Delay		t_{RST}		23	100	ns
RDY High to Output High Delays (see Figure 4)		t_{RDY1O}		55	100	ns
		t_{RDY2O}				
$V_{UVLO2-OUT-OFF}$ to RDY Low Delays (see Figure 4)		t_{RDY1F}	6	8	15	μs
		t_{RDY2F}				

Product parametric performance is indicated in the Electrical Characteristics for the listed test conditions, unless otherwise noted. Product performance may not be indicated by the Electrical Characteristics if operated under different conditions.
10. Values based on design and/or characterization.

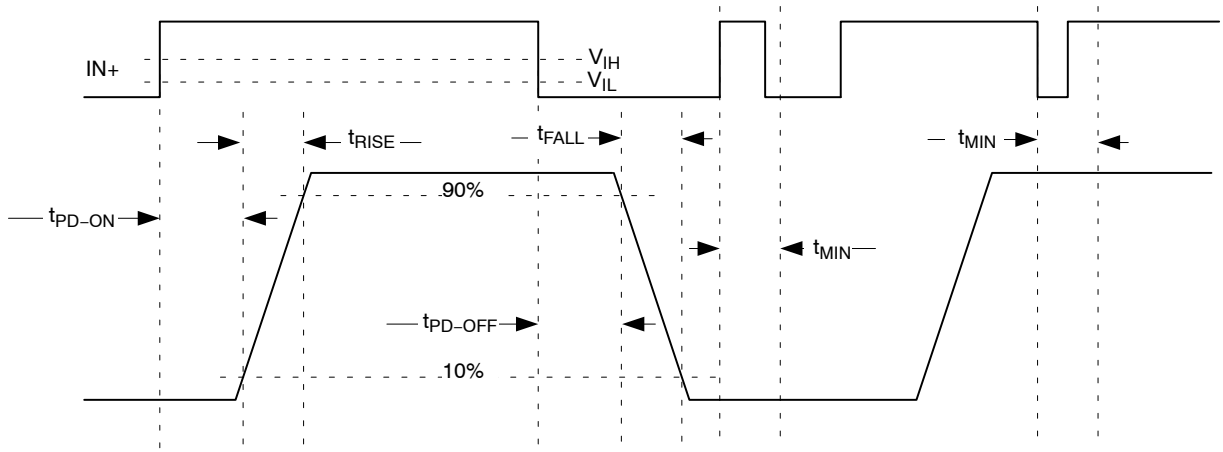

Figure 3. Simplified Block Diagram

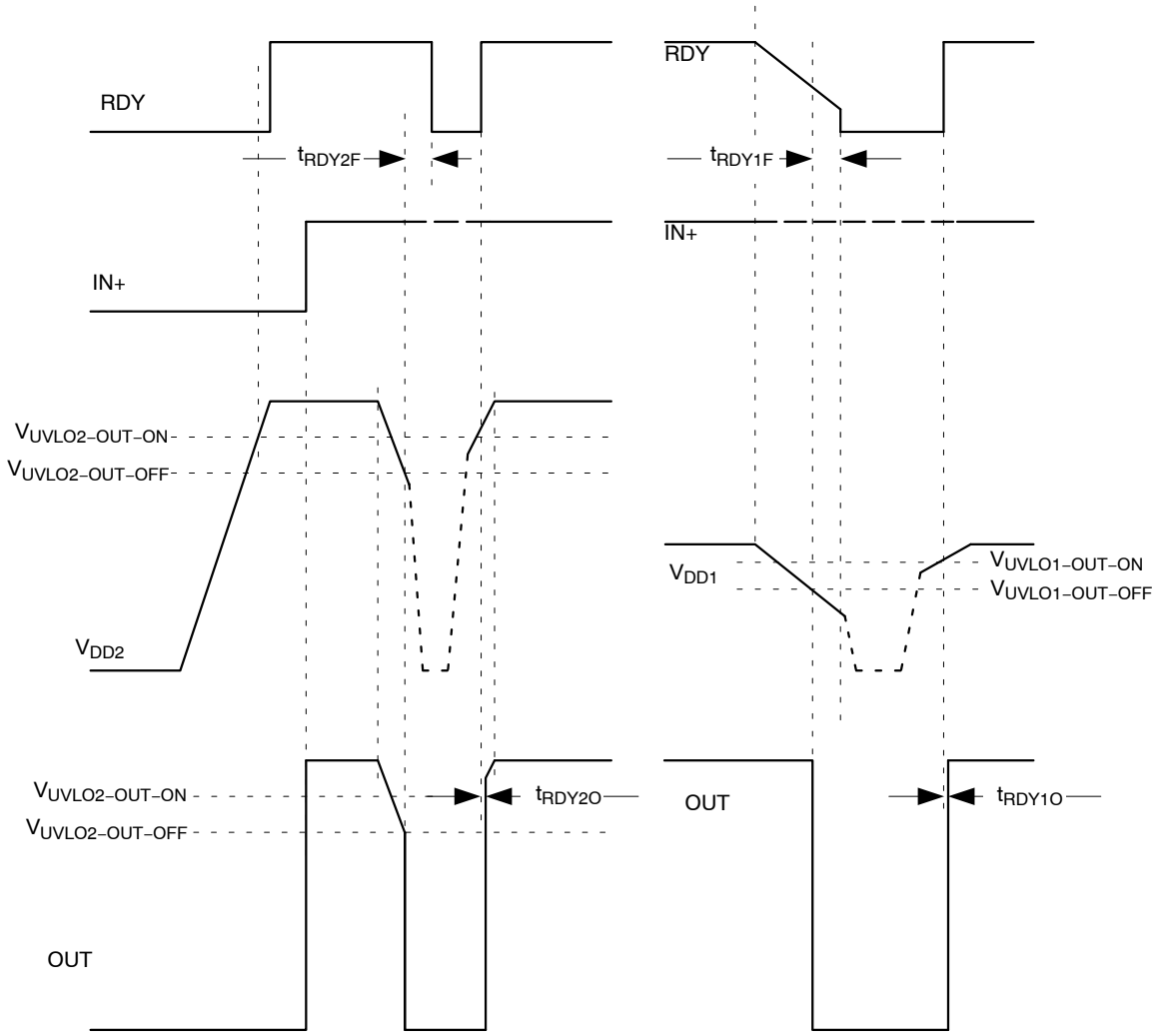

Figure 4. Simplified Block Diagram

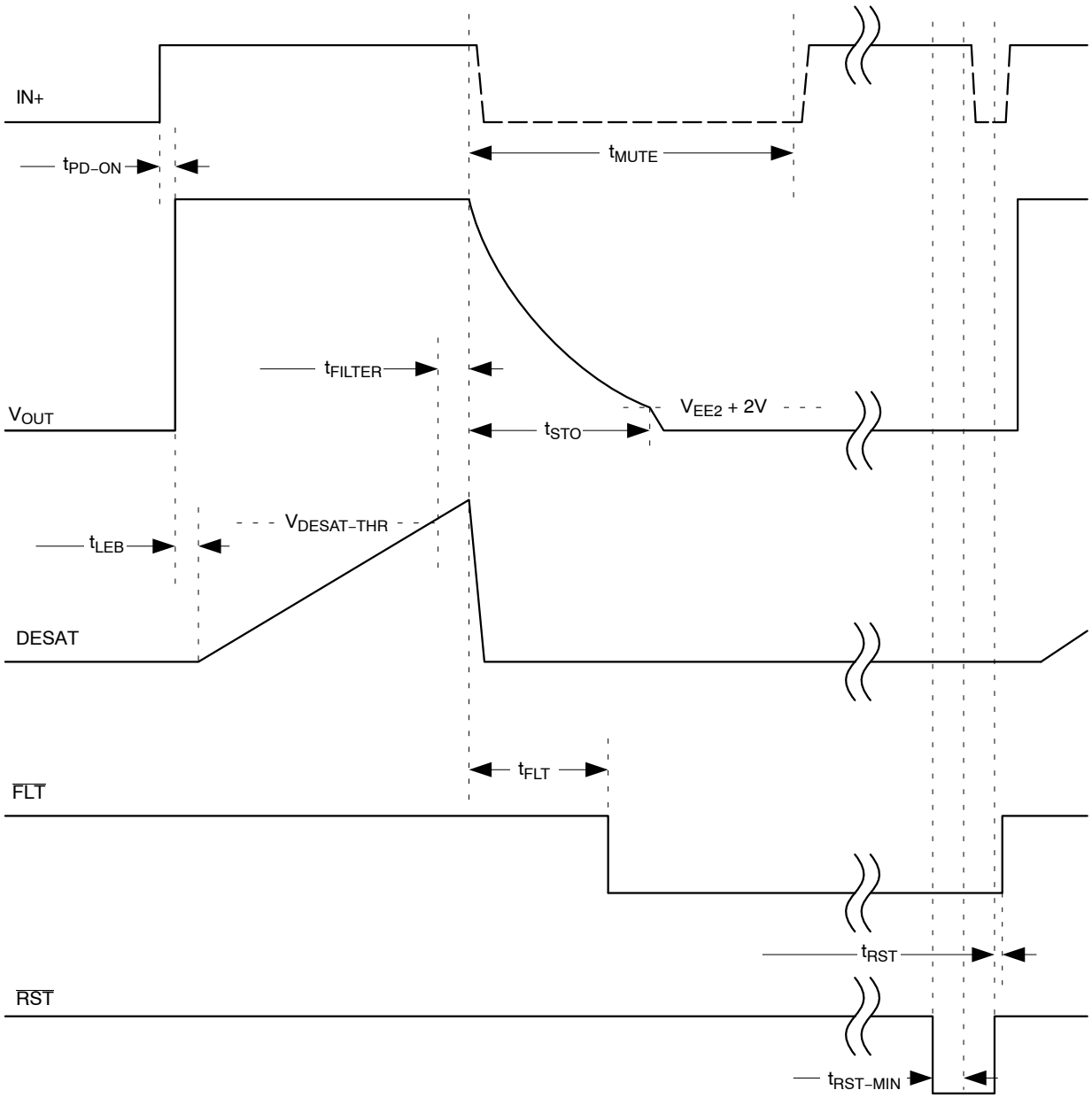

Figure 5. UVLO Waveform

ORDERING INFORMATION

Device	Package	Shipping†
NCD57001FDWR2G	SOIC−16 Wide Body (Pb−Free)	1,000 / Tape & Reel

†For information on tape and reel specifications, including part orientation and tape sizes, please refer to our Tape and Reel Packaging Specifications Brochure, BRD8011/D.

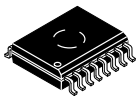

1

SCALE 1:1

SOIC−16 WB
CASE 751G
ISSUE E

DATE 08 OCT 2021

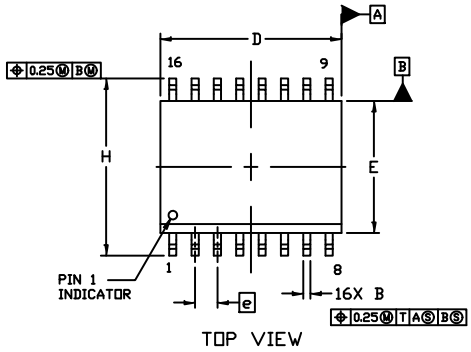

TOP VIEW

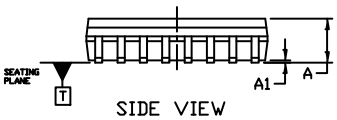

SIDE VIEW

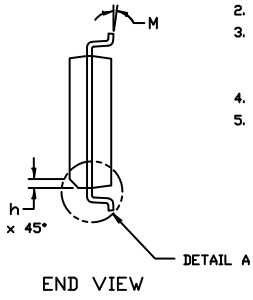

END VIEW

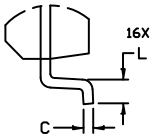

DETAIL A
2X SCALE

NOTES:
1. DIMENSIONING AND TOLERANCING PER ASME Y14.5M, 1994.
2. CONTROLLING DIMENSION: MILLIMETERS
3. DIMENSION b DOES NOT INCLUDE DAMBAR PROTRUSION. ALLOWABLE PROTRUSION SHALL BE 0.13 TOTAL IN EXCESS OF B DIMENSION AT MAXIMUM MATERIAL CONDITION.
4. DIMENSIONS D AND E DO NOT INCLUDE MOLD PROTRUSIONS.
5. MAXIMUM MOLD PROTRUSION OR FLASH TO BE 0.15 PER SIDE.

	MILLIMETERS	
DIM	MIN.	MAX.
A	2.35	2.65
A1	0.10	0.25
B	0.35	0.49
C	0.23	0.32
D	10.15	10.45
E	7.40	7.60
e	1.27 BSC	
H	10.05	10.55
h	0.53 REF	
L	0.50	0.90
M	0°	7°

GENERIC MARKING DIAGRAM*

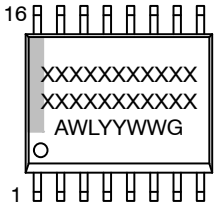

XXXXX = Specific Device Code
A = Assembly Location
WL = Wafer Lot
YY = Year
WW = Work Week
G = Pb−Free Package

*This information is generic. Please refer to device data sheet for actual part marking. Pb−Free indicator, “G” or microdot “▪”, may or may not be present. Some products may not follow the Generic Marking.

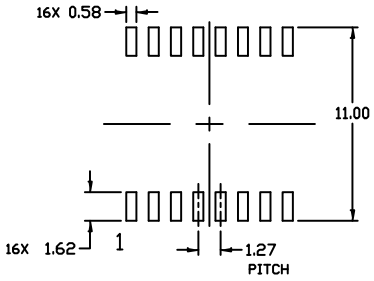

RECOMMENDED
MOUNTING FOOTPRINT

DOCUMENT NUMBER:	**98ASB42567B**	Electronic versions are uncontrolled except when accessed directly from the Document Repository. Printed versions are uncontrolled except when stamped “CONTROLLED COPY” in red.	
DESCRIPTION:	**SOIC−16 WB**		**PAGE 1 OF 1**

onsemi and onsemi are trademarks of Semiconductor Components Industries, LLC dba **onsemi** or its subsidiaries in the United States and/or other countries. **onsemi** reserves the right to make changes without further notice to any products herein. **onsemi** makes no warranty, representation or guarantee regarding the suitability of its products for any particular purpose, nor does **onsemi** assume any liability arising out of the application or use of any product or circuit, and specifically disclaims any and all liability, including without limitation special, consequential or incidental damages. **onsemi** does not convey any license under its patent rights nor the rights of others.

onsemi, , and other names, marks, and brands are registered and/or common law trademarks of Semiconductor Components Industries, LLC dba "**onsemi**" or its affiliates and/or subsidiaries in the United States and/or other countries. **onsemi** owns the rights to a number of patents, trademarks, copyrights, trade secrets, and other intellectual property. A listing of **onsemi**'s product/patent coverage may be accessed at www.onsemi.com/site/pdf/Patent−Marking.pdf. **onsemi** reserves the right to make changes at any time to any products or information herein, without notice. The information herein is provided "as−is" and **onsemi** makes no warranty, representation or guarantee regarding the accuracy of the information, product features, availability, functionality, or suitability of its products for any particular purpose, nor does **onsemi** assume any liability arising out of the application or use of any product or circuit, and specifically disclaims any and all liability, including without limitation special, consequential or incidental damages. Buyer is responsible for its products and applications using **onsemi** products, including compliance with all laws, regulations and safety requirements or standards, regardless of any support or applications information provided by **onsemi**. "Typical" parameters which may be provided in **onsemi** data sheets and/or specifications can and do vary in different applications and actual performance may vary over time. All operating parameters, including "Typicals" must be validated for each customer application by customer's technical experts. **onsemi** does not convey any license under any of its intellectual property rights nor the rights of others. **onsemi** products are not designed, intended, or authorized for use as a critical component in life support systems or any FDA Class 3 medical devices or medical devices with a same or similar classification in a foreign jurisdiction or any devices intended for implantation in the human body. Should Buyer purchase or use **onsemi** products for any such unintended or unauthorized application, Buyer shall indemnify and hold **onsemi** and its officers, employees, subsidiaries, affiliates, and distributors harmless against all claims, costs, damages, and expenses, and reasonable attorney fees arising out of, directly or indirectly, any claim of personal injury or death associated with such unintended or unauthorized use, even if such claim alleges that **onsemi** was negligent regarding the design or manufacture of the part. **onsemi** is an Equal Opportunity/Affirmative Action Employer. This literature is subject to all applicable copyright laws and is not for resale in any manner.

ADDITIONAL INFORMATION

TECHNICAL PUBLICATIONS:
Technical Library: www.onsemi.com/design/resources/technical−documentation
onsemi Website: www.onsemi.com

ONLINE SUPPORT: www.onsemi.com/support
For additional information, please contact your local Sales Representative at www.onsemi.com/support/sales