1.8 V/2.5 V, 10 GHz ÷2 Clock Divider with CML Outputs

Multi−Level Inputs w/ Internal Termination

NB7V32M



QFN−16
MN SUFFIX
CASE 485G

MARKING DIAGRAM*

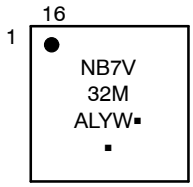

A = Assembly Location
L = Wafer Lot
Y = Year
W = Work Week
▪ = Pb−Free Package
(Note: Microdot may be in either location)

*For additional marking information, refer to Application Note AND8002/D.

Description

The NB7V32M is a differential ÷2 Clock divider with asynchronous reset. The differential Clock inputs incorporate internal 50 Ω termination resistors and will accept LVPECL, CML and LVDS logic levels.

The NB7V32M produces a ÷2 output copy of an input Clock operating up to 10 GHz with minimal jitter.

The RESET Pin is asserted on the rising edge. Upon power−up, the internal flip−flops will attain a random state; the Reset allows for the synchronization of multiple NB7V32M's in a system.

The 16 mA differential CML output provides matching internal 50 Ω termination which guarantees 400 mV output swing when externally receiver terminated with 50 Ω to V_{CC} .

The NB7V32M is the 1.8 V/2.5 V version of the NB7L32M (2.5 V/3.3 V) and is offered in a low profile 3 mm x 3 mm 16−pin QFN package. The NB7V32M is a member of the GigaComm™ family of high performance clock products. Application notes, models, and support documentation are available at www.onsemi.com.

Features

- Maximum Input Clock Frequency > 10 GHz, typical
- Random Clock Jitter < 0.8 ps RMS
- 200 ps Typical Propagation Delay
- 35 ps Typical Rise and Fall Times
- Differential CML Outputs, 400 mV Peak−to−Peak, Typical
- Operating Range: V_{CC} = 1.71 V to 2.625 V with GND = 0 V
- Internal 50 Ω Input Termination Resistors
- QFN−16 Package, 3 mm x 3 mm
- −40°C to +85°C Ambient Operating Temperature
- These Devices are Pb−Free and RoHS Compliant

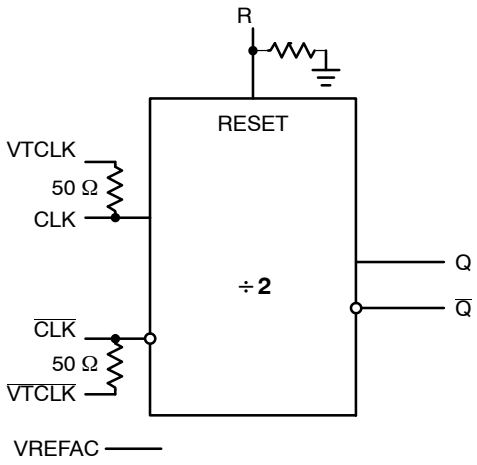

Figure 1. Simplified Logic Diagram

ORDERING INFORMATION

See detailed ordering and shipping information in the package dimensions section on page 8 of this data sheet.

© Semiconductor Components Industries, LLC, 2010

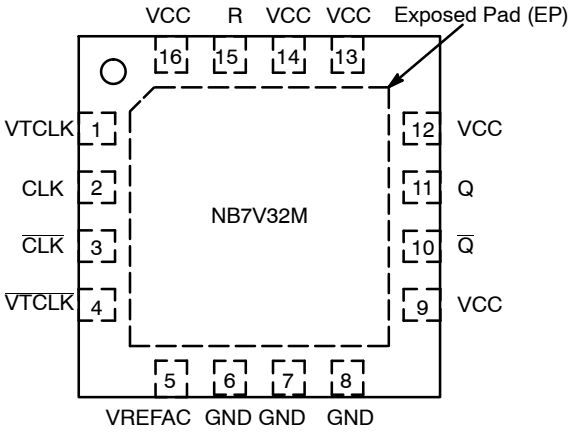

Figure 2. Pin Configuration (Top View)

Table 1. TRUTH TABLE

CLK	$\overline{CLK}$	R	Q	$\overline{Q}$
x	x	H	L	H
Z	W	L	CLK ÷ 2	$\overline{CLK}$ ÷ 2

Z = LOW to HIGH Transition
W = HIGH to LOW Transition
x = Don't Care

Table 2. PIN DESCRIPTION

Pin	Name	I/O	Description
1	VTCLK	–	Internal 50 Ω Termination Pin for CLK
2	CLK	LVPECL, CML, LVDS Input	Non−inverted Differential CLK Input. (Note 1)
3	$\overline{CLK}$	LVPECL, CML, LVDS Input	Inverted Differential CLK Input. (Note 1)
4	$\overline{VTCLK}$	–	Internal 50 Ω Termination Pin for $\overline{CLK}$
5	VREFAC	–	Internally Generated Output Voltage Reference for Capacitor−Coupled Inputs, only
6	GND	–	Negative Supply Voltage
7	GND	–	Negative Supply Voltage
8	GND	–	Negative Supply Voltage
9	VCC	–	Positive Supply Voltage. (Note 2)
10	$\overline{Q}$	CML Output	Inverted Differential Output
11	Q	CML Output	Non−Inverted Differential Output
12	VCC	–	Positive Supply Voltage. (Note 2)
13	VCC	–	Positive Supply Voltage. (Note 2)
14	VCC	–	Positive Supply Voltage. (Note 2)
15	R	LVCMOS Input	Asynchronous Reset Input. Internal 75 kΩ pulldown to GND.
16	VCC	–	Positive Supply Voltage. (Note 2)
–	EP	–	The Exposed Pad (EP) on the QFN−16 package bottom is thermally connected to the die for improved heat transfer out of package. The exposed pad must be attached to a heat−sinking conduit. The pad is electrically connected to the die, and must be electrically and thermally connected to GND on the PC board.

1. In the differential configuration when the input termination pins (VTCLK, $\overline{VTCLK}$) are connected to a common termination voltage or left open, and if no signal is applied on CLK/$\overline{CLK}$ input, then the device will be susceptible to self−oscillation. Q/$\overline{Q}$ outputs have internal 50 Ω source termination resistors.
2. VCC and GND pins must be externally connected to a power supply for proper operation.

Table 3. ATTRIBUTES

Characteristics	Value
ESD Protection Human Body Model Machine Model	 > 4 kV > 200 V
Moisture Sensitivity 16−QFN	 Level 1
Flammability Rating Oxygen Index: 28 to 34	 UL 94 V−0 @ 0.125 in
Transistor Count	164
Meets or exceeds JEDEC Spec EIA/JESD78 IC Latchup Test	

For additional information, see Application Note AND8003/D.

Table 4. MAXIMUM RATINGS

Symbol	Parameter	Condition 1	Condition 2	Rating	Unit
V_{CC}	Positive Power Supply	GND = 0 V		3.0	V
V_{IN}	Positive Input Voltage	GND = 0 V		−0.5 to V_{CC} + 0.5 V	V
V_{INPP}	Differential Input Voltage |D − $\overline{D}$|			1.89	V
I_{IN}	Input Current Through R_T (50 Ω Resistor)			±40	mA
I_{OUT}	Output Current Through R_T (50 Ω Resistor)			±40	mA
I_{VREFAC}	VREFAC Sink/Source Current			±1.5	mA
T_A	Operating Temperature Range			−40 to +85	°C
T_{stg}	Storage Temperature Range			−65 to +150	°C
θ_{JA}	Thermal Resistance (Junction−to−Ambient) (Note 3)	0 lfpm 500 lfpm	QFN−16 QFN−16	42 35	°C/W °C/W
θ_{JC}	Thermal Resistance (Junction−to−Case) (Note 3)		QFN−16	4	°C/W
T_{sol}	Wave Solder Pb−Free			265	°C

Stresses exceeding those listed in the Maximum Ratings table may damage the device. If any of these limits are exceeded, device functionality should not be assumed, damage may occur and reliability may be affected.

3. JEDEC standard multilayer board − 2S2P (2 signal, 2 power) with 8 filled thermal vias under exposed pad.

Table 5. DC CHARACTERISTICS POSITIVE CML OUTPUT V_{CC} = 1.71 V to 2.625 V; GND = 0 V; T_A = −40°C to 85°C (Note 4)

Symbol	Characteristic	Min	Typ	Max	Unit
POWER SUPPLY CURRENT					
I_{CC}	Power Supply Current (Inputs and Outputs Open) V_{CC} = 2.5 V ±5% V_{CC} = 1.8 V ±5%		 90 80	 100 90	mA
CML OUTPUTS					
V_{OH}	Output HIGH Voltage (Note 5) V_{CC} = 2.5 V V_{CC} = 1.8 V	V_{CC} − 30 2470 1770	V_{CC} − 1 2490 1790	V_{CC} 2500 1800	mV
V_{OL}	Output LOW Voltage (Note 5) V_{CC} = 2.5 V V_{CC} = 2.5 V V_{CC} = 1.8 V V_{CC} = 1.8 V	 V_{CC} − 600 1900 V_{CC} − 550 1250	 V_{CC} − 500 2000 V_{CC} − 450 1350	 V_{CC} − 400 2100 V_{CC} − 350 1450	mV
DIFFERENTIAL INPUTS DRIVEN SINGLE−ENDED (Note 6) (Figures 5 and 7)					
V_{th}	Input Threshold Reference Voltage Range (Note 7)	1050		V_{CC} − 100	mV
V_{IH}	Single−Ended Input HIGH Voltage	V_{th} + 100		V_{CC}	mV
V_{IL}	Single−Ended Input LOW Voltage	GND		V_{th} − 100	mV
V_{ISE}	Single−Ended Input Voltage (V_{IH} − V_{IL})	200		1200	mV
VREFAC					
V_{REFAC}	Output Reference Voltage @ 100 μA for capacitor− coupled inputs, only V_{CC} = 2.5 V (Note 8) V_{CC} = 1.8 V	 V_{CC} − 850 V_{CC} − 750		 V_{CC} − 500 V_{CC} − 450	mV
DIFFERENTIAL INPUTS DRIVEN DIFFERENTIALLY (Figures 6 and 9) (Note 9)					
V_{IHD}	Differential Input HIGH Voltage	1100		V_{CC}	mV
V_{ILD}	Differential Input LOW Voltage	GND		V_{CC} − 100	mV
V_{ID}	Differential Input Voltage (V_{IHD} − V_{ILD})	100		1200	mV
V_{CMR}	Input Common Mode Range (Differential Configuration, Note 10) (Figure 9)	1050		V_{CC} − 50	mV
I_{IH}	Input HIGH Current (VTCLK/$\overline{\text{VTCLK}}$ Open)	−150		150	uA
I_{IL}	Input LOW Current (VTCLK/$\overline{\text{VTCLK}}$ Open)	−150		150	uA
CONTROL INPUT (Reset Pin)					
V_{IH}	Input HIGH Voltage for Control Pin	V_{CC} − 200		V_{CC}	mV
V_{IL}	Input LOW Voltage for Control Pin	GND		200	mV
I_{IH}	Input HIGH Current	−150		150	uA
I_{IL}	Input LOW Current	−150		150	uA
TERMINATION RESISTORS					
R_{TIN}	Internal Input Termination Resistor (@ 10 mA)	45	50	55	Ω
R_{TOUT}	Internal Output Termination Resistor (@ 10 mA)	45	50	55	Ω

NOTE: Device will meet the specifications after thermal equilibrium has been established when mounted in a test socket or printed circuit board with maintained transverse airflow greater than 500 lfpm.

4. Input and output parameters vary 1:1 with V_{CC}.
5. CML outputs loaded with 50 Ω to V_{CC} for proper operation.
6. V_{th}, V_{IH}, V_{IL} and V_{ISE} parameters must be complied with simultaneously.
7. V_{th} is applied to the complementary input when operating in single−ended mode.
8. V_{REFAC} will not be less than GND + 1050 mV.
9. V_{IHD}, V_{ILD}, V_{ID} and V_{CMR} parameters must be complied with simultaneously.
10. V_{CMR} min varies 1:1 with GND, V_{CMR} max varies 1:1 with V_{CC}. The V_{CMR} range is referenced to the most positive side of the differential input signal.

Table 6. AC CHARACTERISTICS V_{CC} = 1.71 V to 2.625 V; GND = 0 V; T_A = −40°C to 85°C (Note 11)

Symbol	Characteristic		Min	Typ	Max	Unit
f_{MAX}	Maximum Input Clock Frequency		10			GHz
V_{OUTPP}	Output Voltage Amplitude (@ $V_{INPPmin}$) (Note 12) (Figure 3)	f_{in} ≤ 10GHz	280	400		mV
t_{PLH}, t_{PHL}	Propagation Delay to Differential Outputs, @ 1 GHz, measured at differential cross−point	CLK/$\overline{CLK}$ to Q, $\overline{Q}$ R to Q, $\overline{Q}$	150	200 200	275	ps
t_{PLH} TC	Propagation Delay Temperature Coefficient			50		Δfs/°C
t_{skew}	Duty Cycle Skew (Note 13) Device − Device skew ($t_{pdmax} - t_{pdmin}$)				20 50	ps
t_{RR}	Reset Recovery (See Figure 11)		300	135		
t_{PW}	Minimum Pulse Width R		500	200		
t_{DC}	Output Clock Duty Cycle (Reference Duty Cycle = 50%) f_{in} 3 ≤ 10 GHz		45	50	55	%
t_{JITTER}	RJ − Output Random Jitter (Note 14) f_{in} ≤ 10 GHz			0.2	0.8	ps RMS
V_{INPP}	Input Voltage Swing (Differential Configuration) (Figure 10) (Note 15)		100		1200	mV
t_r, t_f	Output Rise/Fall Times @ 1 GHz (20% − 80%), Q, $\overline{Q}$			35	60	ps

NOTE: Device will meet the specifications after thermal equilibrium has been established when mounted in a test socket or printed circuit board with maintained transverse airflow greater than 500 lfpm.

11. Measured using a 1 GHz, V_{INPP}min, 50% duty−cycle clock source. All output loading with external 50 Ω to V_{CC}. Input edge rates 40 ps (20% − 80%).
12. Output voltage swing is a single−ended measurement operating in differential mode.
13. Duty cycle skew is defined only for differential operation when the delays are measured from cross−point of the inputs to the cross−point of the outputs. Duty cycle skew is measured between differential outputs using the deviations of the sum of T_{pw-} and T_{pw+} @ 1 GHz. Skew is measured between outputs under identical transitions and conditions.
14. Additive RMS jitter with 50% duty cycle clock signal.
15. Input voltage swing is a single−ended measurement operating in differential mode.

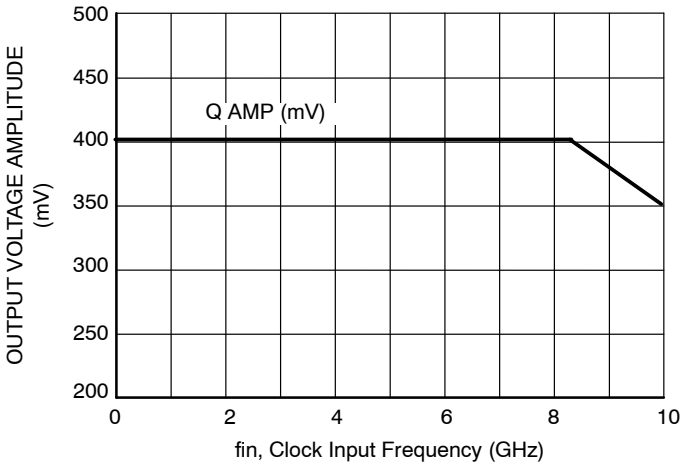

Figure 3. CLOCK Output Voltage Amplitude (V_{OUTPP}) vs. Input Frequency (f_{in}) at Ambient Temperature (Typ)

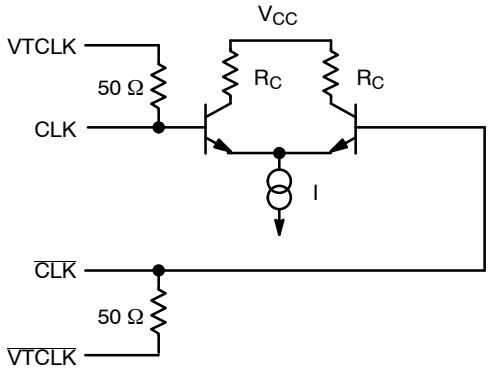

Figure 4. Input Structure

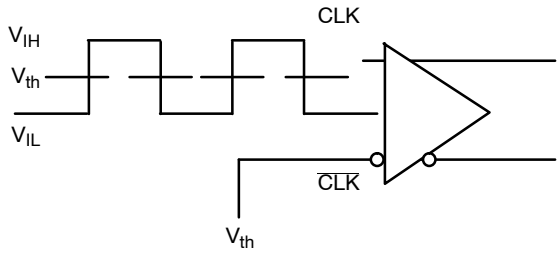

Figure 5. Differential Input Driven Single−Ended

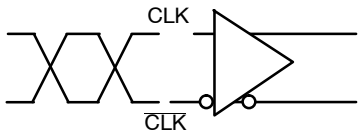

Figure 6. Differential Inputs Driven Differentially

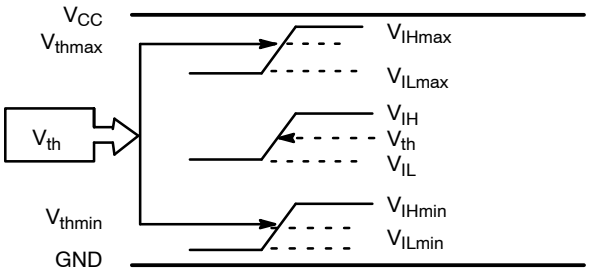

Figure 7. V_{th} Diagram

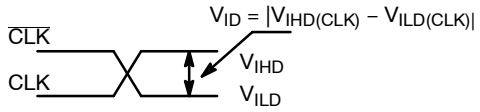

Figure 8. Differential Inputs Driven Differentially

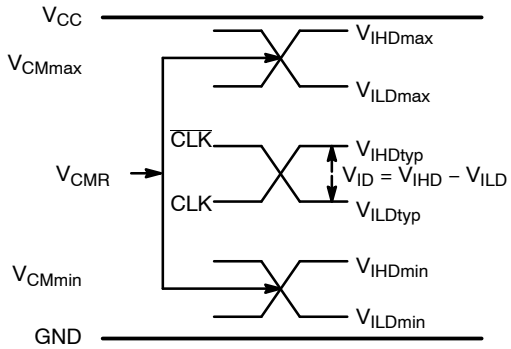

Figure 9. V_{CMR} Diagram

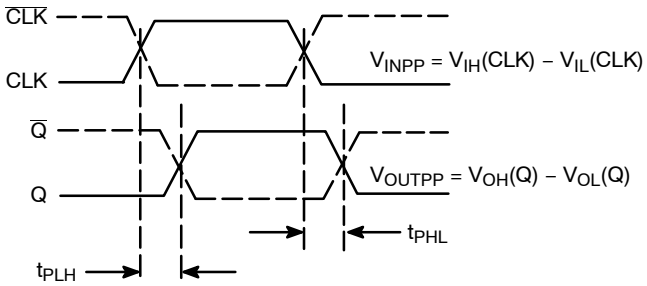

Figure 10. AC Reference Measurement

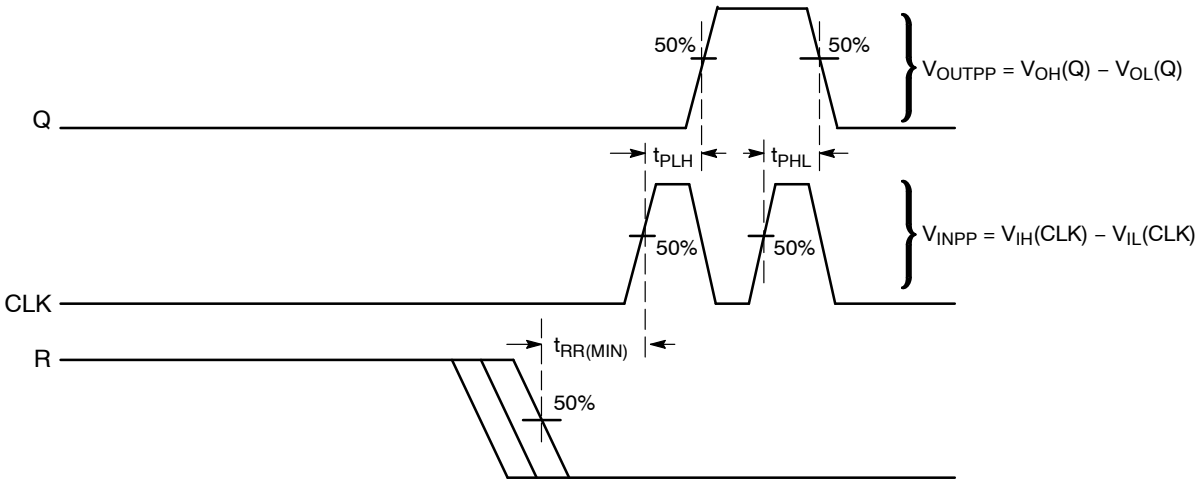

Figure 11. AC Reference Measurement (Timing Diagram)

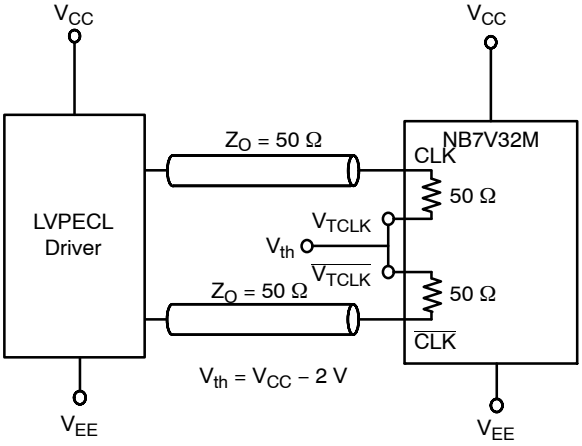

Figure 12. LVPECL Interface

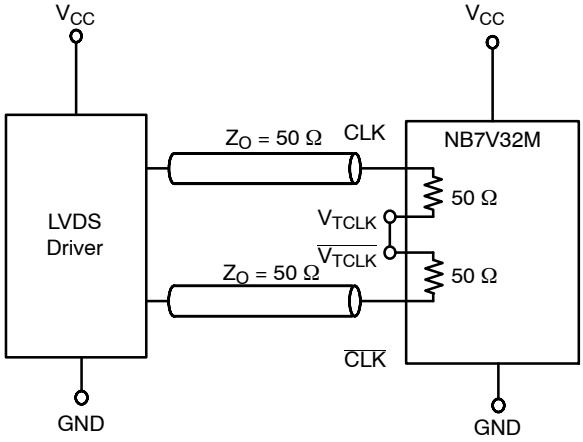

Figure 13. LVDS Interface

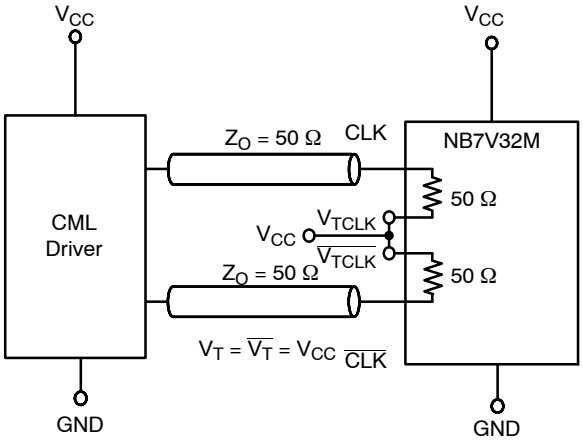

Figure 14. Standard 50 Ω Load CML Interface

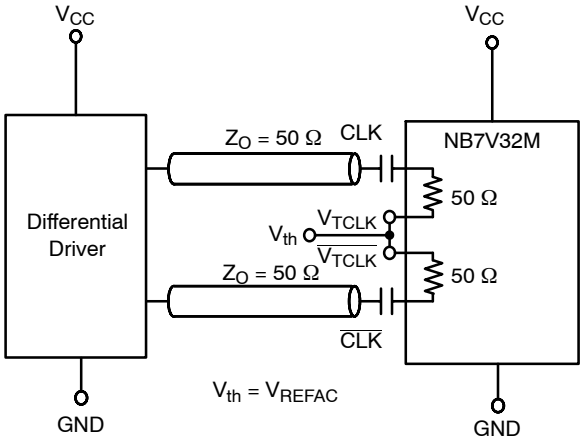

Figure 15. Capacitor−Coupled Differential Interface ($V_{TCLK}/\overline{V_{TCLK}}$ Connected to V_{REFAC}; V_{REFAC} Bypassed to Ground with 0.1 μF Capacitor)

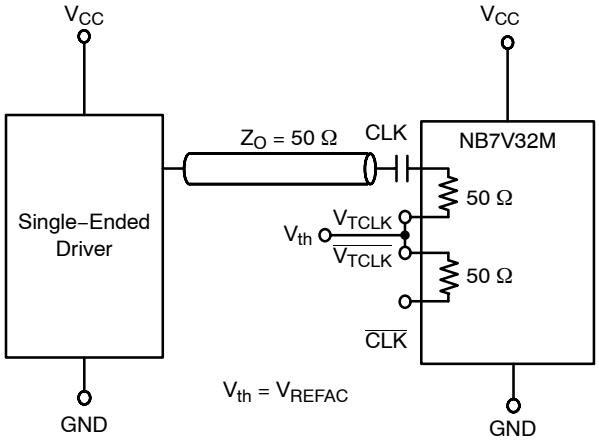

Figure 16. Capacitor−Coupled Single−Ended Interface ($V_{TCLK}/\overline{V_{TCLK}}$ Connected to V_{REFAC}; V_{REFAC} Bypassed to Ground with 0.1 μF Capacitor)

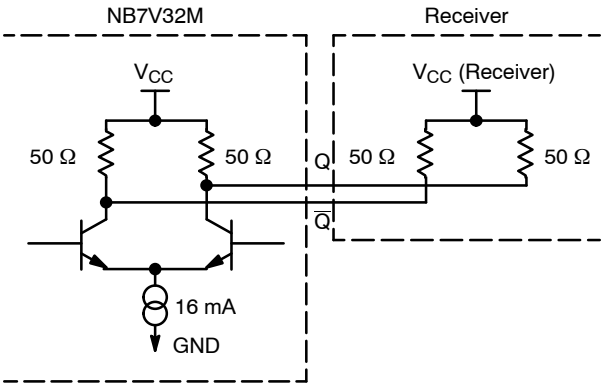

Figure 17. Typical CML Output Structure and Termination

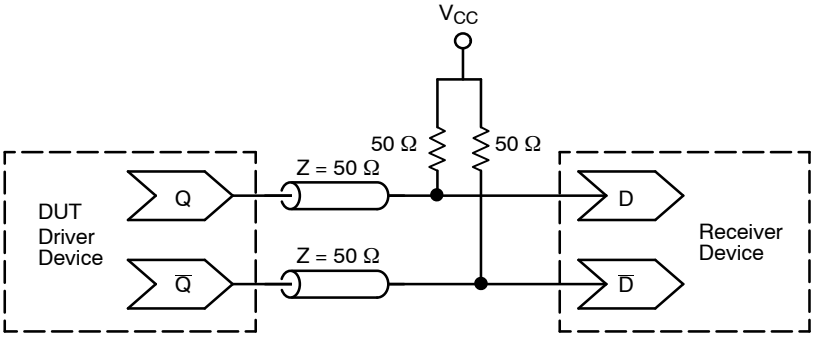

Figure 18. Typical Termination for CML Output Driver and Device Evaluation

ORDERING INFORMATION

Device	Package	Shipping†
NB7V32MMNTXG	QFN−16 (Pb−free)	3,000 / Tape & Reel

†For information on tape and reel specifications, including part orientation and tape sizes, please refer to our Tape and Reel Packaging Specifications Brochure, BRD8011/D.

The products described herein (NB7V32M), may be covered by U.S. patents including 6,362,644. There may be other patents pending.
GigaComm is a trademark of Semiconductor Components Industries, LLC dba “**onsemi**” or its affiliates and/or subsidiaries in the United States and/or other countries.

QFN16 3x3, 0.5P
CASE 485G
ISSUE G

DATE 08 OCT 2021

SCALE 2:1

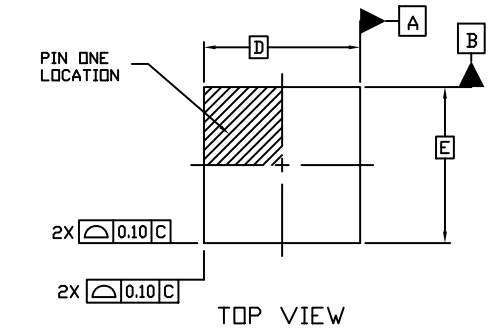

TOP VIEW

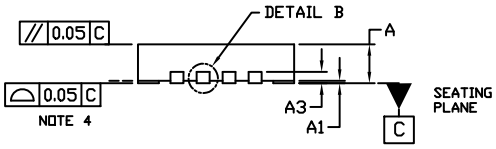

SIDE VIEW

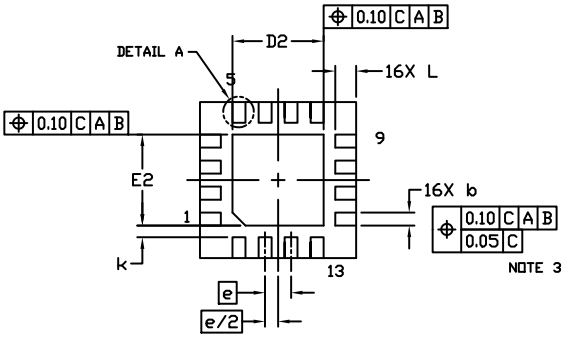

BOTTOM VIEW

NOTES:

1. DIMENSIONING AND TOLERANCING PER ASME Y14.5M, 1994.
2. CONTROLLING DIMENSION: MILLIMETERS
3. DIMENSION b APPLIES TO PLATED TERMINAL AND IS MEASURED BETWEEN 0.15 AND 0.30 MM FROM THE TERMINAL TIP.
4. COPLANARITY APPLIES TO THE EXPOSED PAD AS WELL AS THE TERMINALS.

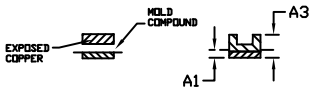

DETAIL B
ALTERNATE CONSTRUCTIONS

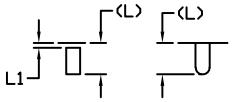

DETAIL A
ALTERNATE TERMINAL CONSTRUCTIONS

DIM	MILLIMETERS		
	MIN.	NOM.	MAX.
A	0.80	0.90	1.00
A1	0.00	0.03	0.05
A3		0.20 REF	
b	0.18	0.24	0.30
D		3.00 BSC	
D2	1.65	1.75	1.85
E		3.00 BSC	
E2	1.65	1.75	1.85
e		0.50 BSC	
k		0.18 TYP	
L	0.30	0.40	0.50
L1	0.00	0.08	0.15

MOUNTING FOOTPRINT

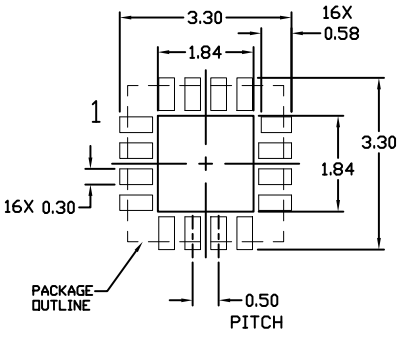

GENERIC MARKING DIAGRAM*



XXXXX = Specific Device Code
A = Assembly Location
L = Wafer Lot
Y = Year
W = Work Week
▪ = Pb−Free Package

(Note: Microdot may be in either location)

*This information is generic. Please refer to device data sheet for actual part marking. Pb−Free indicator, “G” or microdot “▪”, may or may not be present. Some products may not follow the Generic Marking.

DOCUMENT NUMBER:	**98AON04795D**	Electronic versions are uncontrolled except when accessed directly from the Document Repository. Printed versions are uncontrolled except when stamped “CONTROLLED COPY” in red.
DESCRIPTION:	**QFN16 3X3, 0.5P**	**PAGE 1 OF 1**

onsemi and ONSEMI are trademarks of Semiconductor Components Industries, LLC dba **onsemi** or its subsidiaries in the United States and/or other countries. **onsemi** reserves the right to make changes without further notice to any products herein. **onsemi** makes no warranty, representation or guarantee regarding the suitability of its products for any particular purpose, nor does **onsemi** assume any liability arising out of the application or use of any product or circuit, and specifically disclaims any and all liability, including without limitation special, consequential or incidental damages. **onsemi** does not convey any license under its patent rights nor the rights of others.

onsemi, , and other names, marks, and brands are registered and/or common law trademarks of Semiconductor Components Industries, LLC dba "**onsemi**" or its affiliates and/or subsidiaries in the United States and/or other countries. **onsemi** owns the rights to a number of patents, trademarks, copyrights, trade secrets, and other intellectual property. A listing of **onsemi**'s product/patent coverage may be accessed at www.onsemi.com/site/pdf/Patent−Marking.pdf. **onsemi** reserves the right to make changes at any time to any products or information herein, without notice. The information herein is provided "as−is" and **onsemi** makes no warranty, representation or guarantee regarding the accuracy of the information, product features, availability, functionality, or suitability of its products for any particular purpose, nor does **onsemi** assume any liability arising out of the application or use of any product or circuit, and specifically disclaims any and all liability, including without limitation special, consequential or incidental damages. Buyer is responsible for its products and applications using **onsemi** products, including compliance with all laws, regulations and safety requirements or standards, regardless of any support or applications information provided by **onsemi**. "Typical" parameters which may be provided in **onsemi** data sheets and/or specifications can and do vary in different applications and actual performance may vary over time. All operating parameters, including "Typicals" must be validated for each customer application by customer's technical experts. **onsemi** does not convey any license under any of its intellectual property rights nor the rights of others. **onsemi** products are not designed, intended, or authorized for use as a critical component in life support systems or any FDA Class 3 medical devices or medical devices with a same or similar classification in a foreign jurisdiction or any devices intended for implantation in the human body. Should Buyer purchase or use **onsemi** products for any such unintended or unauthorized application, Buyer shall indemnify and hold **onsemi** and its officers, employees, subsidiaries, affiliates, and distributors harmless against all claims, costs, damages, and expenses, and reasonable attorney fees arising out of, directly or indirectly, any claim of personal injury or death associated with such unintended or unauthorized use, even if such claim alleges that **onsemi** was negligent regarding the design or manufacture of the part. **onsemi** is an Equal Opportunity/Affirmative Action Employer. This literature is subject to all applicable copyright laws and is not for resale in any manner.

ADDITIONAL INFORMATION

TECHNICAL PUBLICATIONS:
Technical Library: www.onsemi.com/design/resources/technical−documentation
onsemi Website: www.onsemi.com

ONLINE SUPPORT: www.onsemi.com/support
For additional information, please contact your local Sales Representative at www.onsemi.com/support/sales