3.3 V 1:4 AnyLevel™ Differential Input to LVDS Fanout Buffer/Translator

NB6N14S

The NB6N14S is a differential 1:4 Clock or Data Receiver and will accept AnyLevel™ differential input signals: LVPECL, CML or LVDS. These signals will be translated to LVDS and four identical copies of Clock or Data will be distributed, operating up to 2.0 GHz or 2.5 Gb/s, respectively. As such, the NB6N14S is ideal for SONET, GigE, Fiber Channel, Backplane and other Clock or Data distribution applications.

The NB6N14S has a wide input common mode range from GND + 50 mV to V_{CC} − 50 mV. Combined with the 50 Ω internal termination resistors at the inputs, the NB6N14S is ideal for translating a variety of differential or single−ended Clock or Data signals to 350 mV typical LVDS output levels.

The NB6N14S is offered in a small 3 mm x 3 mm 16−QFN package. Application notes, models, and support documentation are available at *www.onsemi.com*.

The NB6N14S is a member of the ECLinPS MAX™ family of high performance products.

Features

- Maximum Input Clock Frequency > 2.0 GHz
- Maximum Input Data Rate > 2.5 Gb/s
- 1 ps Maximum RMS Clock Jitter
- Typically 10 ps Data Dependent Jitter
- 380 ps Typical Propagation Delay
- 120 ps Typical Rise and Fall Times
- V_{REF_AC} Reference Output
- TIA/EIA − 644 Compliant
- Functionally Compatible with Existing 3.3 V LVEL, LVEP, EP, and SG Devices
- These are Pb−Free Devices

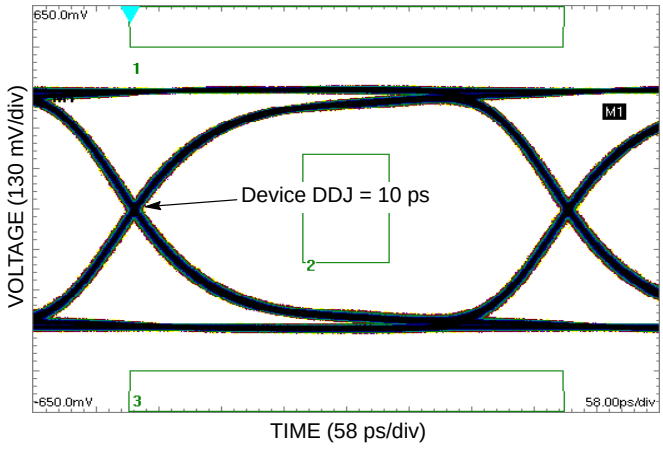

Figure 2. Typical Output Waveform at 2.488 Gb/s with PRBS 2^{23-1} (V_{INPP} = 400 mV; Input Signal DDJ = 14 ps)

MARKING DIAGRAM*



QFN−16
MN SUFFIX
CASE 485G

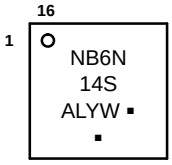

A = Assembly Location
L = Wafer Lot
Y = Year
W = Work Week
▪ = Pb−Free Package

(Note: Microdot may be in either location)

*For additional marking information, refer to Application Note AND8002/D.

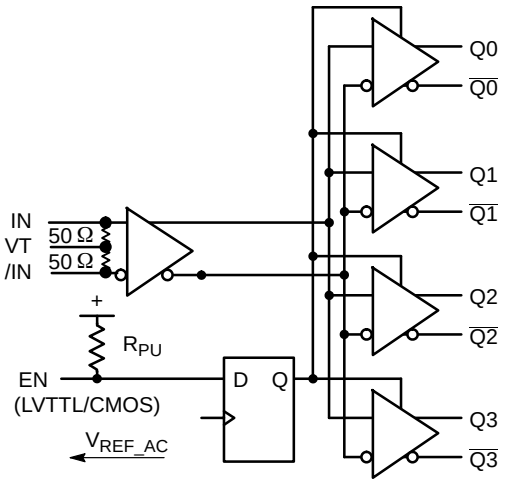

Figure 1. Logic Diagram

ORDERING INFORMATION

See detailed ordering and shipping information in the package dimensions section on page 10 of this data sheet.

© Semiconductor Components Industries, LLC, 2013

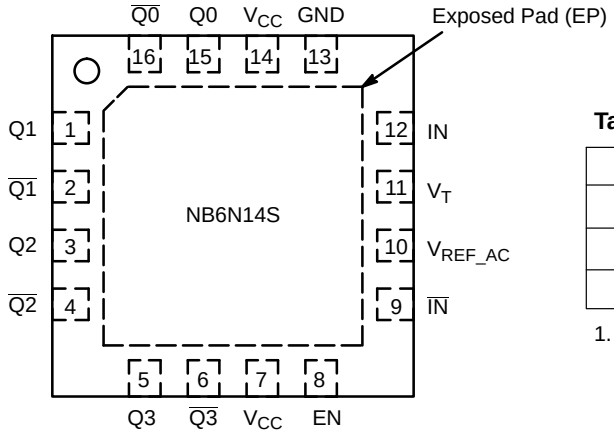

Figure 3. NB6N14S Pinout, 16−pin QFN (Top View)

Table 1. TRUTH TABLE

IN	$\overline{IN}$	EN	Q	$\overline{Q}$
0	1	1	0	1
1	0	1	1	0
x	x	0	0 (Note 1)	1 (Note 1)

1. On next transition of the input signal (IN).

Table 2. PIN DESCRIPTION

Pin	Name	I/O	Description
1	Q1	LVDS Output	Non−inverted IN output. Typically loaded with 100 Ω receiver termination resistor across differential pair.
2	$\overline{Q1}$	LVDS Output	Inverted IN output. Typically loaded with 100 Ω receiver termination resistor across differential pair.
3	Q2	LVDS Output	Non−inverted IN output. Typically loaded with 100 Ω receiver termination resistor across differential pair.
4	$\overline{Q2}$	LVDS Output	Inverted IN output. Typically loaded with 100 Ω receiver termination resistor across differential pair.
5	Q3	LVDS Output	Non−inverted IN output. Typically loaded with 100 Ω receiver termination resistor across differential pair.
6	$\overline{Q3}$	LVDS Output	Inverted IN output. Typically loaded with 100 Ω receiver termination resistor across differential pair.
7	V_{CC}	−	Positive Supply Voltage.
8	EN	LVTTL / LVCMOS Input	Synchronous Output Enable. When LOW, Q outputs will go LOW and Qb outputs will go HIGH on the next negative transition of IN input. The internal DFF register is clocked on the falling edge of IN input; see Figure 23. The EN pin has an internal pullup resistor and defaults HIGH when left open.
9	$\overline{IN}$	LVPECL, CML, LVDS	Inverted Differential Input
10	V_{REF_AC}	LVPECL Output	The V_{REF_AC} reference output can be used to rebias capacitor−coupled differential or single−ended input signals. For the capacitor−coupled IN and/or INb inputs, V_{REF_AC} should be connected to the VT pin and bypassed to ground with a 0.01 μF capacitor.
11	V_T	LVPECL Output	Internal 100 Ω Center−tapped Termination Pin for IN and $\overline{IN}$
12	IN	LVPECL, CML, LVDS	Non−inverted Differential Input. (Note 2)
13	GND	−	Negative Supply Voltage.
14	V_{CC}	−	Positive Supply Voltage.
15	Q0	LVDS Output	Non−inverted IN output. Typically loaded with 100 Ω receiver termination resistor across differential pair.
16	$\overline{Q0}$	LVDS Output	Inverted IN output. Typically loaded with 100 Ω receiver termination resistor across differential pair.
−	EP	−	The Exposed Pad (EP) on the QFN−16 package bottom is thermally connected to the die for improved heat transfer out of package. The exposed pad must be attached to a heat−sinking conduit. The pad is not electrically connected to the die, but is recommended to be electrically and thermally connected to GND on the PC board.

2. In the differential configuration, when the input termination pin (VT) is connected to a termination voltage or left open, and if no signal is applied on IN/$\overline{IN}$ inputs, then the device will be susceptible to self−oscillation.

Table 3. ATTRIBUTES

Characteristics		Value
Moisture Sensitivity (Note 3)		Level 1
Flammability Rating	Oxygen Index: 28 to 34	UL 94 V−0 @ 0.125 in
ESD Protection	Human Body Model Machine Model	> 2 kV > 200 V
EN Input Pullup Resistor − R_{PU}		37 kΩ
Transistor Count		225
Meets or exceeds JEDEC Spec EIA/JESD78 IC Latchup Test		

3. For additional information, see Application Note AND8003/D.

Table 4. MAXIMUM RATINGS

Symbol	Parameter	Condition 1	Condition 2	Rating	Unit
V_{CC}	Positive Power Supply	GND = 0 V		3.8	V
V_{IN}	Positive Input	GND = 0 V	$V_{IN} \le V_{CC}$	3.8	V
I_{IN}	Input Current Through R_T (50 Ω Resistor)	Static Surge		35 70	mA mA
I_{OSC}	Output Short Circuit Current Line−to−Line (Q to $\overline{Q}$) Line−to−End (Q or $\overline{Q}$ to GND) TIA/EIA − 644 Compliant	 Q or $\overline{Q}$ Q to $\overline{Q}$ to GND	 Continuous Continuous	 12 24	mA
I_{REF_AC}	V_{REF_AC} Sink/Source Current			±0.5	mA
T_A	Operating Temperature Range	QFN−16		−40 to +85	°C
T_{stg}	Storage Temperature Range			−65 to +150	°C
θ_{JA}	Thermal Resistance (Junction−to−Ambient) (Note 4)	0 lfpm 500 lfpm	QFN−16 QFN−16	41.6 35.2	°C/W °C/W
θ_{JC}	Thermal Resistance (Junction−to−Case)	1S2P (Note 4)	QFN−16	4.0	°C/W
T_{sol}	Wave Solder Pb−Free			265	°C

Stresses exceeding those listed in the Maximum Ratings table may damage the device. If any of these limits are exceeded, device functionality should not be assumed, damage may occur and reliability may be affected.

4. JEDEC standard multilayer board − 1S2P (1 signal, 2 power) with 8 filled thermal vias under exposed pad.

Table 5. DC CHARACTERISTICS V_{CC} = 3.0 V to 3.6 V, GND = 0 V, T_A = −40°C to +85°C

Symbol	Characteristic	Min	Typ	Max	Unit
I_{CC}	Power Supply Current (Note 9)		65	100	mA
DIFFERENTIAL INPUTS DRIVEN SINGLE−ENDED (Figures 14, 15, 19, and 21)					
V_{th}	Input Threshold Reference Voltage Range (Note 8)	GND +100		V_{CC} − 100	mV
V_{IH}	Single−ended Input HIGH Voltage	V_{th} + 100		V_{CC}	mV
V_{IL}	Single−ended Input LOW Voltage	GND		V_{th} − 100	mV
V_{REF_AC}	Reference Output Voltage (Note 11)	V_{CC} − 1.600	V_{CC} − 1.425	V_{CC} − 1.300	V
DIFFERENTIAL INPUTS DRIVEN DIFFERENTIALLY (Figures 10, 11, 12, 13, 20, and 22)					
V_{IHD}	Differential Input HIGH Voltage	100		V_{CC}	mV
V_{ILD}	Differential Input LOW Voltage	GND		V_{CC} − 100	mV
V_{CMR}	Input Common Mode Range (Differential Configuration)	GND + 50		V_{CC} − 50	mV
V_{ID}	Differential Input Voltage (V_{IHD} − V_{ILD})	100		V_{CC}	mV
R_{TIN}	Internal Input Termination Resistor	40	50	60	Ω
LVDS OUTPUTS (Note 5)					
V_{OD}	Differential Output Voltage	250		450	mV
ΔV_{OD}	Change in Magnitude of V_{OD} for Complementary Output States (Note 10)	0	1	25	mV
V_{OS}	Offset Voltage (Figure 18)	1125		1375	mV
ΔV_{OS}	Change in Magnitude of V_{OS} for Complementary Output States (Note 10)	0	1	25	mV
V_{OH}	Output HIGH Voltage (Note 6)		1425	1600	mV
V_{OL}	Output LOW Voltage (Note 7)	900	1075		mV
LVTTL/LVCMOS INPUTS					
V_{IH}	Input HIGH Voltage (Note 7, 8)	2.0		V_{CC}	V
V_{IL}	Input LOW Voltage (Note 7, 8)	GND		0.8	V
I_{IH}	Input HIGH Current	−150		150	μA
I_{IL}	Input LOW Current	−150		150	μA

NOTE: Device will meet the specifications after thermal equilibrium has been established when mounted in a test socket or printed circuit board with maintained transverse airflow greater than 500 lfpm.

5. LVDS outputs require 100 Ω receiver termination resistor between differential pair. See Figure 17.
6. V_{OH}max = V_{OS}max + ½ V_{OD}max.
7. V_{OL}max = V_{OS}min − ½ V_{OD}max.
8. V_{th} is applied to the complementary input when operating in single−ended mode.
9. Input termination pins open, D/$\overline{D}$ at the DC level within V_{CMR} and output pins loaded with R_L = 100 Ω across differential.
10. Parameter guaranteed by design verification not tested in production.
11. V_{REF_AC} used to rebias capacitor−coupled inputs only (see Figures 14 and 15).

Table 6. AC CHARACTERISTICS V_{CC} = 3.0 V to 3.6 V, GND = 0 V; (Note 12)

Symbol	Characteristic	−40°C			25°C			85°C			Unit
		Min	Typ	Max	Min	Typ	Max	Min	Typ	Max	
f_{inMax}	Maximum Input Clock Frequency	2.0			2.0			2.0			GHz
V_{OUTPP}	Output Voltage Amplitude (@ $V_{INPPmin}$) (Figure 4) $f_{in} \le 1.0$ GHz f_{in}= 1.5 GHz f_{in}= 2.0 GHz	220 200 170	350 300 270		220 200 170	350 300 270		220 200 170	350 300 270		mV
f_{DATA}	Maximum Operating Data Rate	1.5	2.5		1.5	2.5		1.5	2.5		Gb/s
t_{PLH}, t_{PHL}	Differential Input to Differential Output Propagation Delay	300	450	600	300	450	600	300	450	600	ps
t_s t_h	Setup Time Hold Time	300 500	60 70		300 500	60 70		300 500	60 70		
t_{SKEW}	Within Device Skew (Note 17) Device−to−Device Skew (Note 16)		5 30	20 200		5 30	20 200		5 30	20 200	ps
t_{JITTER}	RMS Random Clock Jitter (Note 14) f_{in} = 1.0 GHz f_{in} = 1.5 GHz Deterministic Jitter (Note 15) f_{DATA} = 622 Mb/s f_{DATA} = 1.5 Gb/s f_{DATA} = 2.488 Gb/s		0.5 0.5 6.0 7.0 10	1.0 1.0 20 20 20		0.5 0.5 6.0 7.0 10	1.0 1.0 20 20 20		0.5 0.5 6.0 7.0 10	1.0 1.0 20 20 20	ps
V_{INPP}	Input Voltage Swing/Sensitivity (Differential Configuration) (Note 13)	100		V_{CC}− GND	100		V_{CC}− GND	100		V_{CC}− GND	mV
t_r t_f	Output Rise/Fall Times @ 250 MHz (20% − 80%) Q, $\overline{Q}$	60	120	190	60	120	190	60	120	190	ps

NOTE: Device will meet the specifications after thermal equilibrium has been established when mounted in a test socket or printed circuit board with maintained transverse airflow greater than 500 lfpm.

12. Measured by forcing $V_{INPPmin}$ with 50% duty cycle clock source and V_{CC} − 1400 mV offset. All loading with an external R_L = 100 Ω. Input edge rates 150 ps (20%−80%). See Figure 17.
13. Input voltage swing is a single−ended measurement operating in differential mode.
14. RMS jitter with 50% Duty Cycle clock signal at 750 MHz.
15. Deterministic jitter with input NRZ data at PRBS 2^{23}−1 and K28.5.
16. Skew is measured between outputs under identical transition @ 250 MHz.
17. The worst case condition between Q0/$\overline{Q0}$ and Q1/$\overline{Q1}$ from either D0/$\overline{D0}$ or D1/$\overline{D1}$, when both outputs have the same transition.

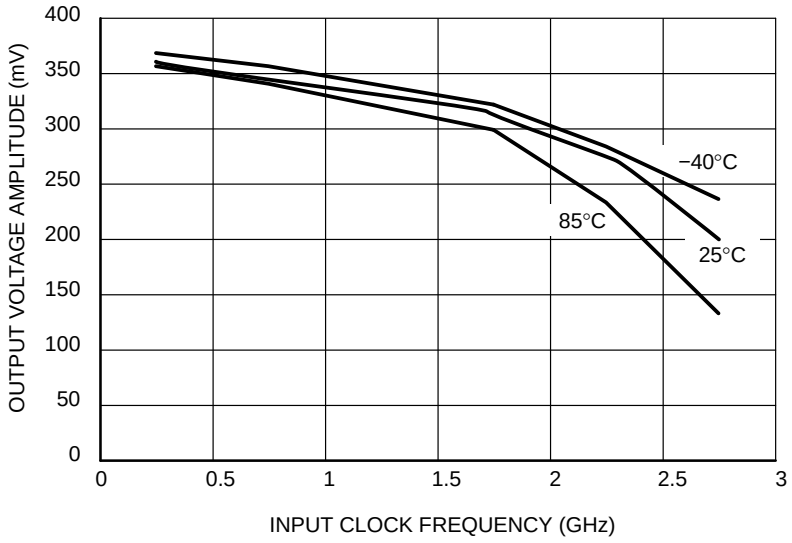

Figure 4. Output Voltage Amplitude (V_{OUTPP}) versus Input Clock Frequency (f_{in}) and Temperature (@ V_{CC} = 3.3 V)

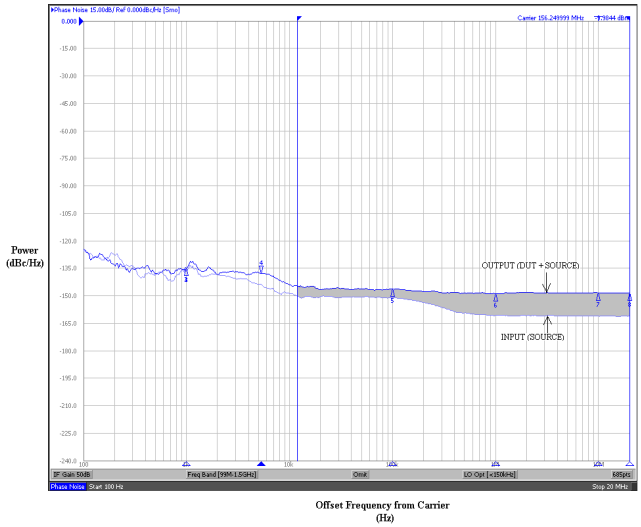

Figure 5. Typical Phase Noise Plot at $f_{carrier}$ = 156.25 MHz

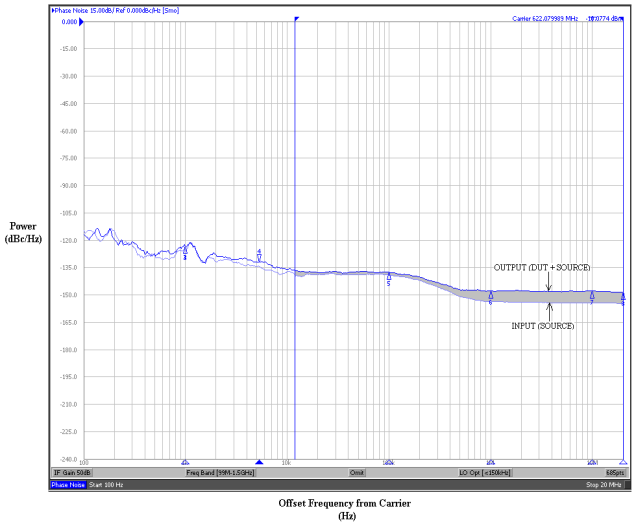

Figure 6. Typical Phase Noise Plot at $f_{carrier}$ = 622.08 MHz

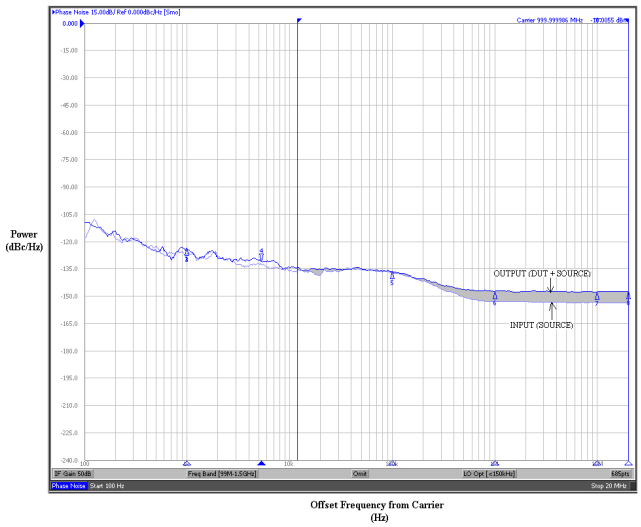

Figure 7. Typical Phase Noise Plot at $f_{carrier}$ = 1 GHz

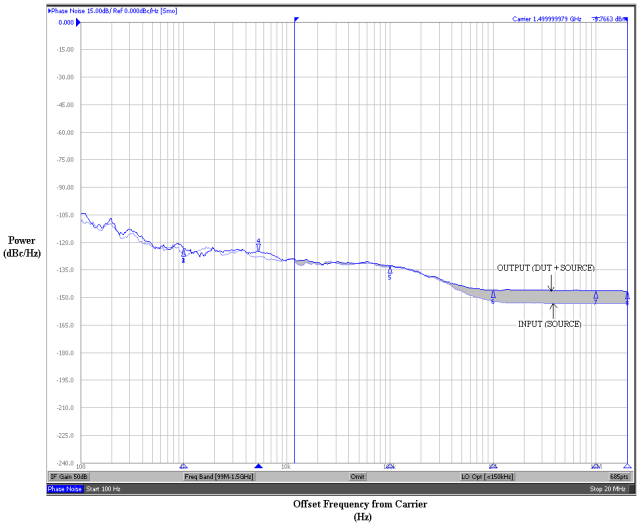

Figure 8. Typical Phase Noise Plot at $f_{carrier}$ = 1.5 GHz

The above phase noise plots captured using Agilent E5052A show additive phase noise of the NB6N14S device at frequencies 156.25 MHz, 622.08 MHz, 1 GHz and 1.5 GHz respectively at an operating voltage of 3.3 V in room temperature. The RMS Phase Jitter contributed by the device (integrated between 12 kHz and 20 MHz; as shown in the shaded region of the plot) at each of the frequencies is 182 fs, 31 fs, 20 fs and 15 fs respectively. The input source used for the phase noise measurements is Agilent E8663B.

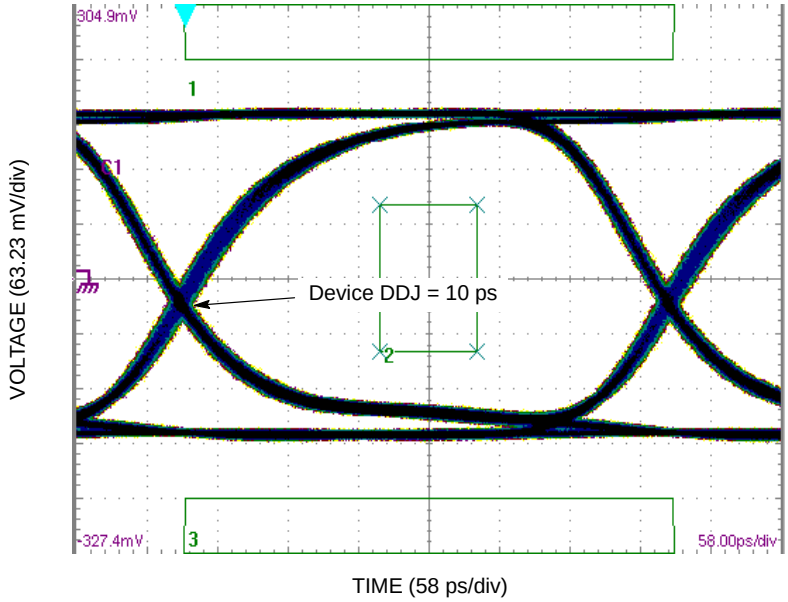

Figure 9. Typical Output Waveform at 2.488 Gb/s with PRBS 2^{23-1} and OC48 mask (V_{INPP} = 100 mV; Input Signal DDJ = 14 ps)

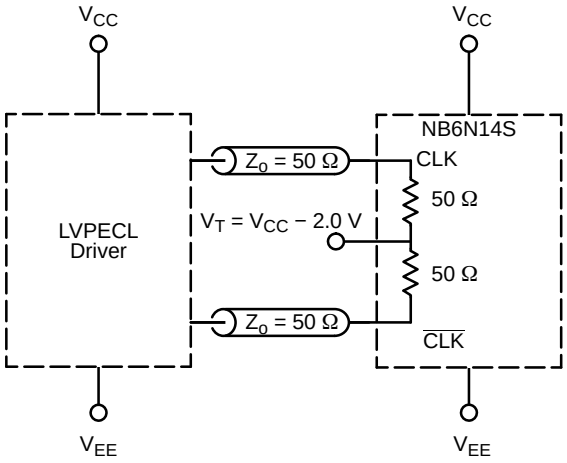

Figure 10. LVPECL Interface

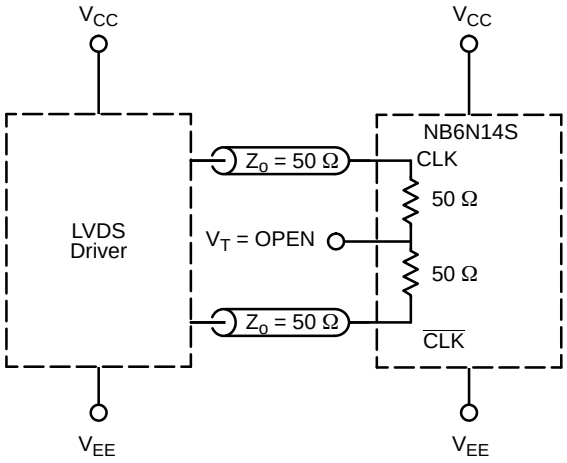

Figure 11. LVDS Interface

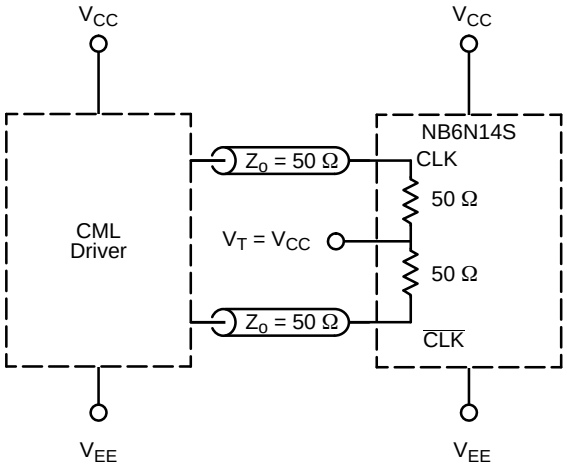

Figure 12. Standard 50 Ω Load CML Interface

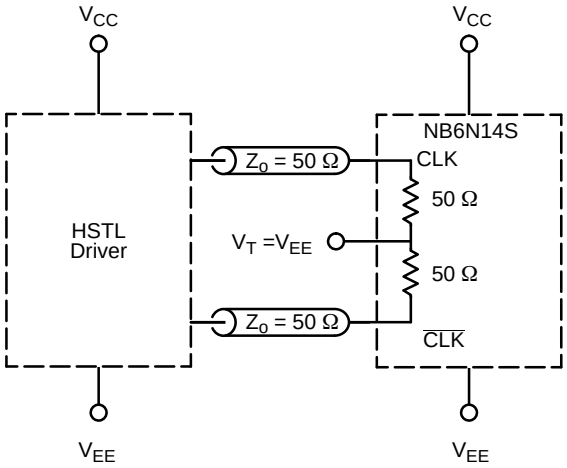

Figure 13. Standard 50 Ω Load HSTL Interface

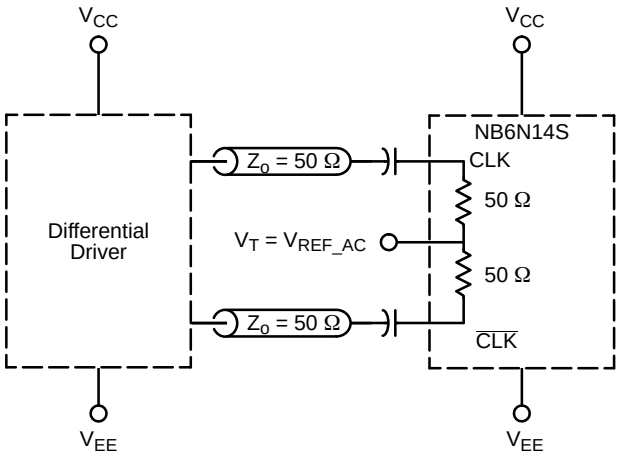

Figure 14. Capacitor−Coupled Differential Interface (V_T Connected to V_{REF_AC})

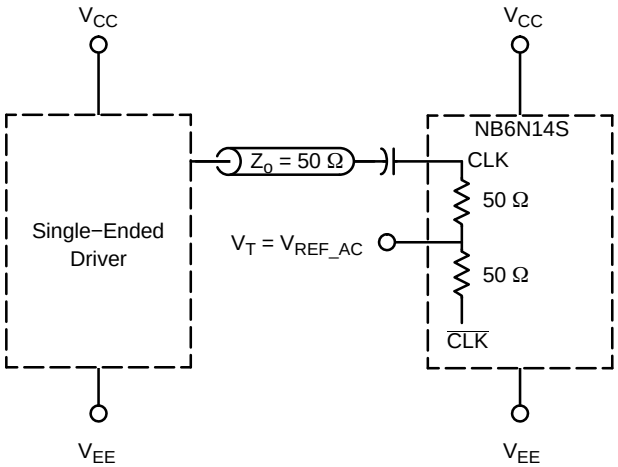

Figure 15. Capacitor−Coupled Single−Ended Interface (V_T Connected to V_{REF_AC})

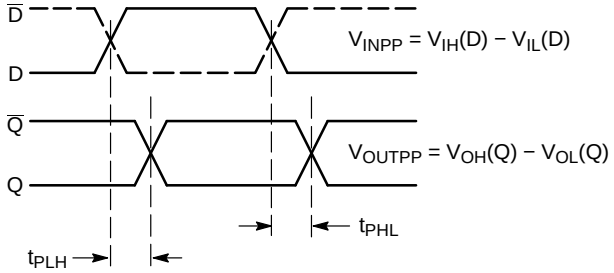

Figure 16. AC Reference Measurement

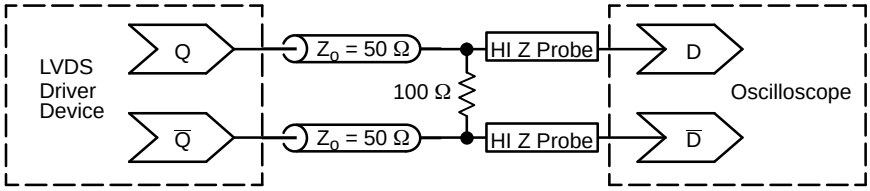

Figure 17. Typical LVDS Termination for Output Driver and Device Evaluation

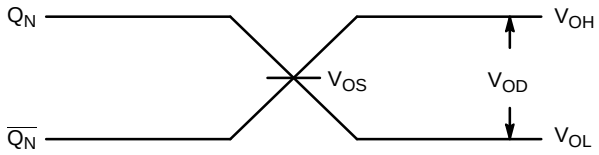

Figure 18. LVDS Output

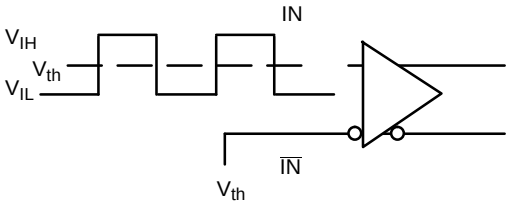

Figure 19. Differential Input Driven Single−Ended

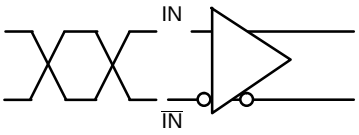

Figure 20. Differential Inputs Driven Differentially

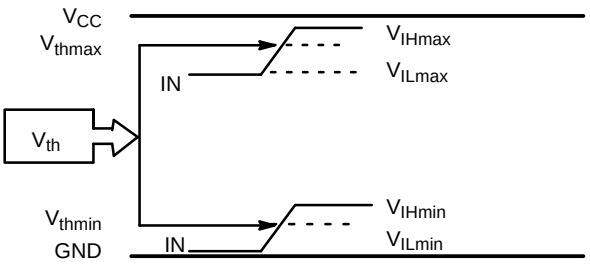

Figure 21. V_{th} Diagram

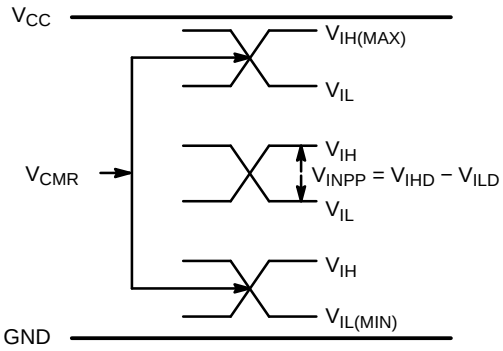

Figure 22. V_{CMR} Diagram

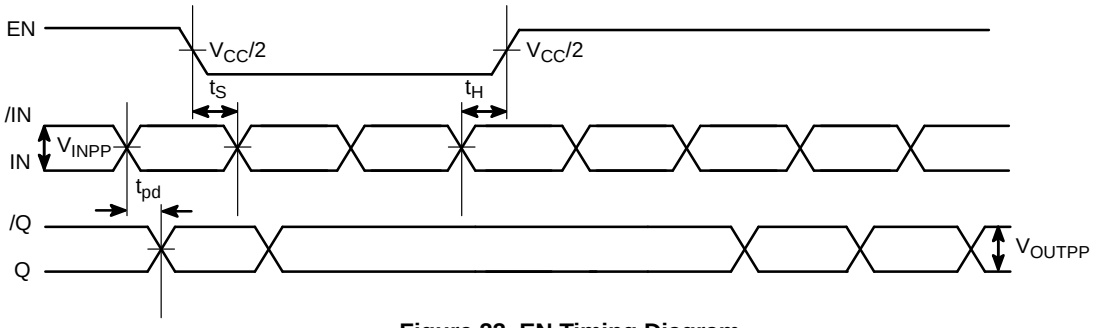

Figure 23. EN Timing Diagram

ORDERING INFORMATION

Device	Package	Shipping†
NB6N14SMNG	QFN−16, 3 X 3 mm (Pb−Free)	123 Units / Rail
NB6N14SMNR2G	QFN−16, 3 X 3 mm (Pb−Free)	3000 / Tape & Reel

†For information on tape and reel specifications, including part orientation and tape sizes, please refer to our Tape and Reel Packaging Specifications Brochure, BRD8011/D.

AnyLevel and ECLinPS MAX are trademarks of Semiconductor Components Industries, LLC (SCILLC).

QFN16 3x3, 0.5P
CASE 485G
ISSUE G

DATE 08 OCT 2021

SCALE 2:1

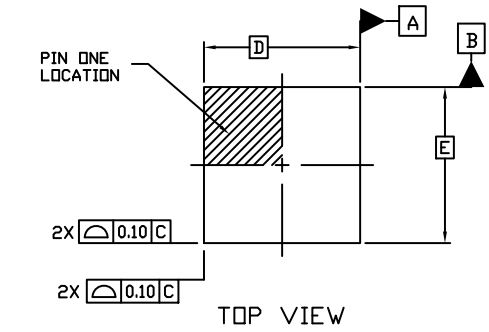

TOP VIEW

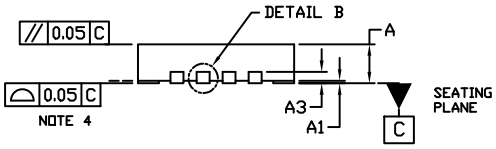

SIDE VIEW

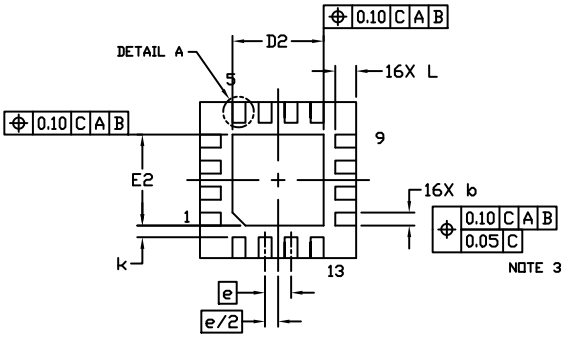

BOTTOM VIEW

NOTES:

1. DIMENSIONING AND TOLERANCING PER ASME Y14.5M, 1994.
2. CONTROLLING DIMENSION: MILLIMETERS
3. DIMENSION b APPLIES TO PLATED TERMINAL AND IS MEASURED BETWEEN 0.15 AND 0.30 MM FROM THE TERMINAL TIP.
4. COPLANARITY APPLIES TO THE EXPOSED PAD AS WELL AS THE TERMINALS.

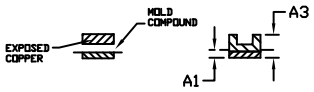

DETAIL B
ALTERNATE CONSTRUCTIONS

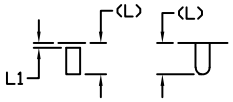

DETAIL A
ALTERNATE TERMINAL CONSTRUCTIONS

DIM	MILLIMETERS		
	MIN.	NOM.	MAX.
A	0.80	0.90	1.00
A1	0.00	0.03	0.05
A3		0.20 REF	
b	0.18	0.24	0.30
D		3.00 BSC	
D2	1.65	1.75	1.85
E		3.00 BSC	
E2	1.65	1.75	1.85
e		0.50 BSC	
k		0.18 TYP	
L	0.30	0.40	0.50
L1	0.00	0.08	0.15

MOUNTING FOOTPRINT

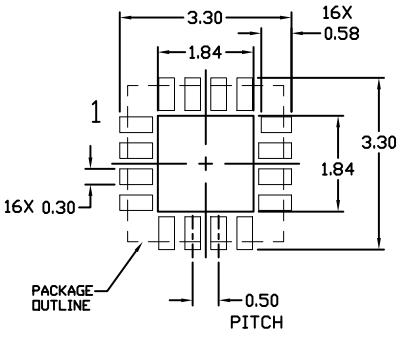

GENERIC MARKING DIAGRAM*



XXXXX = Specific Device Code
A = Assembly Location
L = Wafer Lot
Y = Year
W = Work Week
▪ = Pb−Free Package

(Note: Microdot may be in either location)

*This information is generic. Please refer to device data sheet for actual part marking. Pb−Free indicator, “G” or microdot “▪”, may or may not be present. Some products may not follow the Generic Marking.

DOCUMENT NUMBER:	**98AON04795D**	Electronic versions are uncontrolled except when accessed directly from the Document Repository. Printed versions are uncontrolled except when stamped “CONTROLLED COPY” in red.
DESCRIPTION:	**QFN16 3X3, 0.5P**	**PAGE 1 OF 1**

onsemi and ONSEMI are trademarks of Semiconductor Components Industries, LLC dba **onsemi** or its subsidiaries in the United States and/or other countries. **onsemi** reserves the right to make changes without further notice to any products herein. **onsemi** makes no warranty, representation or guarantee regarding the suitability of its products for any particular purpose, nor does **onsemi** assume any liability arising out of the application or use of any product or circuit, and specifically disclaims any and all liability, including without limitation special, consequential or incidental damages. **onsemi** does not convey any license under its patent rights nor the rights of others.

onsemi, , and other names, marks, and brands are registered and/or common law trademarks of Semiconductor Components Industries, LLC dba "**onsemi**" or its affiliates and/or subsidiaries in the United States and/or other countries. **onsemi** owns the rights to a number of patents, trademarks, copyrights, trade secrets, and other intellectual property. A listing of **onsemi**'s product/patent coverage may be accessed at www.onsemi.com/site/pdf/Patent−Marking.pdf. **onsemi** reserves the right to make changes at any time to any products or information herein, without notice. The information herein is provided "as−is" and **onsemi** makes no warranty, representation or guarantee regarding the accuracy of the information, product features, availability, functionality, or suitability of its products for any particular purpose, nor does **onsemi** assume any liability arising out of the application or use of any product or circuit, and specifically disclaims any and all liability, including without limitation special, consequential or incidental damages. Buyer is responsible for its products and applications using **onsemi** products, including compliance with all laws, regulations and safety requirements or standards, regardless of any support or applications information provided by **onsemi**. "Typical" parameters which may be provided in **onsemi** data sheets and/or specifications can and do vary in different applications and actual performance may vary over time. All operating parameters, including "Typicals" must be validated for each customer application by customer's technical experts. **onsemi** does not convey any license under any of its intellectual property rights nor the rights of others. **onsemi** products are not designed, intended, or authorized for use as a critical component in life support systems or any FDA Class 3 medical devices or medical devices with a same or similar classification in a foreign jurisdiction or any devices intended for implantation in the human body. Should Buyer purchase or use **onsemi** products for any such unintended or unauthorized application, Buyer shall indemnify and hold **onsemi** and its officers, employees, subsidiaries, affiliates, and distributors harmless against all claims, costs, damages, and expenses, and reasonable attorney fees arising out of, directly or indirectly, any claim of personal injury or death associated with such unintended or unauthorized use, even if such claim alleges that **onsemi** was negligent regarding the design or manufacture of the part. **onsemi** is an Equal Opportunity/Affirmative Action Employer. This literature is subject to all applicable copyright laws and is not for resale in any manner.

ADDITIONAL INFORMATION

TECHNICAL PUBLICATIONS:
Technical Library: www.onsemi.com/design/resources/technical−documentation
onsemi Website: www.onsemi.com

ONLINE SUPPORT: www.onsemi.com/support
For additional information, please contact your local Sales Representative at www.onsemi.com/support/sales