3.3 V, 2.5 Gb/s Dual AnyLevel™ to LVDS Receiver/Driver/Buffer/ Translator with Internal Input Termination

NB4N527S

NB4N527S is a clock or data Receiver/Driver/Buffer/Translator capable of translating AnyLevel™ input signal (LVPECL, CML, HSTL, LVDS, or LVTTL/LVCMOS) to LVDS. Depending on the distance, noise immunity of the system design, and transmission line media, this device will receive, drive or translate data or clock signals up to 2.5 Gb/s or 1.5 GHz, respectively.

The NB4N527S has a wide input common mode range of GND + 50 mV to V_{CC} − 50 mV combined with two 50 Ω internal termination resistors is ideal for translating differential or single−ended data or clock signals to 350 mV typical LVDS output levels without use of any additional external components (Figure 6).

The device is offered in a small 3 mm x 3 mm QFN−16 package. NB4N527S is targeted for data, wireless and telecom applications as well as high speed logic interface where jitter and package size are main requirements. Application notes, models, and support documentation are available on www.onsemi.com.

- Maximum Input Clock Frequency up to 1.5 GHz
- Maximum Input Data Rate up to 2.5 Gb/s (Figure 5)
- 470 ps Maximum Propagation Delay\
- 1 ps Maximum RMS Jitter
- 140 ps Maximum Rise/Fall Times
- Single Power Supply; V_{CC} = 3.3 V ±10%
- Temperature Compensated TIA/EIA−644 Compliant LVDS Outputs
- Internal 50 Ω Termination Resistor per Input Pin
- GND + 50 mV to V_{CC} − 50 mV V_{CMR} Range
- These are Pb−Free Devices

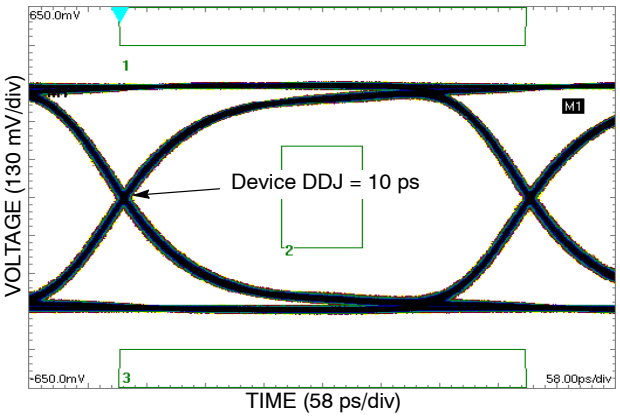

Figure 2. Typical Output Waveform at 2.488 Gb/s with PRBS 2^{23-1} (V_{INPP} = 400 mV; Input Signal DDJ = 14 ps)

MARKING DIAGRAM*

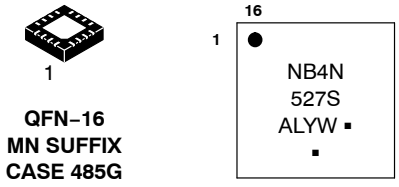

1

QFN−16
MN SUFFIX
CASE 485G

A	= Assembly Location
L	= Wafer Lot
Y	= Year
W	= Work Week
▪	= Pb−Free Package

(Note: Microdot may be in either location)

*For additional marking information, refer to Application Note AND8002/D.

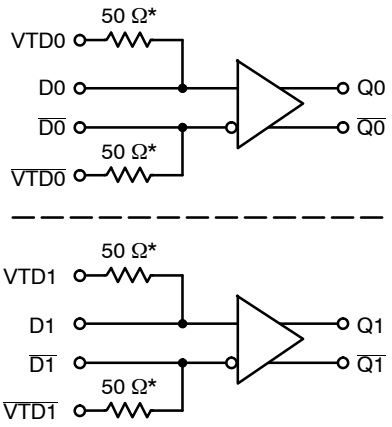

Figure 1. Functional Block Diagram

*R_{TIN}

ORDERING INFORMATION

See detailed ordering and shipping information in the package dimensions section on page 9 of this data sheet.

© Semiconductor Components Industries, LLC, 2011

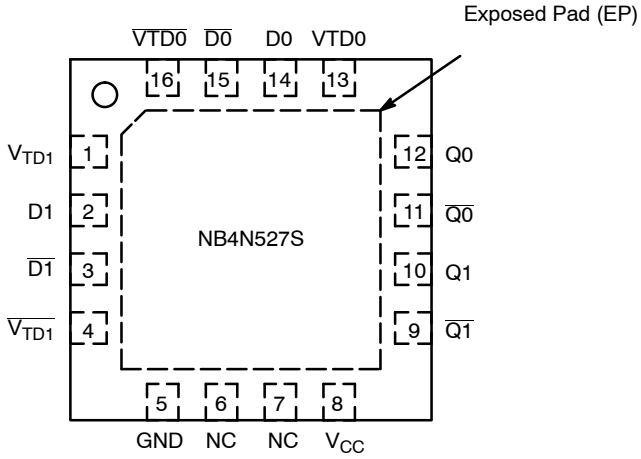

Figure 3. Pin Configuration (Top View)

Table 1. PIN DESCRIPTION

Pin	Name	I/O	Description
1	VTD1	–	Internal 50 Ω termination pin for D1. (R_{TIN})
2	D1	LVPECL, CML, LVDS, LVCMOS, LVTTL, HSTL	Noninverted differential clock/data D1 input (Note 1).
3	$\overline{D1}$	LVPECL, CML, LVDS, LVCMOS, LVTTL, HSTL	Inverted differential clock/data $\overline{D1}$ input (Note 1).
4	$\overline{VTD1}$	–	Internal 50 Ω termination pin for $\overline{D1}$. (R_{TIN})
5	GND	–	0 V. Ground.
6, 7	NC		No connect.
8	V_{CC}		Positive Supply Voltage.
9	$\overline{Q1}$	LVDS Output	Inverted D1 output. Typically loaded with 100 Ω receiver termination resistor across differential pair.
10	Q1	LVDS Output	Noninverted D1 output. Typically loaded with 100 Ω receiver termination resistor across differential pair.
11	$\overline{Q0}$	LVDS Output	Inverted D0 output. Typically loaded with 100 Ω receiver termination resistor across differential pair.
12	Q0	LVDS Output	Noninverted D0 output. Typically loaded with 100 Ω receiver termination resistor across differential pair.
13	VTD0	–	Internal 50 Ω termination pin for D0.
14	D0	LVPECL, CML, LVDS, LVCMOS, LVTTL, HSTL	Noninverted differential clock/data D0 input (Note 1).
15	$\overline{D0}$	LVPECL, CML, LVDS, LVCMOS, LVTTL, HSTL	Inverted differential clock/data $\overline{D0}$ input (Note 1).
16	$\overline{VTD0}$	–	Internal 50 Ω termination pin for $\overline{D0}$.
EP			Exposed pad. EP on the package bottom is thermally connected to the die improved heat transfer out of package. The pad is not electrically connected to the die, but is recommended to be soldered to GND on the PCB.

1. In the differential configuration when the input termination pins(VTD0/$\overline{VTD0}$, VTD1/ $\overline{VTD1}$) are connected to a common termination voltage or left open, and if no signal is applied on D0/$\overline{D0}$, D1/$\overline{D1}$ input, then the device will be susceptible to self−oscillation.

Share Feedback
Your Opinion Matters

Table 2. ATTRIBUTES

Characteristics		Value
Moisture Sensitivity (Note 2)		Level 1
Flammability Rating	Oxygen Index: 28 to 34	UL 94 V−0 @ 0.125 in
ESD Protection	Human Body Model Machine Model Charged Device Model	> 2 kV > 200 V > 1 kV
Transistor Count		281
Meets or exceeds JEDEC Spec EIA/JESD78 IC Latchup Test		

2. For additional information, see Application Note AND8003/D.

Table 3. MAXIMUM RATINGS

Symbol	Parameter	Condition 1	Condition 2	Rating	Unit
V_{CC}	Positive Power Supply	GND = 0 V		3.8	V
V_I	Positive Input	GND = 0 V	$V_I = V_{CC}$	3.8	V
I_{IN}	Input Current Through R_T (50 Ω Resistor)	Static Surge		35 70	mA mA
I_{OSC}	Output Short Circuit Current Line−to−Line (Q to $\overline{Q}$) Line−to−End (Q or $\overline{Q}$ to GND)	 Q or $\overline{Q}$ to GND Q to $\overline{Q}$	 Continuous Continuous	 12 24	mA
T_A	Operating Temperature Range	QFN−16		−40 to +85	°C
T_{stg}	Storage Temperature Range			−65 to +150	°C
θ_{JA}	Thermal Resistance (Junction−to−Ambient) (Note 3)	0 lfpm 500 lfpm	QFN−16 QFN−16	41.6 35.2	°C/W °C/W
θ_{JC}	Thermal Resistance (Junction−to−Case)	1S2P (Note 3)	QFN−16	4.0	°C/W
T_{sol}	Wave Solder Pb Pb−Free			265 265	°C

Stresses exceeding those listed in the Maximum Ratings table may damage the device. If any of these limits are exceeded, device functionality should not be assumed, damage may occur and reliability may be affected.

3. JEDEC standard multilayer board − 1S2P (1 signal, 2 power) with 8 filled thermal vias under exposed pad.

Share Feedback
Your Opinion Matters

Table 4. DC CHARACTERISTICS, CLOCK INPUTS, LVDS OUTPUTS V_{CC} = 3.0 V to 3.6 V, GND = 0 V, T_A = −40°C to +85°C

Symbol	Characteristic	Min	Typ	Max	Unit
I_{CC}	Power Supply Current (Note 8)		40	53	mA
DIFFERENTIAL INPUTS DRIVEN SINGLE−ENDED (Figures 11, 12, 16, and 18)					
V_{th}	Input Threshold Reference Voltage Range (Note 7)	GND +100		V_{CC} − 100	mV
V_{IH}	Single−ended Input HIGH Voltage	V_{th} + 100		V_{CC}	mV
V_{IL}	Single−ended Input LOW Voltage	GND		V_{th} − 100	mV
DIFFERENTIAL INPUTS DRIVEN DIFFERENTIALLY (Figures 7, 8, 9, 10, 17, and 19)					
V_{IHD}	Differential Input HIGH Voltage	100		V_{CC}	mV
V_{ILD}	Differential Input LOW Voltage	GND		V_{CC} − 100	mV
V_{CMR}	Input Common Mode Range (Differential Configuration)	GND + 50		V_{CC} − 50	mV
V_{ID}	Differential Input Voltage (V_{IHD} − V_{ILD})	100		V_{CC}	mV
R_{TIN}	Internal Input Termination Resistor	40	50	60	Ω
LVDS OUTPUTS (Note 4)					
V_{OD}	Differential Output Voltage	250		450	mV
ΔV_{OD}	Change in Magnitude of V_{OD} for Complementary Output States (Note 9)	0	1	25	mV
V_{OS}	Offset Voltage (Figure 15)	1125		1375	mV
ΔV_{OS}	Change in Magnitude of V_{OS} for Complementary Output States (Note 9)	0	1	25	mV
V_{OH}	Output HIGH Voltage (Note 5)		1425	1600	mV
V_{OL}	Output LOW Voltage (Note 6)	900	1075		mV

NOTE: Device will meet the specifications after thermal equilibrium has been established when mounted in a test socket or printed circuit board with maintained transverse airflow greater than 500 lfpm.

4. LVDS outputs require 100 Ω receiver termination resistor between differential pair. See Figure 14.
5. V_{OH}max = V_{OS}max + ½ V_{OD}max.
6. V_{OL}max = V_{OS}min − ½ V_{OD}max.
7. V_{th} is applied to the complementary input when operating in single−ended mode.
8. Input termination pins open, Dx/$\overline{Dx}$ at the DC level within V_{CMR} and output pins loaded with R_L = 100 Ω across differential.
9. Parameter guaranteed by design verification not tested in production.

Share Feedback
Your Opinion Matters

Table 5. AC CHARACTERISTICS V_{CC} = 3.0 V to 3.6 V, GND = 0 V; (Note 10)

Symbol	Characteristic	−40°C			25°C			85°C			Unit
		Min	Typ	Max	Min	Typ	Max	Min	Typ	Max	
V_{OUTPP}	Output Voltage Amplitude (@ $V_{INPPmin}$) $f_{in} \le 1.0$ GHz (Figure 4) $f_{in} = 1.5$ GHz	220 200	350 300		220 200	350 300		220 200	350 300		mV
f_{DATA}	Maximum Operating Data Rate	1.5	2.5		1.5	2.5		1.5	2.5		Gb/s
t_{PLH}, t_{PHL}	Differential Input to Differential Output Propagation Delay	270	370	470	270	370	470	270	370	470	ps
t_{SKEW}	Duty Cycle Skew (Note 11) Within Device Skew (Note 17) Device−to−Device Skew (Note 15)		8 5 30	45 25 100		8 5 30	45 25 100		8 5 30	45 25 100	ps
t_{JITTER}	RMS Random Clock Jitter (Note 13) f_{in} = 1.0 GHz f_{in} = 1.5 GHz Deterministic Jitter (Note 14) f_{DATA} = 622 Mb/s f_{DATA} = 1.5 Gb/s f_{DATA} = 2.488 Gb/s Crosstalk Induced Jitter (Note 16)		0.5 0.5 6 7 10 20	1 1 20 20 25 40		0.5 0.5 6 7 10 20	1 1 20 20 25 40		0.5 0.5 6 7 10 20	1 1 20 20 25 40	ps
V_{INPP}	Input Voltage Swing/Sensitivity (Differential Configuration) (Note 12)	100		V_{CC}− GND	100		V_{CC}− GND	100		V_{CC}− GND	mV
t_r t_f	Output Rise/Fall Times @ 250 MHz (20% − 80%) Q, $\overline{Q}$	60	100	140	60	100	140	60	100	140	ps

NOTE: Device will meet the specifications after thermal equilibrium has been established when mounted in a test socket or printed circuit board with maintained transverse airflow greater than 500 lfpm.

10. Measured by forcing $V_{INPPmin}$ with 50% duty cycle clock source and V_{CC} − 1400 mV offset. All loading with an external R_L = 100 Ω across "D" and "$\overline{D}$" of the receiver. Input edge rates 150 ps (20%−80%).
11. See Figure 13 differential measurement of $t_{skew} = |t_{PLH} - t_{PHL}|$ for a nominal 50% differential clock input waveform @ 250 MHz.
12. Input voltage swing is a single−ended measurement operating in differential mode.
13. RMS jitter with 50% duty cycle input clock signal.
14. Deterministic jitter with input NRZ data at PRBS 2^{23}−1 and K28.5.
15. Skew is measured between outputs under identical transition @ 250 MHz.
16. Crosstalk induced jitter is the additive deterministic jitter to channel one with channel two active both running at 622 Gb/s PRBS 2^{23} −1 as an asynchronous signals.
17. The worst case condition between Q0/$\overline{Q0}$ and Q1/$\overline{Q1}$ from either D0/$\overline{D0}$ or D1/$\overline{D1}$, when both outputs have the same transition.

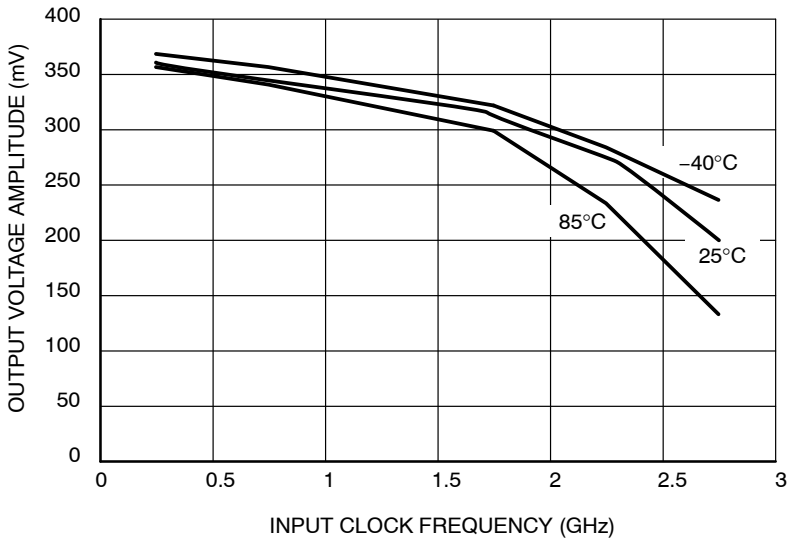

Figure 4. Output Voltage Amplitude (V_{OUTPP}) versus Input Clock Frequency (f_{in}) and Temperature (@ V_{CC} = 3.3 V)

Share Feedback
Your Opinion Matters

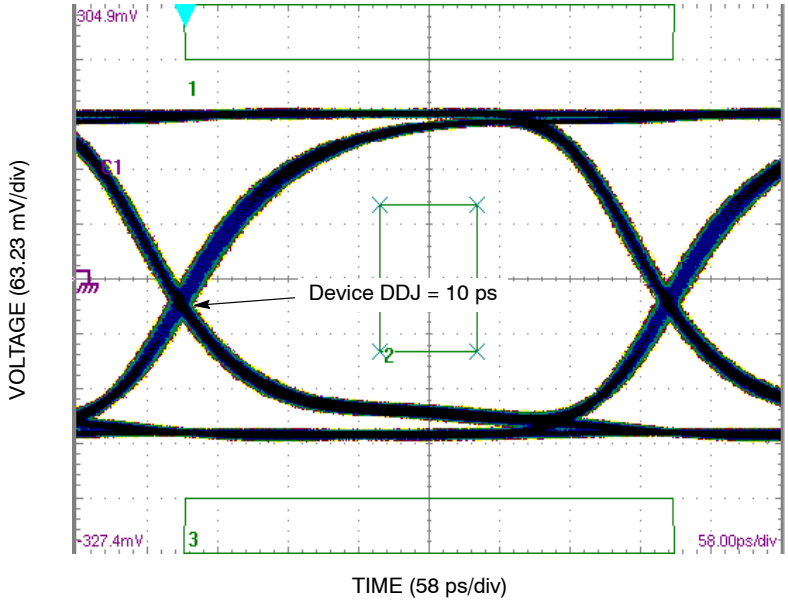

Figure 5. Typical Output Waveform at 2.488 Gb/s with PRBS 2^{23-1} and OC48 mask (V_{INPP} = 100 mV; Input Signal DDJ = 14 ps)

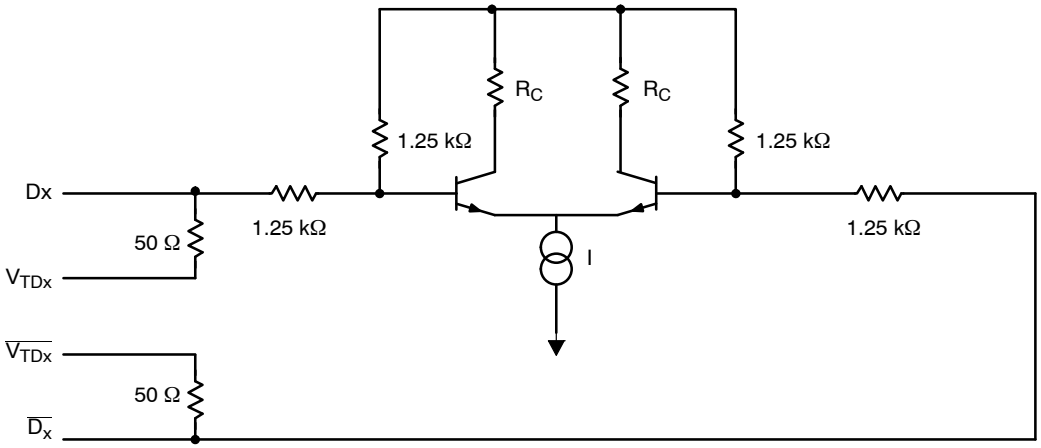

Figure 6. Input Structure

Share Feedback
Your Opinion Matters

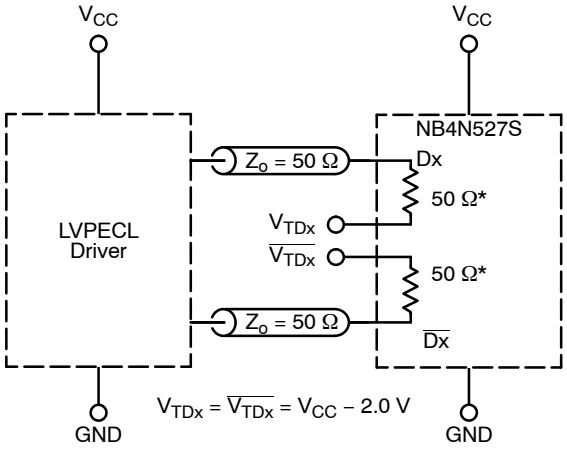

Figure 7. LVPECL Interface

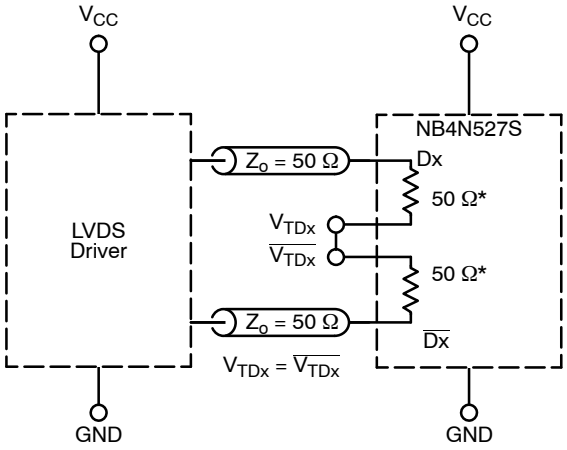

Figure 8. LVDS Interface

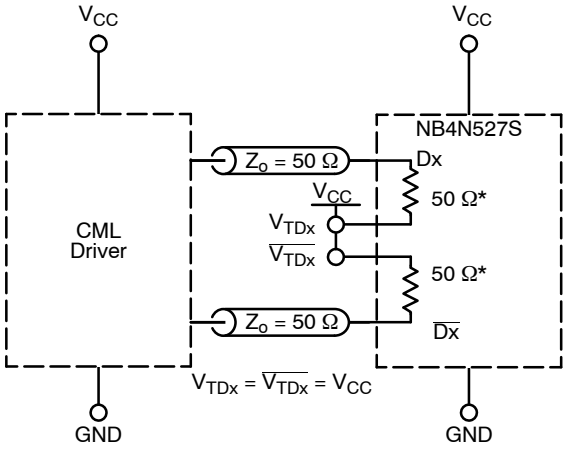

Figure 9. Standard 50 Ω Load CML Interface

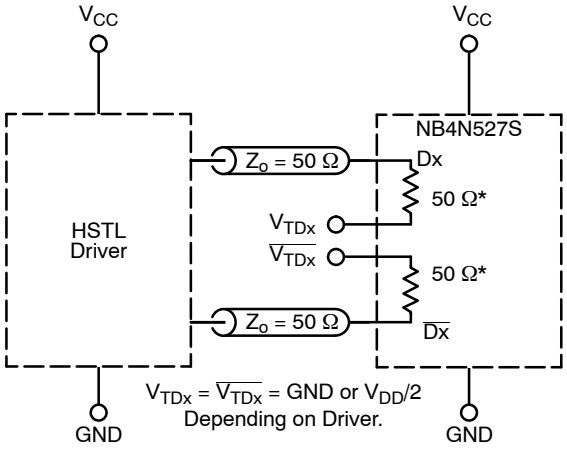

Figure 10. HSTL Interface

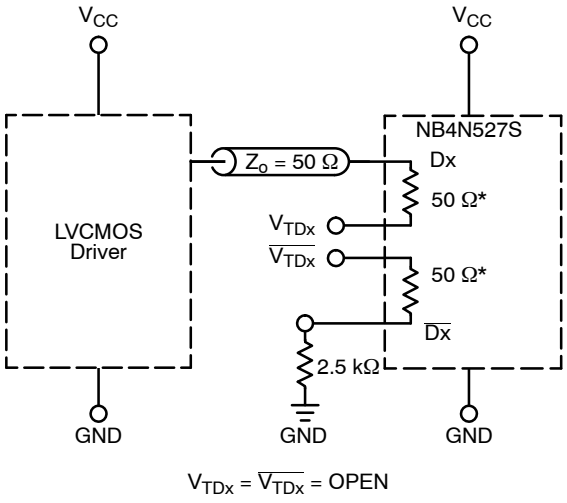

Figure 11. LVCMOS Interface

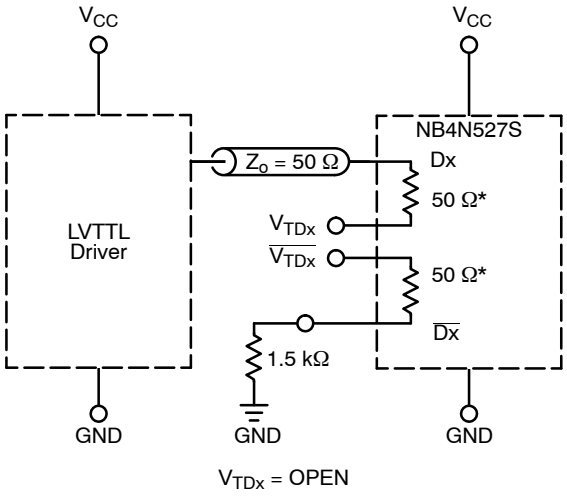

Figure 12. LVTTL Interface

*R_{TIN}, Internal Input Termination Resistor.

Share Feedback
Your Opinion Matters

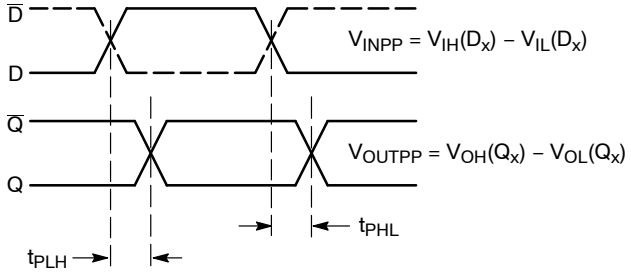

Figure 13. AC Reference Measurement

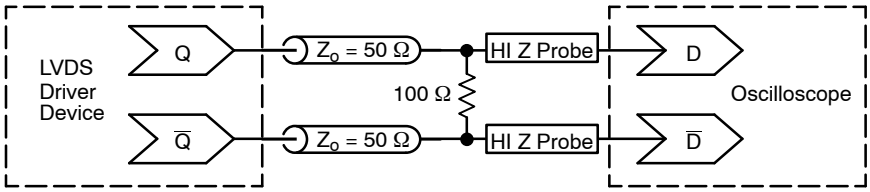

Figure 14. Typical LVDS Termination for Output Driver and Device Evaluation

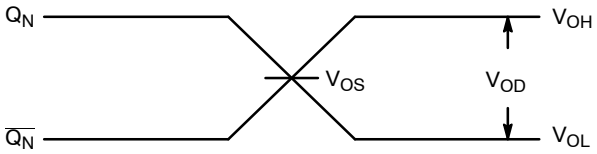

Figure 15. LVDS Output

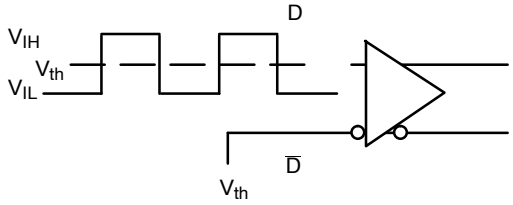

Figure 16. Differential Input Driven Single−Ended

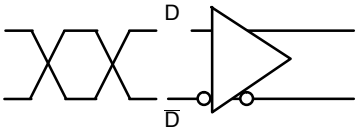

Figure 17. Differential Inputs Driven Differentially

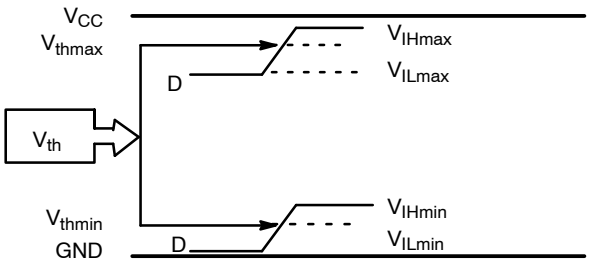

Figure 18. V_{th} Diagram

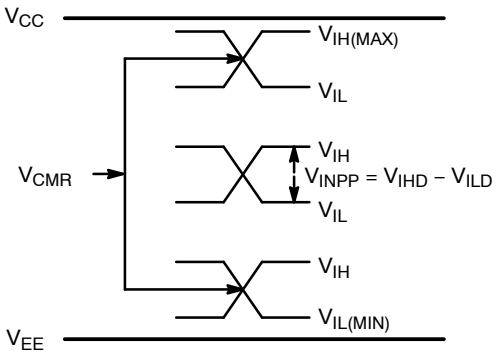

Figure 19. V_{CMR} Diagram

Share Feedback
Your Opinion Matters

ORDERING INFORMATION

Device	Package	Shipping†
NB4N527SMNG	QFN−16 (Pb−Free)	123 Units / Rail
NB4N527SMNR2G	QFN−16 (Pb−Free)	3000 / Tape & Reel

†For information on tape and reel specifications, including part orientation and tape sizes, please refer to our Tape and Reel Packaging Specifications Brochure, BRD8011/D.

AnyLevel is a trademark of Semiconductor Components Industries, LLC dba “**onsemi**” or its affiliates and/or subsidiaries in the United States and/or other countries.

Share Feedback
Your Opinion Matters

QFN16 3x3, 0.5P
CASE 485G
ISSUE G

DATE 08 OCT 2021

SCALE 2:1

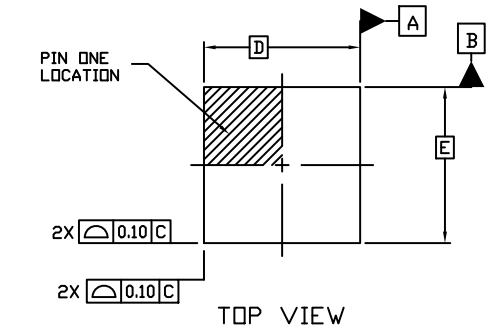

TOP VIEW

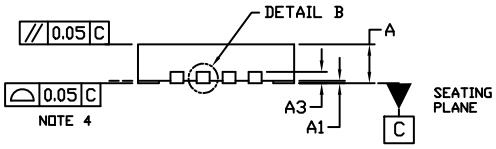

SIDE VIEW

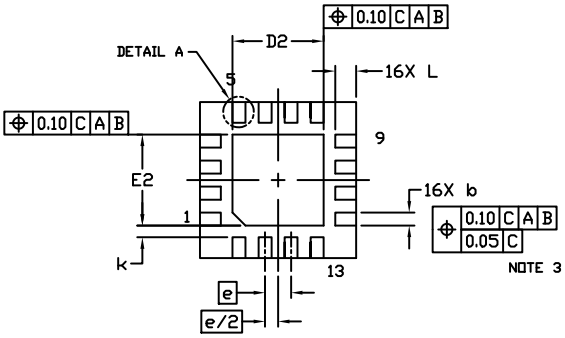

BOTTOM VIEW

NOTES:

1. DIMENSIONING AND TOLERANCING PER ASME Y14.5M, 1994.
2. CONTROLLING DIMENSION: MILLIMETERS
3. DIMENSION b APPLIES TO PLATED TERMINAL AND IS MEASURED BETWEEN 0.15 AND 0.30 MM FROM THE TERMINAL TIP.
4. COPLANARITY APPLIES TO THE EXPOSED PAD AS WELL AS THE TERMINALS.

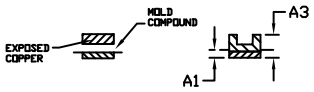

DETAIL B
ALTERNATE CONSTRUCTIONS

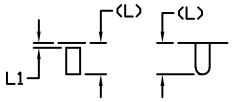

DETAIL A
ALTERNATE TERMINAL CONSTRUCTIONS

DIM	MILLIMETERS		
	MIN.	NOM.	MAX.
A	0.80	0.90	1.00
A1	0.00	0.03	0.05
A3		0.20 REF	
b	0.18	0.24	0.30
D		3.00 BSC	
D2	1.65	1.75	1.85
E		3.00 BSC	
E2	1.65	1.75	1.85
e		0.50 BSC	
k		0.18 TYP	
L	0.30	0.40	0.50
L1	0.00	0.08	0.15

MOUNTING FOOTPRINT

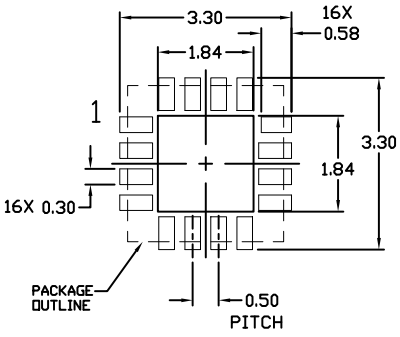

GENERIC MARKING DIAGRAM*



XXXXX = Specific Device Code
A = Assembly Location
L = Wafer Lot
Y = Year
W = Work Week
▪ = Pb−Free Package

(Note: Microdot may be in either location)

*This information is generic. Please refer to device data sheet for actual part marking. Pb−Free indicator, “G” or microdot “▪”, may or may not be present. Some products may not follow the Generic Marking.

DOCUMENT NUMBER:	**98AON04795D**	Electronic versions are uncontrolled except when accessed directly from the Document Repository. Printed versions are uncontrolled except when stamped “CONTROLLED COPY” in red.
DESCRIPTION:	**QFN16 3X3, 0.5P**	**PAGE 1 OF 1**

onsemi and ONSEMI are trademarks of Semiconductor Components Industries, LLC dba **onsemi** or its subsidiaries in the United States and/or other countries. **onsemi** reserves the right to make changes without further notice to any products herein. **onsemi** makes no warranty, representation or guarantee regarding the suitability of its products for any particular purpose, nor does **onsemi** assume any liability arising out of the application or use of any product or circuit, and specifically disclaims any and all liability, including without limitation special, consequential or incidental damages. **onsemi** does not convey any license under its patent rights nor the rights of others.

onsemi, , and other names, marks, and brands are registered and/or common law trademarks of Semiconductor Components Industries, LLC dba "**onsemi**" or its affiliates and/or subsidiaries in the United States and/or other countries. **onsemi** owns the rights to a number of patents, trademarks, copyrights, trade secrets, and other intellectual property. A listing of **onsemi**'s product/patent coverage may be accessed at www.onsemi.com/site/pdf/Patent−Marking.pdf. **onsemi** reserves the right to make changes at any time to any products or information herein, without notice. The information herein is provided "as−is" and **onsemi** makes no warranty, representation or guarantee regarding the accuracy of the information, product features, availability, functionality, or suitability of its products for any particular purpose, nor does **onsemi** assume any liability arising out of the application or use of any product or circuit, and specifically disclaims any and all liability, including without limitation special, consequential or incidental damages. Buyer is responsible for its products and applications using **onsemi** products, including compliance with all laws, regulations and safety requirements or standards, regardless of any support or applications information provided by **onsemi**. "Typical" parameters which may be provided in **onsemi** data sheets and/or specifications can and do vary in different applications and actual performance may vary over time. All operating parameters, including "Typicals" must be validated for each customer application by customer's technical experts. **onsemi** does not convey any license under any of its intellectual property rights nor the rights of others. **onsemi** products are not designed, intended, or authorized for use as a critical component in life support systems or any FDA Class 3 medical devices or medical devices with a same or similar classification in a foreign jurisdiction or any devices intended for implantation in the human body. Should Buyer purchase or use **onsemi** products for any such unintended or unauthorized application, Buyer shall indemnify and hold **onsemi** and its officers, employees, subsidiaries, affiliates, and distributors harmless against all claims, costs, damages, and expenses, and reasonable attorney fees arising out of, directly or indirectly, any claim of personal injury or death associated with such unintended or unauthorized use, even if such claim alleges that **onsemi** was negligent regarding the design or manufacture of the part. **onsemi** is an Equal Opportunity/Affirmative Action Employer. This literature is subject to all applicable copyright laws and is not for resale in any manner.

ADDITIONAL INFORMATION

TECHNICAL PUBLICATIONS:
Technical Library: www.onsemi.com/design/resources/technical−documentation
onsemi Website: www.onsemi.com

ONLINE SUPPORT: www.onsemi.com/support
For additional information, please contact your local Sales Representative at www.onsemi.com/support/sales