Low-Voltage, 1 Ω SPDT Analog Switch

FSA4157, FSA4157A



SIP6 1.45X1.0
CASE 127EB

MARKING DIAGRAMS



XX = Specific Device Code (EG, EU)
&K = 2−Digits Lot Run Traceability Code
&2 = 2−Digit Date Code
&Z = Assembly Plant Code

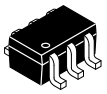

SC−88 (SC−70 6 Lead), 1.25x2
CASE 419AD

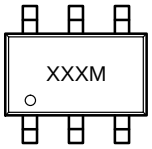

XXX = Specific Device Code (A57, B57)
M = Assembly Operation Month

*Date Code orientation and/or position may vary depending upon manufacturing location.

Description

FSA4157 and FSA4157A are high performance Single Pole/Double Throw (SPDT) analog switches. Both devices feature ultra low R_{ON} of 1.15 Ω maximum at 4.5 V VCC and operates over the wide V_{CC} range of 1.65 V to 5.5 V for FSA4157, and 2.7 V to 5.5 V for FSA4157A. The device is fabricated with sub−micron CMOS technology to achieve fast switching speeds and is designed for break−before−make operation. The select input is TTL level compatible.

The FSA4157A features very low quiescent current even when the control voltage is lower than the V_{CC} supply. This feature services the mobile handset applications very well allowing for the direct interface with baseband processor general purpose I/Os.

Features

- FSA4157A Features Lower I_{CC} when the S Input is Lower than V_{CC}
- Maximum 1.15 Ω On Resistance (R_{ON}) at 4.5 V V_{CC}
- 0.3 Ω Maximum R_{ON} Flatness at 4.5 V V_{CC}
- Space−Saving 6−lead, MicroPak™ and SC70 6 Packages
- Broad V_{CC} Operating Range:
  - FSA4157: 1.65 V to 5.5 V
  - FSA4157A: 2.7 V to 5.5 V
- Fast Turn−On and Turn−Off Time
- Break−Before−Make Enable Circuitry
- Over−Voltage Tolerant TTL−Compatible Control Circuitry
- These Devices are Pb−Free and are RoHS Compliant

ORDERING INFORMATION

See detailed ordering and shipping information on page 2 of this data sheet.

NOTE: Some of the devices on this data sheet have been **DISCONTINUED**. Please refer to the table on page 2.

© Semiconductor Components Industries, LLC, 2003

ORDERING INFORMATION

Part Number	Top Mark	Package	Shipping†
FSA4157P6X	A57	SC−88 (SC−70 6 Lead), 1.25x2 (Pb−Free)	3000 / Tape & Reel
FSA4157AP6X	B57	SC−88 (SC−70 6 Lead), 1.25x2 (Pb−Free)	3000 / Tape & Reel

DISCONTINUED (Note 1)

FSA4157L6X	EG	SIP6 1.45X1.0 (Pb−Free)	5000 / Tape & Reel
FSA4157AL6X	EU	SIP6 1.45X1.0 (Pb−Free)	5000 / Tape & Reel

†For information on tape and reel specifications, including part orientation and tape sizes, please refer to our Tape and Reel Packaging Specifications Brochure, BRD8011/D.

1. **DISCONTINUED:** These devices are not recommended for new design. Please contact your **onsemi** representative for information. The most current information on these devices may be available on www.onsemi.com.

PIN CONFIGURATIONS

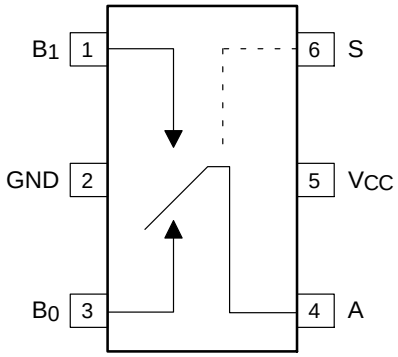

(Top View)

Figure 1. SC70 Pin Assignments

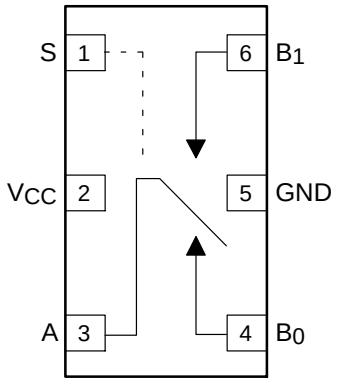

(Top Through View)

Figure 2. MicroPak Pin Assignments

PIN DEFINITIONS

Pin# SC70	Pin# MicroPak	Name	Description
1	6	B1	Data Ports
2	5	GND	Ground
3	4	B0	Data Ports
4	3	A	Data Ports
5	2	V_{CC}	Supply Voltage
6	1	S	Control Input

TRUTH TABLE

Control Input (S)	Function
Low	B0 connected to A
High	B1 connected to A

Share Feedback
Your Opinion Matters

ABSOLUTE MAXIMUM RATINGS

Symbol	Parameter		Min	Max	Unit
V_{CC}	Supply Voltage		−0.5	6.0	V
V_S	DC Switch Voltage (Note 2)		−0.5	V_{CC} + 0.5	V
V_{IN}	DC Input Voltage (Note 2)		−0.5	6.0	V
I_{IK}	DC Input Diode Current		−50		mA
I_{SW}	Switch Current			200	mA
I_{SWPEAK}	Peak Switch Current (Pulse at 1 ms duration, < 10% Duty Cycle)			400	mA
P_D	Power Dissipation at 85°C SC70 MicroPak			 180 180	mW
T_{STG}	Storage Temperature Range		−65	+150	°C
T_J	Maximum Junction Temperature			+150	°C
T_L	Lead Temperature (Soldering, 10 seconds)			+260	°C
ESD	Electrostatic Discharge Capability	Human Body Model, JESD22−A114 (FSA4157A)		7500	V

Stresses exceeding those listed in the Maximum Ratings table may damage the device. If any of these limits are exceeded, device functionality should not be assumed, damage may occur and reliability may be affected.

2. Input and output negative ratings may be exceeded if input and output diode current ratings are observed.

RECOMMENDED OPERATING CONDITIONS

Symbol	Parameter		Min	Max	Unit
V_{CC}	Supply Voltage	FSA4157	1.65	5.50	V
		FSA4157A	2.7	5.5	
V_{CNTRL}	Control Input Voltage (Note 3)		0	V_{CC}	V
V_{SW}	Switch Input Voltage		0	V_{CC}	V
T_A	Operating Temperature		−40	+85	°C
θ_{JA}	Thermal Resistance in Still Air	SC70		350	°C/W
		MicroPak (Estimated)		330	

Functional operation above the stresses listed in the Recommended Operating Ranges is not implied. Extended exposure to stresses beyond the Recommended Operating Ranges limits may affect device reliability.

3. Control input must be held HIGH or LOW and it must not float.

Share Feedback
Your Opinion Matters

DC ELECTRICAL CHARACTERISTICS

(Typical values are at 25°C unless otherwise specified.)

Symbol	Parameter	Conditions	V_{CC}(V)	Ambient Temperature					Unit
				−25°C			−40 to +85°C		
				Min.	Typ.	Max.	Min.	Max.	
V_{IH}	Input Voltage High	FSA4157 Only	1.8 to 2.7				1.0		V
			2.7 to 3.6				2.0		
			4.5 to 5.5				2.4		
V_{IL}	Input Voltage Low	FSA4157 Only	1.8 to 2.7					0.4	V
		FSA4157A Only	2.7 to 3.6					0.4	
			2.7 to 3.6					0.6	
			4.5 to 5.5					0.8	
I_{IN}	Control Input Leakage	V_{IN} = 0 V to V_{CC}	2.7 to 3.6				−1.0	1.0	μA
			4.5 to 5.5				−1.0	1.0	
$I_{NO(OFF)}$, $I_{NC(OFF)}$	Off Leakage Current of Port B0 and B1	A = 1 V, 4.5 V, B_0 or B_1 = 4.5, 1 V	5.5		±2		−20	20	nA
$I_{A(ON)}$	On Leakage Current of Port A	A = 1 V, 4.5v, B_0 or B_1 = 4.5, 1 V, 4.5 V or Floating	5.5		±4		−40	40	nA
R_{ON}	Switch On Resistance	I_{OUT} = 100 mA, B_0 or B_1 = 1.5 V	2.7		2.6	4.0		4.3	Ω
		I_{OUT} = 100 mA, B_0 or B_1 = 3.5 V	4.5		0.95	1.15		1.30	
ΔR_{ON}	On Resistance Matching Between Channels (Note 5)	I_{OUT} = 100 mA, B_0 or B_1 = 1.5 V	4.5		0.06	0.12		0.15	Ω
$R_{FLAT(ON)}$	On Resistance Flatness (Note 5)	I_{OUT} = 100 mA, B_0 or B_I = 0 V, 0.75 V,1.5 V	2.7		1.4				Ω
		I_{OUT} = 100 mA, B_0 or B_I = 0 V, 1 V, 2 V	4.5		0.2	0.3		0.4	
I_{CC}	Quiescent Supply Current	V_{IN} = 0 V or V_{CC}, I_{OUT} = 0 V	3.6		0.1	0.5		1.0	μA
			5.5		0.1	0.5		1.0	
ΔI_{CC}	Increase in I_{CC} per Input	One Input at 2.7 V, others at V_{CC} or GND (FSA4157A Only)	4.3		0.2			10.0	μA

4. Measured by the voltage drop between the A and B pins at the indicated current through the switch. On resistance is determined by the lower of the voltage on the two (A or B ports).
5. $\Delta R_{ON} = R_{ON\ max} - R_{ON\ min}$ measured at identical V_{CC}, temperature, and voltage.
6. Flatness is defined as the difference between the maximum and minimum value of on resistance over the specified range of conditions.

Share Feedback
Your Opinion Matters

AC ELECTRICAL CHARACTERISTICS

(Typical values are at 25°C unless otherwise specified.)

Symbol	Parameter	Conditions	V_{CC}(V)	Ambient Temperature					Unit	Figure
				−25°C			−40 to +85°C			
				Min.	Typ.	Max.	Min.	Max.		
t_{ON}	Turn−On Time	B_0 or B_1 = 1.5 V, R_L = 50 Ω, C_L = 35 pF (FSA4157A Only)	2.7 to 3.6			60		65	ns	Figure 8
		B_0 or B_1 = 1.5V, R_L = 50 Ω, C_L = 35 pF	2.7 to 3.6			50		60		
		B_0 or B_1 = 1.5 V, R_L = 50 Ω, C_L = 35 pF	4.5 to 5.5			35		40		
t_{OFF}	Turn−Off Time	B_0 or B_1 = 1.5 V, R_L = 50 Ω, C_L = 35 pF	2.7 to 3.6			20		30	ns	Figure 8
		B_0 or B_1 = 1.5 V, R_L = 50 Ω, C_L = 35 pF	4.5 to 5.5			15		20		
t_{BBM}	Break−Before−Make Time	FSA4157	2.7 to 3.6						ns	Figure 9
			4.5 to 5.5		20					
		FSA4157A Only	4.5 to 5.5		25					
Q	Charge Injection	C_L = 1.0 nF, V_{GE} = 0 V, R_{GEN} = 0 Ω	2.7 to 3.6		10				pC	Figure 11
			4.5 to 5.5		20					
OIRR	Off Isolation	f = 1 MHz, R_L = 50 Ω	2.7 to 3.6		−70				dB	Figure 10
			4.5 to 5.5		−70					
Xtalk	Crosstalk	f = 1 MHz, R_L = 50 Ω	2.7 to 3.6		−70				dB	Figure 10
			4.5 to 5.5		−70					
BW	−3db Bandwidth	R_L = 50 Ω	2.7 to 3.6			300			MHz	Figure 13
			4.5 to 5.5			300				
THD	Total Harmon Distortion	R_L = 600 Ω, V_{IN} = 0.5, f = 20 Hz to 20 kHz	2.7 to 3.6		0.002				%	Figure 14
			4.5 to 5.5		0.002					

CAPACITANCE

Symbol	Parameter	Conditions	V_{CC} (V)	Ambient Temperature −25°C			Units	Figure
				Min.	Typ.	Max.		
C_{IN}	Control Pin Input Capacitance	f = 1 MHz	0.0		3.5		pF	Figure 12
C_{OFF}	B Port Off Capacitance	f = 1 MHz	4.5		12.0		pF	Figure 12
C_{ON}	On Capacitance	f = 1 MHz	4.5		40.0		pF	Figure 12

Share Feedback
Your Opinion Matters

TYPICAL PERFORMANCE CHARACTERISTICS

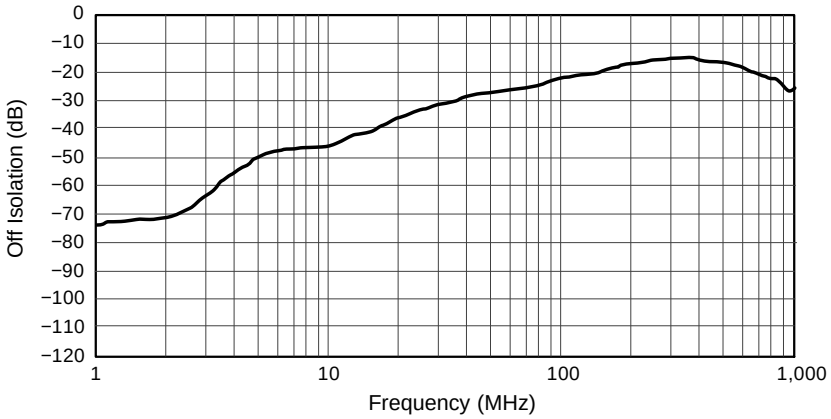

Figure 3. Off Isolation, V_{CC} = 2.7 V to 5.5 V

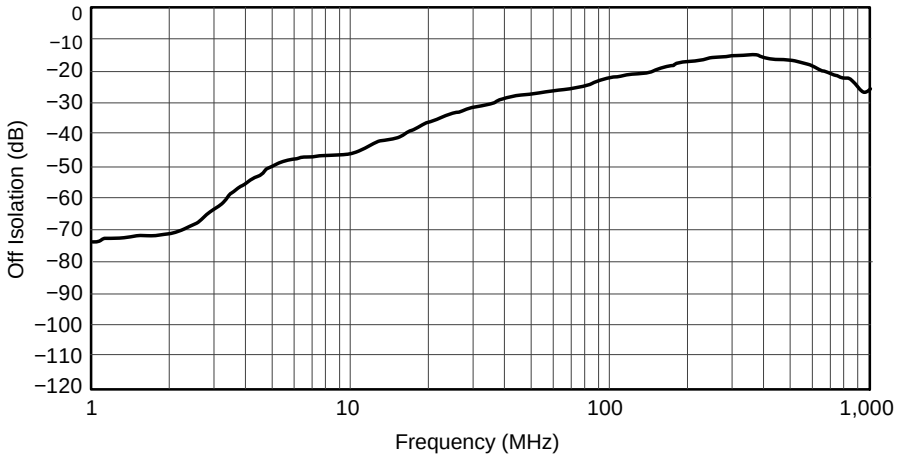

Figure 4. Crosstalk, V_{CC} = 2.7 V to 5.5 V

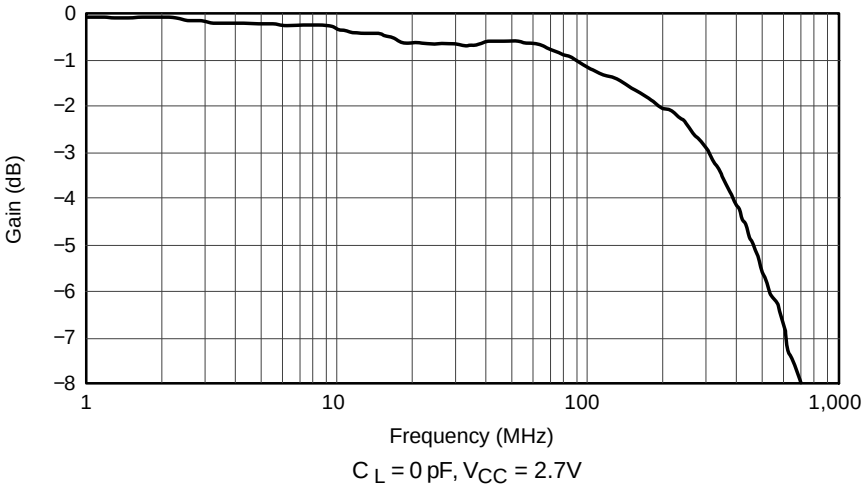

Figure 5. Crosstalk, V_{CC} = 2.7 V to 5.5 V

Share Feedback
Your Opinion Matters

TYPICAL PERFORMANCE CHARACTERISTICS (Continued)

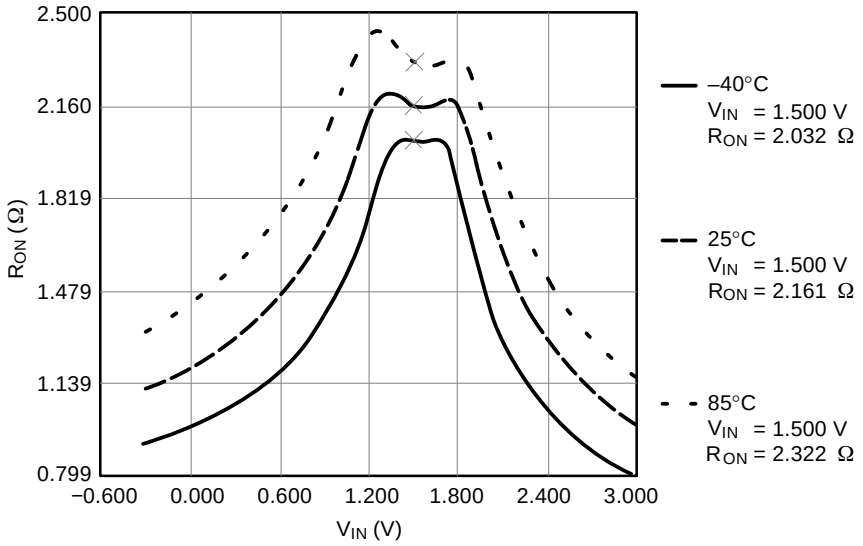

Figure 6. R_{ON} Switch On Resistance, I_{ON} = 100 mA, V_{CC} = 2.7 V

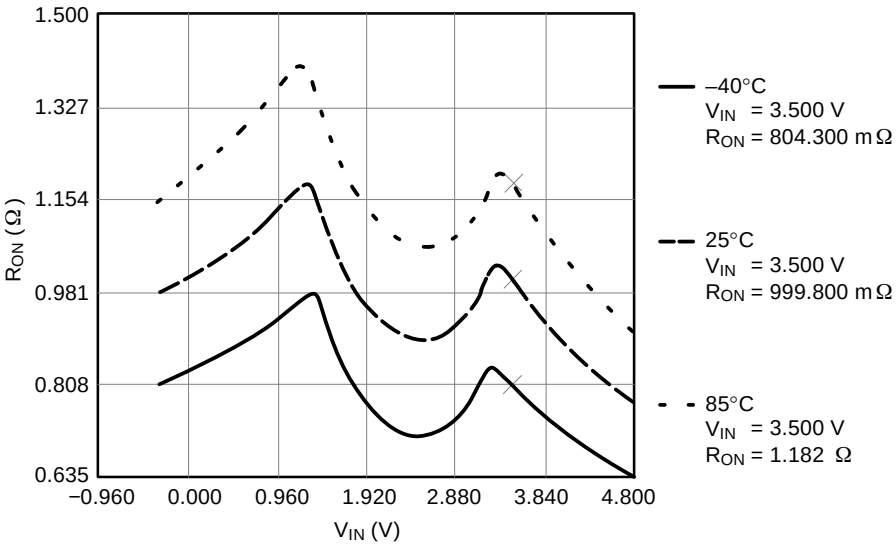

Figure 7. R_{ON} Switch On Resistance, I_{ON} = 100 mA, V_{CC} = 4.5 V

Share Feedback
Your Opinion Matters

AC LOADINGS AND WAVEFORMS

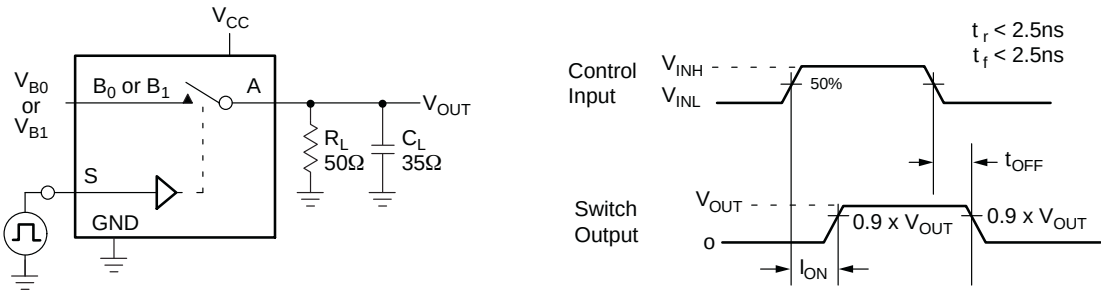

C_L Includes Fixture and Stray Capacitance

Logic Input Waveforms Inverted for Switches that have the Opposite Logic Sense

Figure 8. Turn On / Off Timing

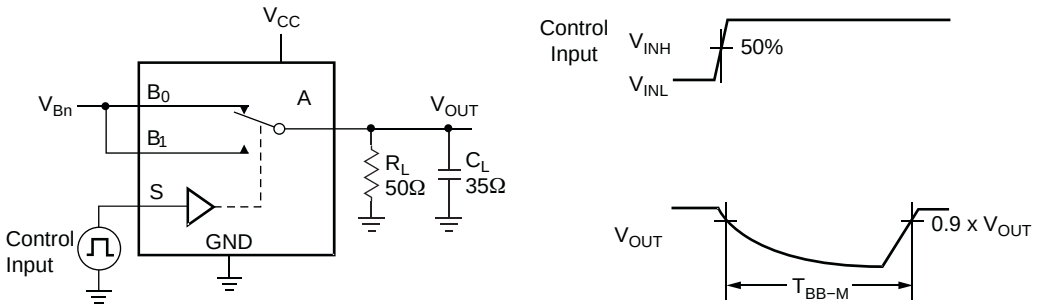

C_L includes fixture and stray capacitance

Figure 9. Break Before Make Timing

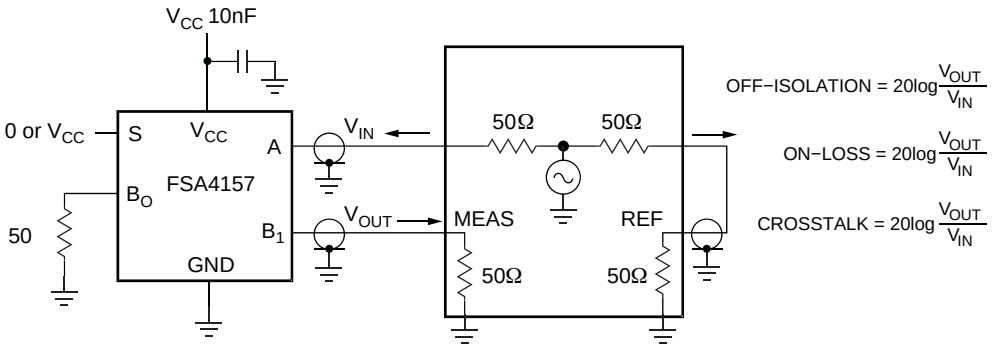

Figure 10. Off Isolation and Crosstalk

Share Feedback
Your Opinion Matters

AC LOADINGS AND WAVEFORMS (Continued)

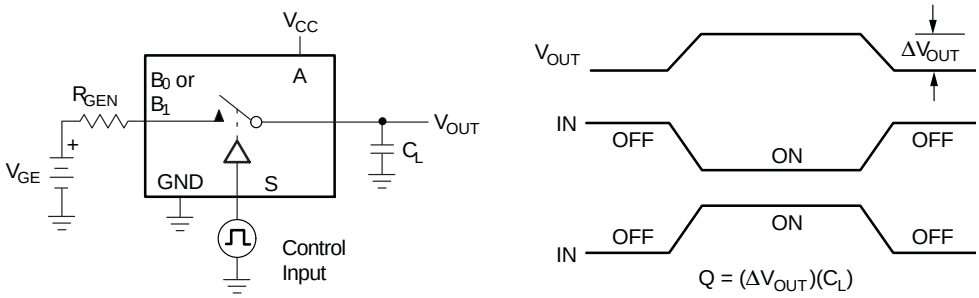

Figure 11. Charge Injection

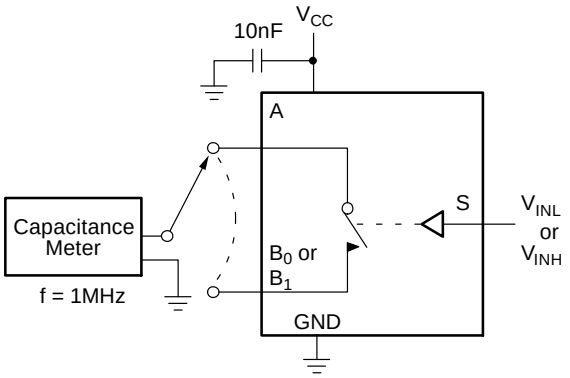

Figure 12. On / Off Capacitance Measurement Setup

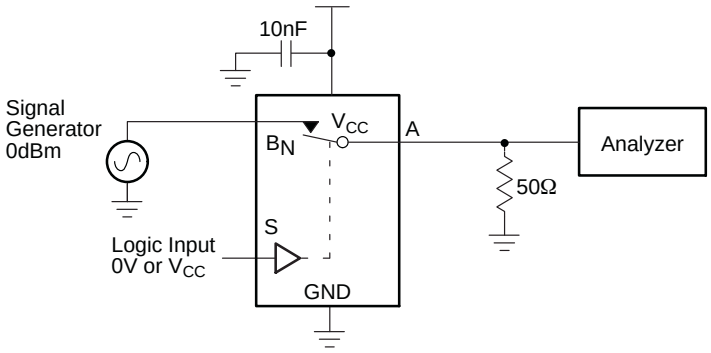

Figure 13. Bandwidth

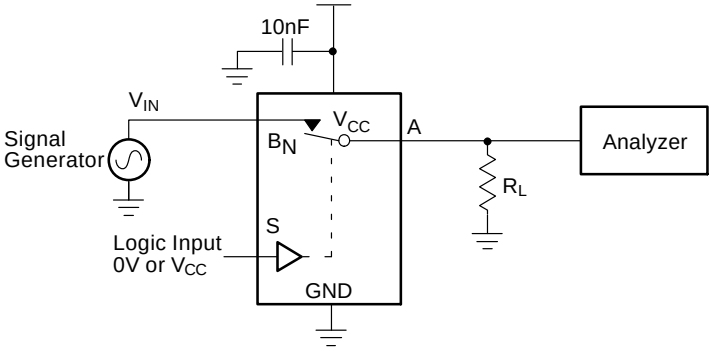

Figure 14. Harmonic Distortion

MicroPak is a trademark of Semiconductor Components Industries, LLC dba “**onsemi**” or its affiliates and/or subsidiaries in the United States and/or other countries.

Share Feedback
Your Opinion Matters

SIP6 1.45X1.0
CASE 127EB
ISSUE O

DATE 31 AUG 2016

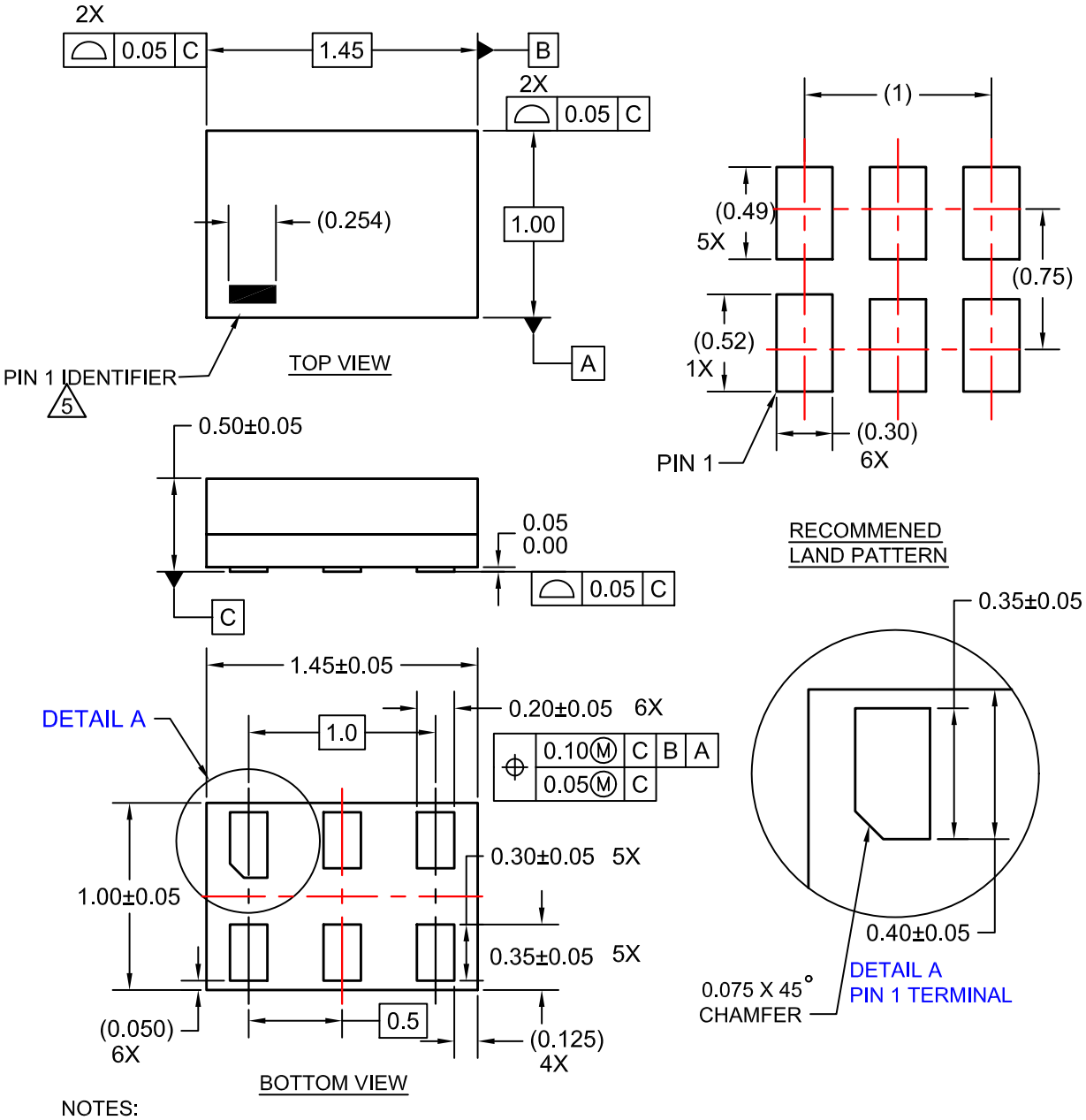

NOTES:

1. CONFORMS TO JEDEC STANDARD MO-252 VARIATION UAAD
2. DIMENSIONS ARE IN MILLIMETERS
3. DRAWING CONFORMS TO ASME Y14.5M-2009
4. PIN ONE IDENTIFIER IS 2X LENGTH OF ANY OTHER LINE IN THE MARK CODE LAYOUT.

DOCUMENT NUMBER:	**98AON13590G**	Electronic versions are uncontrolled except when accessed directly from the Document Repository. Printed versions are uncontrolled except when stamped "CONTROLLED COPY" in red.
DESCRIPTION:	**SIP6 1.45X1.0**	**PAGE 1 OF 1**

onsemi and onsemi are trademarks of Semiconductor Components Industries, LLC dba **onsemi** or its subsidiaries in the United States and/or other countries. **onsemi** reserves the right to make changes without further notice to any products herein. **onsemi** makes no warranty, representation or guarantee regarding the suitability of its products for any particular purpose, nor does **onsemi** assume any liability arising out of the application or use of any product or circuit, and specifically disclaims any and all liability, including without limitation special, consequential or incidental damages. **onsemi** does not convey any license under its patent rights nor the rights of others.

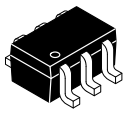

1

SC−88 (SC−70 6 Lead), 1.25x2
CASE 419AD
ISSUE A

DATE 07 JUL 2010

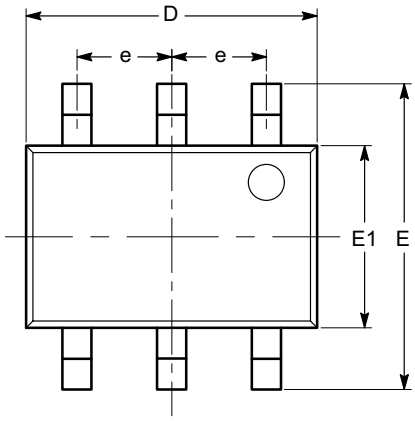

TOP VIEW

SYMBOL	MIN	NOM	MAX
A	0.80		1.10
A1	0.00		0.10
A2	0.80		1.00
b	0.15		0.30
c	0.10		0.18
D	1.80	2.00	2.20
E	1.80	2.10	2.40
E1	1.15	1.25	1.35
e		0.65 BSC	
L	0.26	0.36	0.46
L1		0.42 REF	
L2		0.15 BSC	
θ	0°		8°
θ1	4°		10°

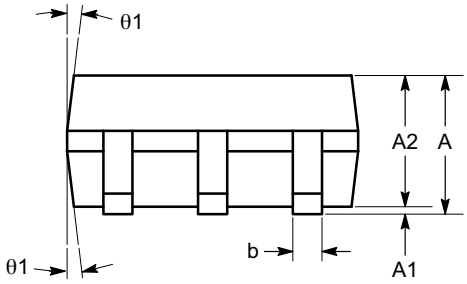

SIDE VIEW

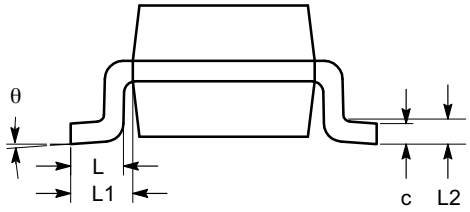

END VIEW

Notes:
(1) All dimensions are in millimeters. Angles in degrees.
(2) Complies with JEDEC MO-203.

DOCUMENT NUMBER:	**98AON34266E**	Electronic versions are uncontrolled except when accessed directly from the Document Repository. Printed versions are uncontrolled except when stamped "CONTROLLED COPY" in red.	
DESCRIPTION:	**SC−88 (SC−70 6 LEAD), 1.25X2**		**PAGE 1 OF 1**

onsemi and onsemi are trademarks of Semiconductor Components Industries, LLC dba **onsemi** or its subsidiaries in the United States and/or other countries. **onsemi** reserves the right to make changes without further notice to any products herein. **onsemi** makes no warranty, representation or guarantee regarding the suitability of its products for any particular purpose, nor does **onsemi** assume any liability arising out of the application or use of any product or circuit, and specifically disclaims any and all liability, including without limitation special, consequential or incidental damages. **onsemi** does not convey any license under its patent rights nor the rights of others.

© Semiconductor Components Industries, LLC, 2008

onsemi, , and other names, marks, and brands are registered and/or common law trademarks of Semiconductor Components Industries, LLC dba "**onsemi**" or its affiliates and/or subsidiaries in the United States and/or other countries. **onsemi** owns the rights to a number of patents, trademarks, copyrights, trade secrets, and other intellectual property. A listing of **onsemi**'s product/patent coverage may be accessed at www.onsemi.com/site/pdf/Patent−Marking.pdf. **onsemi** reserves the right to make changes at any time to any products or information herein, without notice. The information herein is provided "as−is" and **onsemi** makes no warranty, representation or guarantee regarding the accuracy of the information, product features, availability, functionality, or suitability of its products for any particular purpose, nor does **onsemi** assume any liability arising out of the application or use of any product or circuit, and specifically disclaims any and all liability, including without limitation special, consequential or incidental damages. Buyer is responsible for its products and applications using **onsemi** products, including compliance with all laws, regulations and safety requirements or standards, regardless of any support or applications information provided by **onsemi**. "Typical" parameters which may be provided in **onsemi** data sheets and/or specifications can and do vary in different applications and actual performance may vary over time. All operating parameters, including "Typicals" must be validated for each customer application by customer's technical experts. **onsemi** does not convey any license under any of its intellectual property rights nor the rights of others. **onsemi** products are not designed, intended, or authorized for use as a critical component in life support systems or any FDA Class 3 medical devices or medical devices with a same or similar classification in a foreign jurisdiction or any devices intended for implantation in the human body. Should Buyer purchase or use **onsemi** products for any such unintended or unauthorized application, Buyer shall indemnify and hold **onsemi** and its officers, employees, subsidiaries, affiliates, and distributors harmless against all claims, costs, damages, and expenses, and reasonable attorney fees arising out of, directly or indirectly, any claim of personal injury or death associated with such unintended or unauthorized use, even if such claim alleges that **onsemi** was negligent regarding the design or manufacture of the part. **onsemi** is an Equal Opportunity/Affirmative Action Employer. This literature is subject to all applicable copyright laws and is not for resale in any manner.

ADDITIONAL INFORMATION

TECHNICAL PUBLICATIONS:
Technical Library: www.onsemi.com/design/resources/technical−documentation
onsemi Website: www.onsemi.com

ONLINE SUPPORT: www.onsemi.com/support
For additional information, please contact your local Sales Representative at www.onsemi.com/support/sales