Integrated Critical-Mode PFC and Quasi-Resonant Current-Mode PWM Lightning Controller

FL7921R

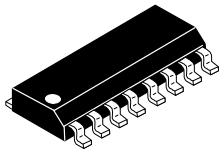

SOIC−16, 150 mils
CASE 751BG−01

Description

The highly integrated FL7921R combines a Power Factor Correction (PFC) controller and a Quasi−Resonant PWM controller. Integration provides cost effect design and allows for fewer external components.

For PFC, FL7921R uses a controlled on−time technique to provide a regulated DC output voltage and to perform natural power factor correction. An innovative THD optimizer reduces input current distortion at zero−crossing duration to improve THD performance. The PFC function is always on regardless of the PWM stage load condition to ensure that high PF can be achieved at light load condition.

For PWM, FL7921R provides several functions to enhance power system performance: valley detection, green−mode operation, high / low line over−power compensation. Protection functions include secondary−side open−loop and over−current with auto−recovery protection, external recovery triggering, adjustable over−temperature protection through the RT pin and external NTC resistor, internal over−temperature shutdown, VDD pin OVP, DET pin over−voltage for output OVP, and brown−in / out for AC input voltage UVP. All protections are auto recovery mode except PWM current sense pin open protection.

The FL7921R controller is available in a 16−pin small outline−package (SOP).

Features

- Integrated PFC and Flyback Controller
- Critical−Mode PFC Controller
- Zero−Current Detection for PFC Stage
- Quasi−Resonant Operation for PWM Stage
- Internal Minimum t_{OFF} 8 μs for QR PWM Stage
- Internal 10 ms Soft−Start for PWM
- Brownout Protection
- High / Low Line Over−Power Compensation
- Auto Recovery Over−Current Protection
- Auto Recovery Open−Loop Protection
- Auto Recovery Over−Temperature Protection
- Adjustable Over−Temperature with External NTC through the RT Pin
- Auto Recovery VDD Pin and Output Voltage OVP
- This is a Pb−Free Device

Applications

- Medium to High Power LED Lighting Driver Application

MARKING DIAGRAM

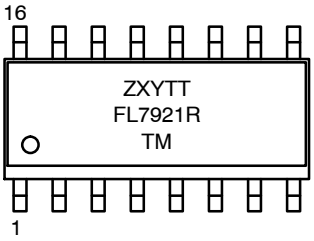

FL7921RMA	= Specific Device Code
Z	= Plant Code
X	= 1−Digit Year Code
Y	= 1−Digit Week Code
TT	= Die−Run Code
T	= Package Type (M = SOP)
M	= Manufacture Flow Code

ORDERING INFORMATION

See detailed ordering and shipping information on page 19 of this data sheet.

© Semiconductor Components Industries, LLC, 2015

APPLICATION DIAGRAM

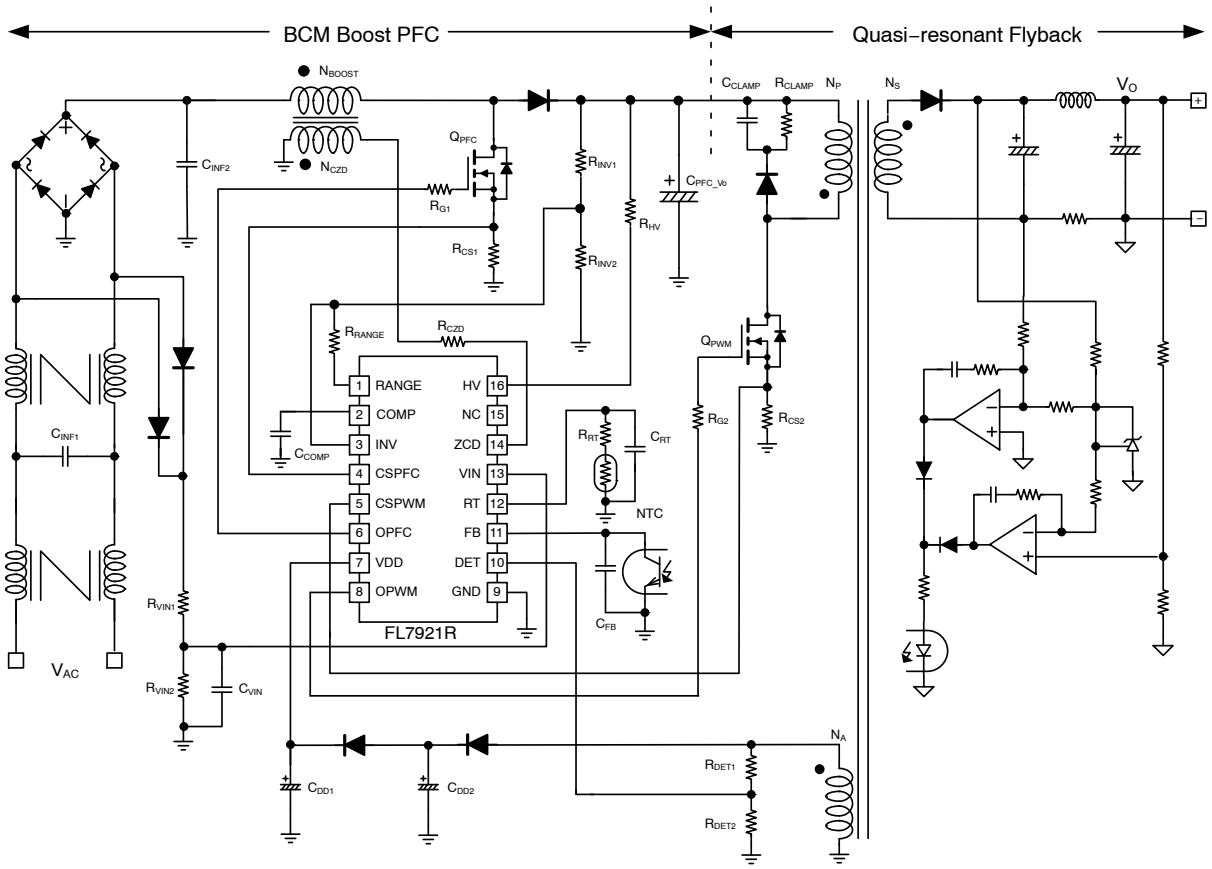

Figure 1. Typical Application

INTERNAL BLOCK DIAGRAM

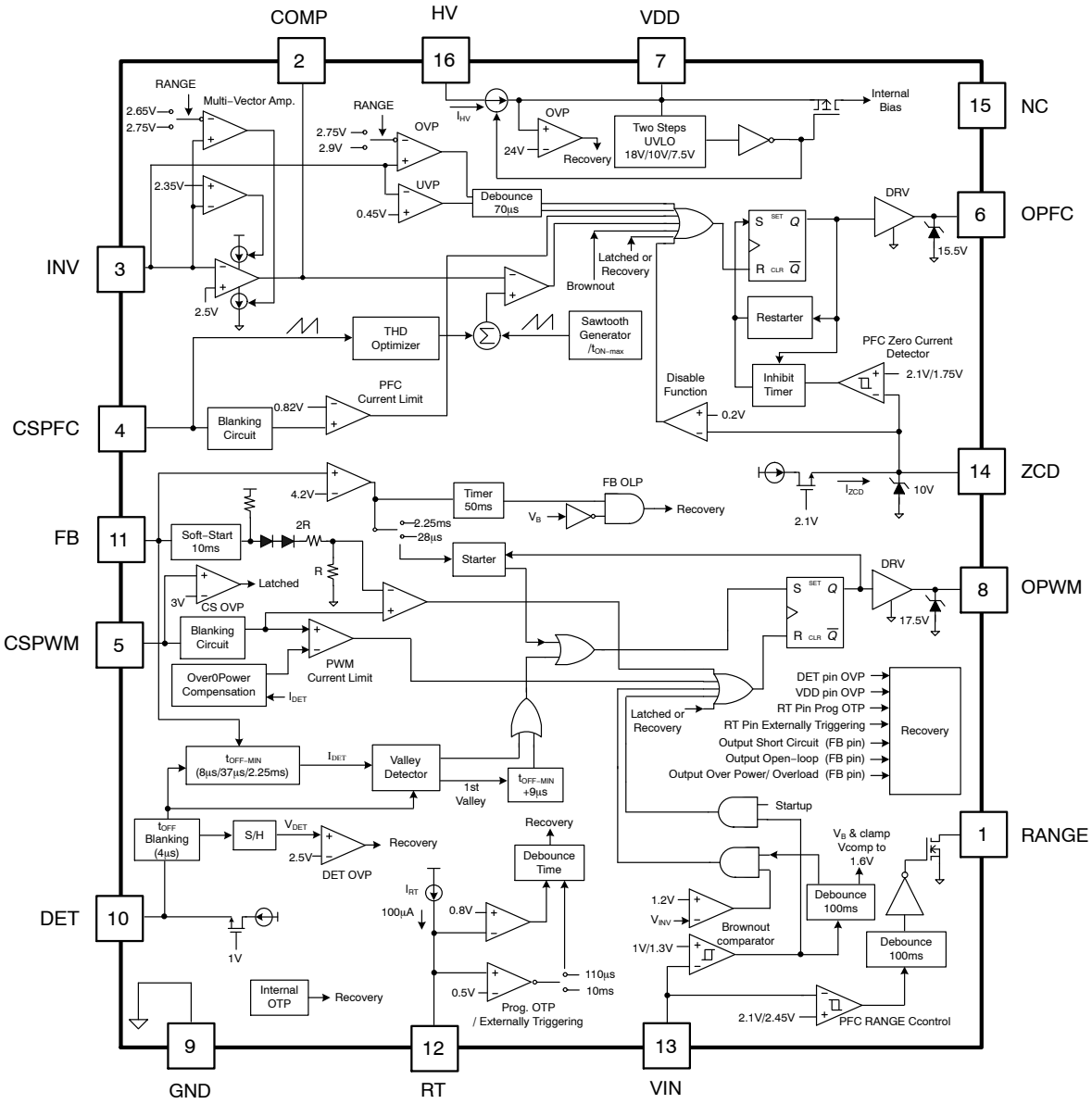

Figure 2. Functional Block Diagram

PIN CONFIGURATION

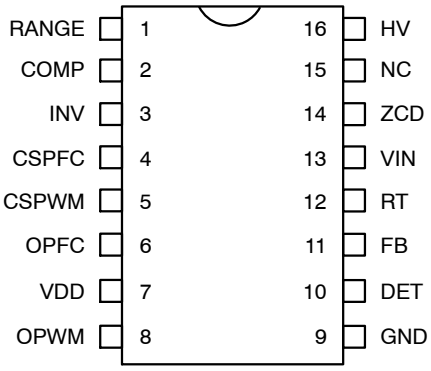

Figure 3. Pin Configuration

PIN DEFINITIONS

Pin #	Name	Description
1	RANGE	RANGE pin's impedance changes according to the VIN pin voltage level. When the input voltage detected by the VIN pin is lower than a threshold voltage, it sets to high impedance; whereas it sets to low impedance if input voltage is at a high level.
2	COMP	Output pin of the error amplifier. It's a Trans−conductance−type error amplifier for PFC output voltage feedback. Proprietary multi−vector current is built−in to this amplifier. Therefore, the compensation for PFC voltage feedback loop allows a simple compensation circuit between this pin and GND.
3	INV	Inverting input of the error amplifier. This pin is used to receive PFC voltage level by a voltage divider and provides PFC output over− and under−voltage protections.
4	CSPFC	Input to the PFC over−current protection comparator that provides cycle−by−cycle current limiting protection. When the sensed voltage across the PFC current−sensing resistor reaches the internal threshold (0.82 V typical), the PFC switch is turned off to activate cycle−by−cycle current limiting.
5	CSPWM	Input to the comparator of the PWM over−current protection and performs PWM current−mode control with FB pin voltage. A resistor is used to sense the switching current of the PWM switch and the sensing voltage is applied to the CSPWM pin for the cycle−by−cycle current limit, current− mode control, and high / low line over−power compensation according to the DET pin source current during PWM t_{ON} time.
6	OPFC	Totem−pole driver output to drive the external power MOSFET. The clamped gate output voltage is 15.5 V.
7	VDD	Power supply. The threshold voltages for startup and turn−off are 18 V and 7.5 V, respectively. The startup current is less than 30 μA and the operating current is lower than 10 mA.
8	OPWM	Totem−pole output generates the PWM signal to drive the external power MOSFET. The clamped gate output voltage is 17.5 V.
9	GND	The power ground and signal ground.
10	DET	This pin is connected to an auxiliary winding of the PWM transformer through a resistor divider for the following purposes: • Producing an offset voltage to compensate the threshold voltage of PWM current limit for providing over−power compensation. The offset is generated in accordance with the input voltage when the PWM switch is on. • Detecting the valley voltage signal of drain voltage of the PWM switch to achieve the valley voltage switching and minimize the switching loss on the PWM switch. • Providing output over−voltage protection. A voltage comparator is built−in to the DET pin. The DET pin detects the flat voltage through a voltage divider paralleled with auxiliary winding. This flat voltage is reflected to the secondary winding during PWM inductor discharge time. If output OVP and this flat voltage is higher than 2.5 V, the controller enters auto recovery mode.
11	FB	Feedback voltage pin. This pin is used to receive the output voltage / current level signal to determine PWM gate duty for regulating output voltage / current. The FB pin voltage can also activate open−loop, overload, and output−short circuit protection if the FB pin voltage is higher than a threshold of around 4.2 V for more than 50 ms. The input impedance of this pin is a 5 kΩ equivalent resistance. A one−third attenuator is connected between the FB pin and the input of the CSPWM/FB comparator.

PIN DEFINITIONS (continued)

Pin #	Name	Description
12	RT	Adjustable over−temperature protection. A constant current is flowed out of the RT pin. When the RT pin voltage is lower than 0.8 V (typical), the controller stops all PFC and PWM switching operation and enters auto recovery protection mode.
13	VIN	Line−voltage detection for brown−in / out protections. This pin can receive the AC input voltage level through a voltage divider. The voltage level of the VIN pin is not only used to control RANGE pin's status; (ZCD) can also perform brown−in / out protection for AC input voltage UVP.
14	ZCD	Zero−current detection for the PFC stage. This pin is connected to an auxiliary winding coupled to PFC inductor winding to detect the ZCD voltage signal once the PFC inductor current discharges to zero. When the ZCD voltage signal is detected, the controller starts a new PFC switching cycle. When the ZCD pin voltage is pulled to under 0.2 V (typical), it disables the PFC stage and the controller stops PFC switching. This can be achieved with an external circuit if disabling the PFC stage is desired.
15	NC	No connection
16	HV	High−voltage startup. HV pin is connected to the AC line voltage through a resistor 100 kΩ (typical) for providing a high charging current to V_{DD} capacitor.

ABSOLUTE MAXIMUM RATINGS

Symbol	Parameter	Min	Max	Unit
V_{DD}	DC Supply Voltage	−	25	V
V_{HV}	HV Pin Voltage	−	500	V
V_H	OPFC, OPWM Pin Voltage	−0.3	25.0	V
V_L	Others (INV, COMP, CSPFC, DET, FB, CSPWM, RT)	−0.3	7.0	V
V_{ZCD}	Input Voltage to ZCD Pin	−0.3	12.0	V
P_D	Power Dissipation	−	800	mW
θ_{JA}	Thermal Resistance (Junction−to−Air)	−	104	°C/W
θ_{JC}	Thermal Resistance (Junction−to−Case)	−	41	°C/W
T_J	Operating Junction Temperature	−40	+150	°C
T_{STG}	Storage Temperature Range	−55	+150	°C
T_L	Lead Temperature (Soldering, 10 Seconds)	−	+260	°C
ESD	Human Body Model, JESD22−A114 (All Pins Except HV Pin) (Note 3)	−	5	kV
	Charged Device Model, JESD22−C101 (All Pins Except HV Pin) (Note 3)	−	2	

Stresses exceeding those listed in the Maximum Ratings table may damage the device. If any of these limits are exceeded, device functionality should not be assumed, damage may occur and reliability may be affected.

1. Stresses beyond those listed under Absolute Maximum Ratings may cause permanent damage to the device.
2. All voltage values, except differential voltages, are given with respect to the GND pin.
3. All pins including HV pin: CDM = 0.5 kV, HBM = 1 kV.

ELECTRICAL CHARACTERISTICS (V_{DD} = 15 V and T_A = −40~105°C, unless otherwise noted)

Symbol	Parameter	Conditions	Min	Typ	Max	Unit
V_{DD} Section						
V_{OP}	Continuously Operating Voltage		–	–	25	V
V_{DD-ON}	Turn−On Threshold Voltage		16.5	18.0	19.5	V
$V_{DD-PWM-OFF}$	PWM−Off Threshold Voltage		9	10	11	V
V_{DD-OFF}	Turn−Off Threshold Voltage	T_A = 25°C	6.5	7.5	8.5	V
I_{DD-ST}	Startup Current	V_{DD} = V_{DD-ON} − 0.16 V, Gate Open	–	20	30	μA
I_{DD-OP}	Operating Current	V_{DD} = 15 V; OPFC, OPWM = 100 kHz; C_{L-PFC}, C_{L-PWM} = 2 nF	–	–	10	mA
$I_{DD-GREEN}$	Green−Mode Operating Supply Current (Average)	V_{DD} = 15 V, OPWM = 450 Hz, C_{L-PWM} = 2 nF	–	5.5	–	mA
$I_{DD-PWM-OFF}$	Operating Current at PWM−Off Phase	V_{DD} = $V_{DD-PWM-OFF}$ − 0.5 V	70	120	170	μA
V_{DD-OVP}	V_{DD} Over−Voltage Protection (Auto Recovery)		23	24	25	V
$t_{VDD-OVP}$	V_{DD} OVP De−bounce Time		100	150	200	μs
$I_{DD-LATCH}$	CSPWM Pin Open Protection Latch−Up Holding Current	V_{DD} = 7.5 V	–	120	–	μA
HV Startup Current Source Section						
V_{HV-MIN}	Minimum Startup Voltage on HV Pin		–	–	50	V
I_{HV}	Supply Current Drawn from HV Pin	V_{AC} = 90 V (V_{DC} = 120 V), V_{DD} = 0 V	1.3	–	–	mA
		HV = 500 V, V_{DD} = V_{DD-OFF} +1 V	–	1	–	μA
VIN and RANGE Section						
$V_{VIN-UVP}$	Threshold Voltage for AC Input Under−Voltage Protection		0.95	1.00	1.05	V
$V_{VIN-RE-UVP}$	Under−Voltage Protection Reset Voltage (for Startup)		$V_{VIN-UVP}$ +0.25 V	$V_{VIN-UVP}$ +0.30 V	$V_{VIN-UVP}$ +0.35 V	V
$t_{VIN-UVP}$	Under−Voltage Protection Debounce Time (No Need at Startup and Hiccup Mode)		70	100	130	ms
$V_{VIN-RANGE-H}$	High V_{VIN} Threshold for RANGE Comparator		2.40	2.45	2.50	V
$V_{VIN-RANGE-L}$	Low V_{VIN} Threshold for RANGE Comparator		2.05	2.10	2.15	V
t_{RANGE}	Range Enable / Disable Debounce Time		70	100	130	ms
$V_{RANGE-OL}$	Output Low Voltage of RANGE Pin	I_O = 1 mA	–	–	0.5	V
$I_{RANGE-OH}$	Output High Leakage Current of RANGE Pin	RANGE = 5 V	–	–	200	nA
$t_{ON-MAX-PFC}$	PFC Maximum On−Time		22	25	28	μs
PFC STAGE						
Voltage Error Amplifier Section						
Gm	Transconductance (Note 4)		100	125	150	μmho
V_{REF}	Feedback Comparator Reference Voltage		2.465	2.500	2.535	V
V_{INV-H}	Clamp High Feedback Voltage	RANGE = Open	2.70	2.75	2.80	V
		RANGE = Ground	2.60	2.65	2.70	

ELECTRICAL CHARACTERISTICS (V_{DD} = 15 V and T_A = −40~105°C, unless otherwise noted) (continued)

Symbol	Parameter	Conditions	Min	Typ	Max	Unit
Voltage Error Amplifier Section						
V_{RATIO}	Clamp High Output Voltage Ratio (Note 4)	V_{INVH} / V_{REF}, RANGE = Open	1.06	–	1.14	V/V
		V_{INVH} / V_{REF}, RANGE = Ground	1.04	–	1.08	
V_{INV-L}	Clamp Low Feedback Voltage		2.25	2.35	2.45	V
$V_{INV-OVP}$	Over−Voltage Protection for INV Input	RANGE = Open	–	2.90	2.95	V
		RANGE = Ground	–	2.75	2.80	
$t_{INV-OVP}$	Over−Voltage Protection Debounce Time		50	70	90	μs
$V_{INV-UVP}$	Under−Voltage Protection for INV Input		0.35	0.45	0.55	V
$t_{INV-UVP}$	Under−Voltage Protection Debounce Time		50	70	90	μs
V_{INV-BO}	PWM and PFC Off Threshold for Brownout Protection		1.15	1.20	1.25	V
$V_{COMP-BO}$	Limited Voltage on COMP Pin for Brownout Protection		1.55	1.60	1.65	V
V_{COMP}	Comparator Output High Voltage	T_A = 25°C	4.8		6.0	V
V_{OZ}	Zero Duty Cycle Voltage on COMP Pin		1.10	1.25	1.40	V
I_{COMP}	Comparator Output Source Current	V_{INV} = 2.3 V, V_{COMP} = 1.5 V	15	30	45	μA
		V_{INV} = 1.5 V, T_A = 25°C	0.50	0.75	1.00	mA
	Comparator Output Sink Current	RANGE = Open, V_{INV} = 2.75 V, V_{COMP} = 5 V, T_A = 25°C	20	30	40	μA
		RANGE = Ground, V_{INV} = 2.65 V, V_{COMP} = 5 V	20	30	40	
PFC Current Sense Section						
V_{CSPFC}	Threshold Voltage for Peak Current Cycle−by−Cycle Limit	V_{COMP} = 5 V	–	0.82	–	V
t_{PD}	Propagation Delay		–	110	200	ns
t_{BNK}	Leading−Edge Blanking Time		110	180	250	ns
A_V	CSPFC Compensation Ratio for THD		0.90	0.95	1.00	V/V
PFC Output Section						
V_Z	PFC Gate Output Clamping Voltage	V_{DD} = 25 V	14.0	15.5	17.0	V
V_{OL}	PFC Gate Output Voltage Low	V_{DD} = 15 V, I_O = 100 mA	–	–	1.5	V
V_{OH}	PFC Gate Output Voltage High	V_{DD} = 15 V, I_O = 100 mA	8	–	–	V
t_R	PFC Gate Output Rising Time	V_{DD} = 12 V, C_L = 3 nF, 20~80%	30	65	100	ns
t_F	PFC Gate Output Falling Time	V_{DD} = 12 V, C_L = 3 nF, 80~20%	30	50	70	ns
PFC Zero−Current Detection Section						
V_{ZCD}	Input Threshold Voltage Rising Edge	V_{ZCD} Increasing	1.9	2.1	2.3	V
$V_{ZCD-HYST}$	Threshold Voltage Hysteresis	V_{ZCD} Decreasing	0.25	0.35	0.45	V
$V_{ZCD-HIGH}$	Upper Clamp Voltage	I_{ZCD} = 3 mA	8	10	–	V
$V_{ZCD-LOW}$	Lower Clamp Voltage		0.40	0.65	0.90	V
$V_{ZCD-SSC}$	Starting Source Current Threshold Voltage		1.3	1.4	1.5	V

ELECTRICAL CHARACTERISTICS (V_{DD} = 15 V and T_A = −40~105°C, unless otherwise noted) (continued)

Symbol	Parameter	Conditions	Min	Typ	Max	Unit
PFC Zero−Current Detection Section						
t_{DELAY}	Maximum Delay from ZCD to Output Turn−On	V_{COMP} = 5 V, f_S = 60 kHz	50	–	200	ns
$t_{RESTART-PFC}$	Restart Time		300	500	700	μs
t_{INHIB}	Inhibit Time (Maximum Switching Frequency Limit)	V_{COMP} = 5 V	1.5	2.5	3.5	μs
$V_{ZCD-DIS}$	PFC Enable / Disable Function Threshold Voltage		0.12	0.19	0.26	V
$t_{ZCD-DIS}$	PFC Enable / Disable Function Debounce Time	V_{ZCD} = 100 mV	100	150	200	μs
PWM STAGE						
Feedback Input Section						
A_V	Input−Voltage to Current−Sense Attenuation (Note 4)	$A_V = \Delta V_{CSPWM} / \Delta V_{FB}$, $0 < V_{CSPWM} < 0.9$	1/2.75	1/3.00	1/3.25	V/V
Z_{FB}	Input Impedance	FB > V_G	3	5	7	kΩ
I_{OZ}	Bias Current (Note 4)	FB = V_{OZ}	–	1.2	2.0	mA
V_{OZ}	Zero Duty−Cycle Input Voltage		0.6	0.85	1.1	V
V_{FB-OLP}	Open−Loop Protection Threshold Voltage		3.9	4.2	4.5	V
t_{FB-OLP}	Debounce Time for Open−Loop Protection		40	52.5	65	ms
t_{FB-SS}	Internal Soft−Start Time (Note 4)	V_{FB} = 0 V~3.6 V	8	10	12	ms
DET Pin OVP and Valley Detection Section						
$V_{DET-OVP}$	Comparator Reference Voltage		2.45	2.50	2.55	V
Av	Open−Loop Gain (Note 4)		–	60	–	dB
BW	Gain Bandwidth (Note 4)		–	1	–	MHz
$t_{DET-OVP}$	Output OVP (Auto Recovery) Debounce Time		100	150	200	μs
$I_{DET-SOURCE}$	Maximum Source Current	V_{DET} = 0 V	–	–	1	mA
$V_{DET-LOW}$	Lower Clamp Voltage	I_{DET} = 1 mA	−0.5	−0.3	−0.1	V
$t_{VALLEY-DELAY}$	Delay from Valley Signal Detected to Output Turn−on (Note 4)		150	200	250	ns
$t_{OFF-BNK}$	Leading−Edge Blanking Time for DET−OVP (2.5 V) and Valley Signal when PWM MOSFET Turns Off (Note 4)		3	4	5	μs
$t_{TIME-OUT}$	Time−Out After $t_{OFF-MIN}$		8	9	10	μs
PWM Oscillator Section						
$t_{ON-MAX-PWM}$	Maximum On Time		37	46	54	μs
$t_{OFF-MIN}$	Minimum Off−Time	$V_{FB} \geq V_N$, T_A = 25°C	7	8	9	μs
		$V_{FB} = V_G$	32	37	42	
V_N	Beginning of Green−On Mode at FB Voltage Level	T_A = 25°C	1.95	2.10	2.25	V
V_G	Beginning of Green−Off Mode at FB Voltage Level	T_A = 25°C	1.00	1.15	1.30	V
ΔV_G	Hysteresis for Beginning of Green−Off Mode at FB Voltage Level		–	0.1	–	V
$t_{STARTER-PWM}$	Start Timer (Time−Out Timer)	$V_{FB} < V_G$, T_A = 25°C	1.85	2.25	2.65	ms
		$V_{FB} > V_{FB-OLP}$, T_A = 25°C	26	32	38	μs
PWM Output Section						
V_{CLAMP}	PWM Gate Output Clamping Voltage	V_{DD} = 25 V	16.0	17.5	19.0	V
V_{OL}	PWM Gate Output Voltage Low	V_{DD} = 15 V, I_O = 100 mA	–	–	1.5	V
V_{OH}	PWM Gate Output Voltage High	V_{DD} = 15 V, I_O = 100 mA	8	–	–	V

ELECTRICAL CHARACTERISTICS (V_{DD} = 15 V and T_A = −40~105°C, unless otherwise noted) (continued)

Symbol	Parameter	Conditions	Min	Typ	Max	Unit
PWM Output Section						
t_R	PWM Gate Output Rising Time	C_L = 3 nF, V_{DD} = 12 V, 20~80%	–	80	110	ns
t_F	PWM Gate Output Falling Time	C_L = 3 nF, V_{DD} = 12 V, 20~80%	–	40	70	ns
Current Sense Section						
t_{PD}	Delay to Output		–	150	200	ns
V_{LIMIT}	Limit Voltage on CSPWM Pin for Over−Power Compensation	I_{DET} < 75 μA, T_A = 25°C	0.85	0.875	0.90	V
		I_{DET} = 185 μA, T_A = 25°C	0.72	0.75	0.78	
		I_{DET} = 350 μA, T_A = 25°C	0.55	0.59	0.63	
V_{SLOPE}	Slope Compensation (Note 4)	t_{ON} = 45 μs, RANGE = Open	0.25	0.30	0.35	V
		t_{ON} = 0 μs	0.05	0.10	0.15	
t_{ON-BNK}	Leading−Edge Blanking Time		–	300		ns
$V_{CS-FLOATING}$	CSPWM Pin Floating V_{CSPWM} Clamped High Voltage	CSPWM Pin Floating	4.5	–	5.0	V
V_{CS-OV}	CSPWM Pin Open Protection (Note 4)		–	3	–	V
t_{CS-H}	Delay with CSPWM Pin Floating	CSPWM Pin Floating	100	150	200	μs
RT Pin Over−Temperature Protection Section						
T_{OTP}	Internal Threshold Temperature for OTP (Note 4)		125	140	155	°C
$T_{OTP-HYST}$	Hysteresis Temperature for Internal OTP (Note 4)		–	30	–	°C
I_{RT}	Internal Source Current of RT Pin		90	100	110	μA
V_{RT-REC}	Auto Recovery−Mode Triggering Voltage		0.75	0.80	0.85	V
$V_{RT-RE-REC}$	Auto Recovery−Mode Release Voltage		V_{RT-REC} +0.15	V_{RT-REC} +0.20	V_{RT-REC} +0.25	V
$V_{RT-OTP-LEVEL}$	Threshold Voltage for Two−level Debounce Time		0.45	0.50	0.55	V
$t_{RT-OTP-H}$	Debounce Time for OTP		–	10	–	ms
$t_{RT-OTP-L}$	Debounce Time for Externally Triggering	V_{RT} < $V_{RT-OTP-LEVEL}$, T_A = 25°C	70	115	160	μs

Product parametric performance is indicated in the Electrical Characteristics for the listed test conditions, unless otherwise noted. Product performance may not be indicated by the Electrical Characteristics if operated under different conditions.

4. Guaranteed by design.

TYPICAL PERFORMANCE CHARACTERISTICS

(These characteristic graphs are normalized at T_A = 25°C)

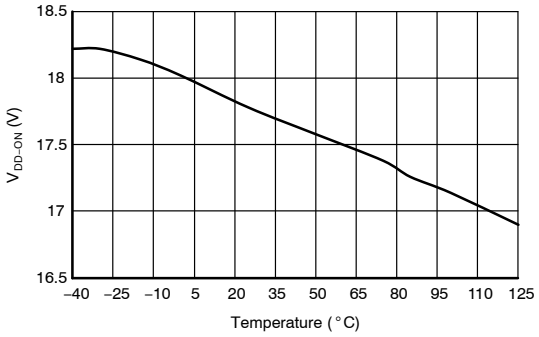

Figure 4. Turn−On Threshold Voltage

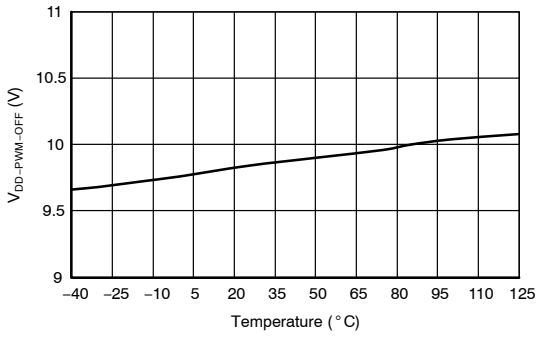

Figure 5. PWM−Off Threshold Voltage

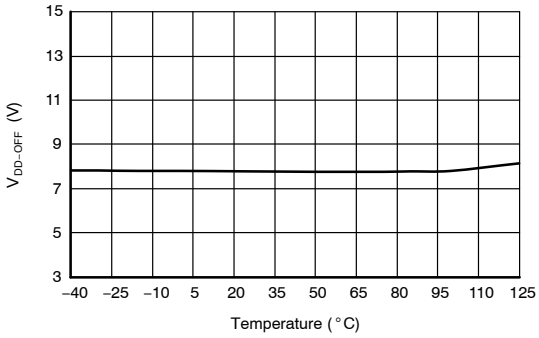

Figure 6. Turn−Off Threshold Voltage

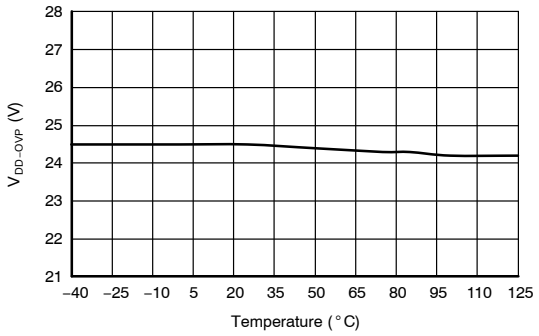

Figure 7. V_{DD} Over−Voltage Protection Threshold

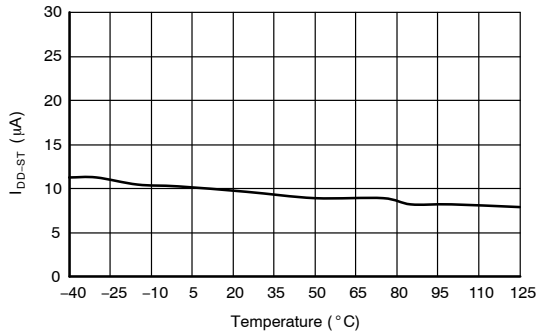

Figure 8. Startup Current

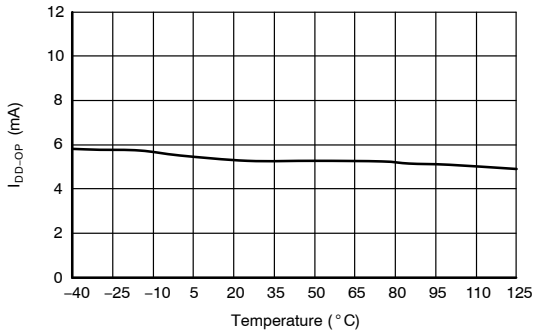

Figure 9. Operating Current

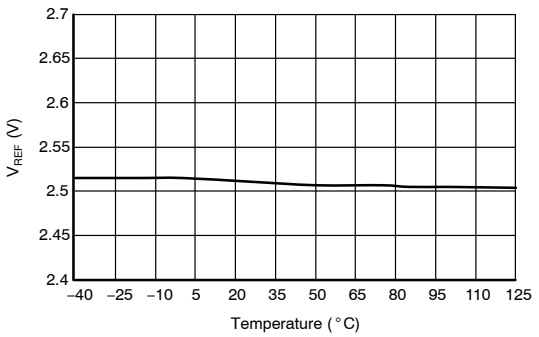

Figure 10. PFC Output Feedback Reference Voltage

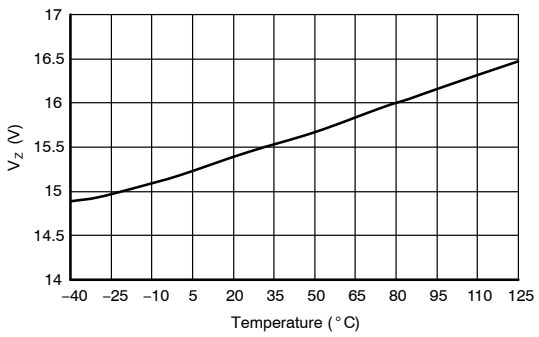

Figure 11. PFC Gate Output Clamping Voltage

TYPICAL PERFORMANCE CHARACTERISTICS

(These characteristic graphs are normalized at T_A = 25°C) (continued)

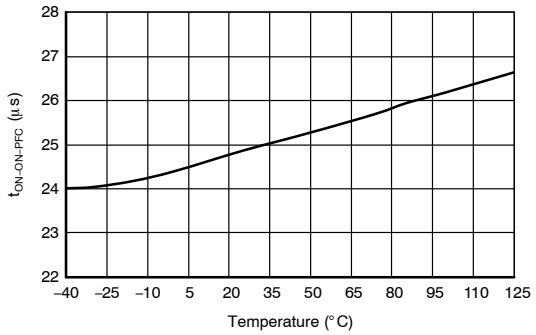

Figure 12. PFC Maximum On−Time

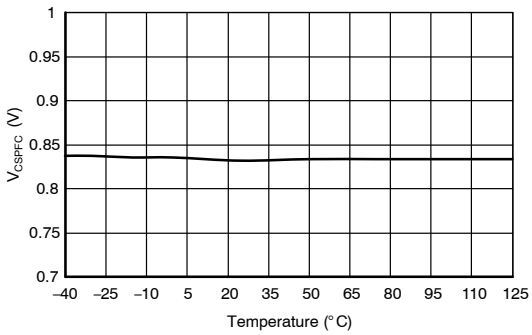

Figure 13. PFC Peak Current Limit Voltage

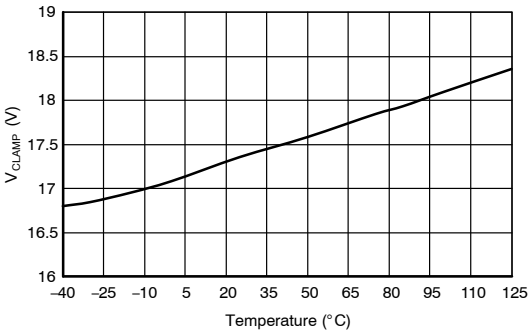

Figure 14. PWM Gate Output Clamping Voltage

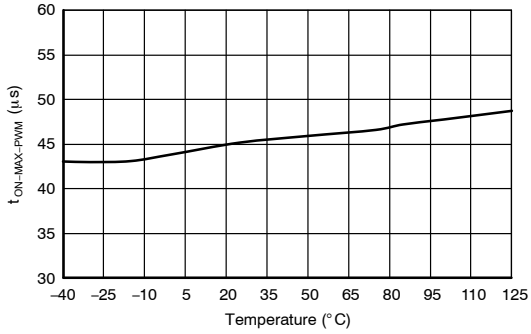

Figure 15. PWM Maximum On−Time

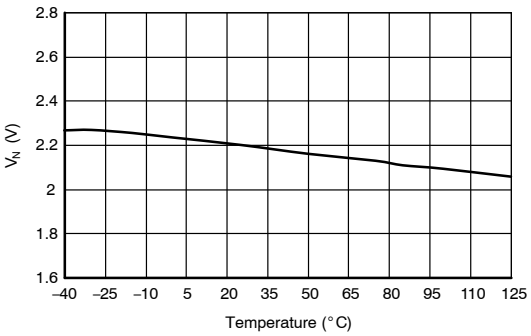

Figure 16. Beginning of Green−On Mode at V_{FB}

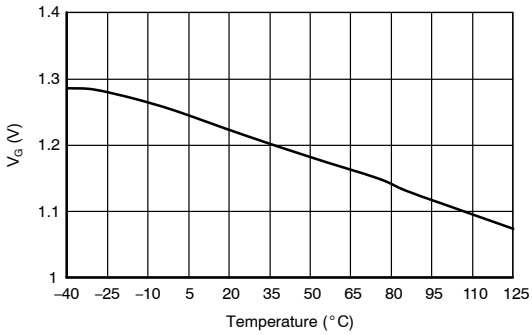

Figure 17. Beginning of Green−Off Mode at V_{FB}

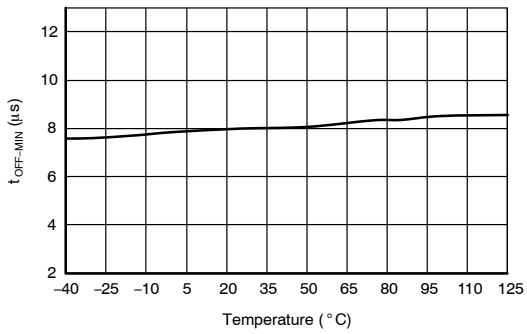

Figure 18. PWM Minimum Off Time for $V_{FB} > V_N$

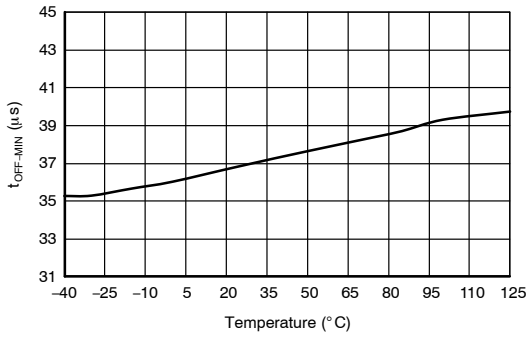

Figure 19. PWM Minimum Off Time for $V_{FB} = V_G$

TYPICAL PERFORMANCE CHARACTERISTICS

(These characteristic graphs are normalized at T_A = 25°C) (continued)

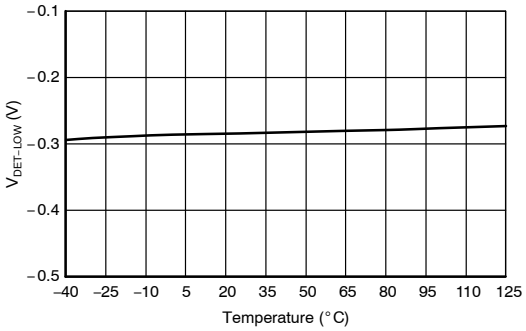

Figure 20. Lower Clamp Voltage of DET Pin

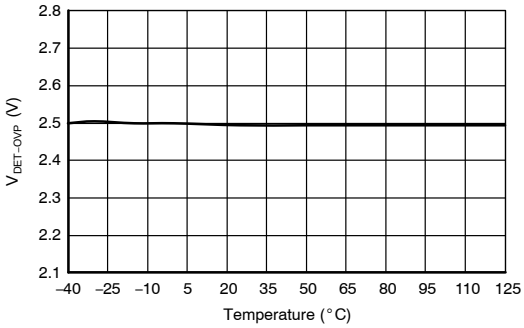

Figure 21. Reference Voltage for Output Over−Voltage Protection of DET Pin

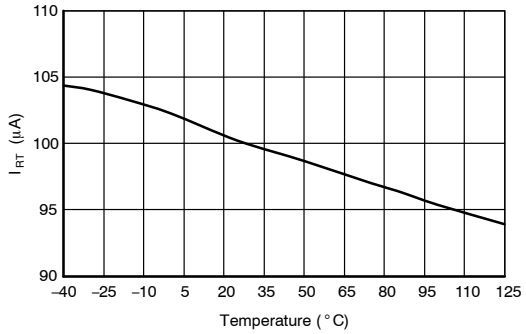

Figure 22. Internal Source Current of RT Pin

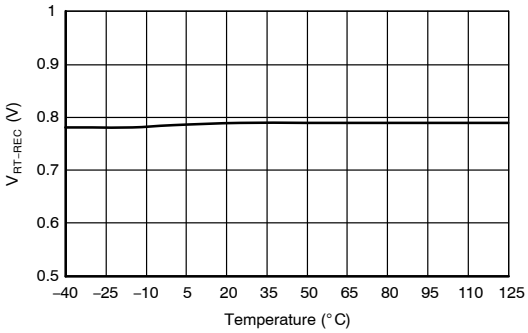

Figure 23. Over−Temperature Protection Threshold Voltage of RT Pin

FUNCTIONAL DESCRIPTION

PFC Stage

Multi−Vector Error Amplifier and THD Optimizer

For better dynamic performance, faster transient response, and precise clamping on PFC output, FL7921R uses a transconductance−type amplifier with proprietary multi−vector error amplifier. The schematic diagram of this amplifier is shown in Figure 24. The PFC output voltage is detected from the INV pin by an external resistor divider circuit that consists of R1 and R2. When PFC output variation voltage reaches 6% over or under the reference voltage 2.5 V, the multi−vector error amplifier adjusts its output sink or source current to increase the loop response to simplify the compensated circuit.

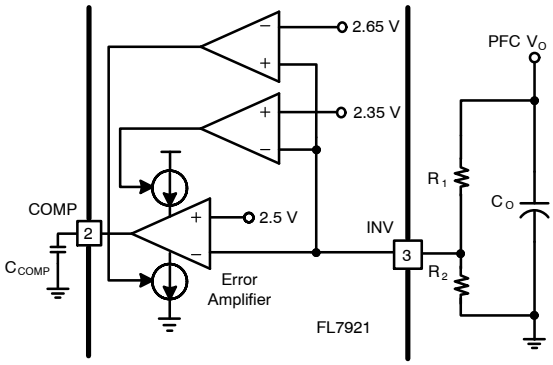

Figure 24. Multi−Vector Error Amplifier

The feedback voltage signal on the INV pin is compared with reference voltage 2.5 V, which makes the error amplifier source or sink current to charge or discharge its output capacitor C_{COMP}. The COMP voltage is compared with the internally generated sawtooth waveform to determine the on−time of PFC gate. Normally, with lower feedback loop bandwidth, the variation of the PFC gate on−time should be very small and almost constant within one input AC cycle. However, the power−factor−correction circuit operating at light−load condition has a defect, zero−crossing distortion; which distorts input current and makes the system's Total Harmonic Distortion (THD) worse. To improve the result of THD at light−load condition, especially at high input voltage, an innovative THD Optimizer is inserted by sampling the voltage across the current−sense resistor. This sampling voltage is added into the sawtooth waveform to modulate the on−time of PFC gate, so it is not constant on−time within a half AC cycle. The operation block between THD Optimizer and PWM is shown in Figure 25. After THD Optimizer processes, around the valley of AC input voltage, the compensated on−time becomes wider than the original. The PFC on−time, which is around the peak voltage, is narrowed by the THD Optimizer. The timing sequences of the PFC MOSFET and the shape of the inductor current are shown in Figure 26. Figure 27 shows the difference between calculated fixed on−time mechanism and fixed on−time with THD Optimizer during a half AC cycle.

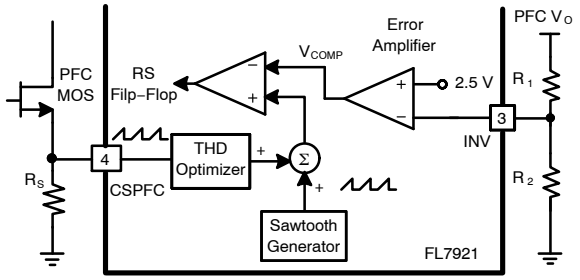

Figure 25. Multi−Vector Error Amplifier with THD Optimizer

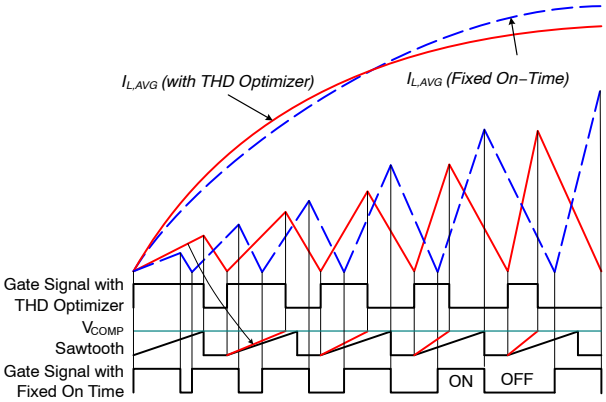

Figure 26. Operation Waveforms of Fixed On Time with and without THD Optimizer

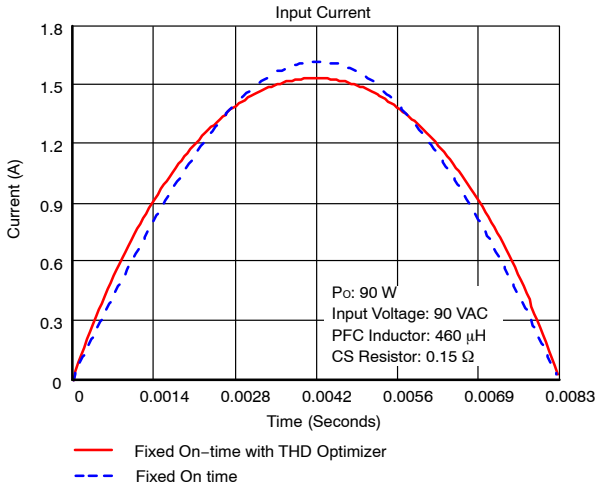

Figure 27. Calculated Waveforms of Fixed On Time with and without THD Optimizer During a Half AC Cycle

RANGE Pin

A built−in low voltage MOSFET can be turned on or off according to V_{VIN} voltage level. The drain pin of this internal MOSFET is connected to the RANGE pin. Figure 28 shows the status curve of V_{VIN} voltage level and RANGE impedance (open or ground).

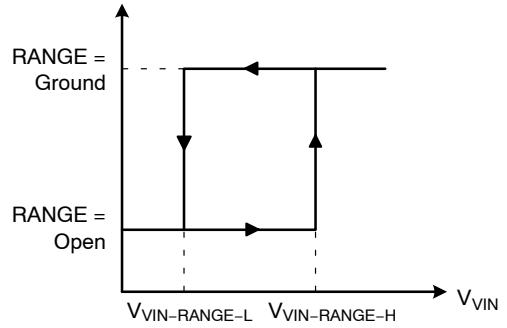

Figure 28. Hysteresis Behavior between RANGE Pin and VIN Pin Voltage

Zero−Current Detection (ZCD Pin)

Figure 29 shows the internal block of zero−current detection. The detection function is performed by sensing the information on an auxiliary winding of the PFC inductor. Referring to Figure 30, when the PFC MOSFET is off, the stored energy of the PFC inductor starts to release to the output load. Then the drain voltage of PFC MOSFET starts to decrease since the PFC inductor resonates with parasitic capacitance. Once the ZCD pin voltage is lower than the triggering voltage (1.75 V typical), the PFC gate signal is sent again to start a new switching cycle.

If PFC operation needs to be shut down due to abnormal conditions, pull the ZCD pin LOW, to a voltage under 0.2 V (typical), to activate the PFC−disable function to stop PFC switching.

For preventing excessive high−switching frequency at light load, a built−in inhibit timer is used to limit the minimum t_{OFF} time. Even if the ZCD signal has been detected, the PFC gate signal is not sent during the inhibit time (2.5 μs typical).

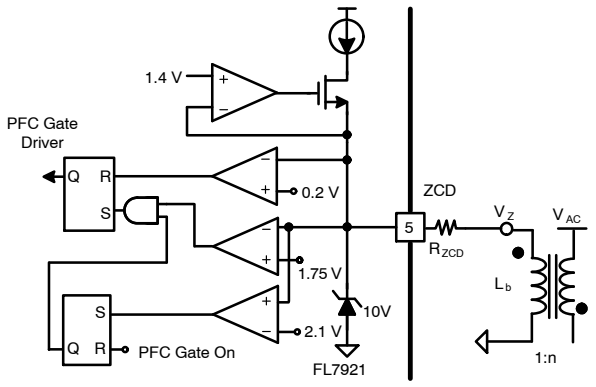

Figure 29. Zero−Current Detection

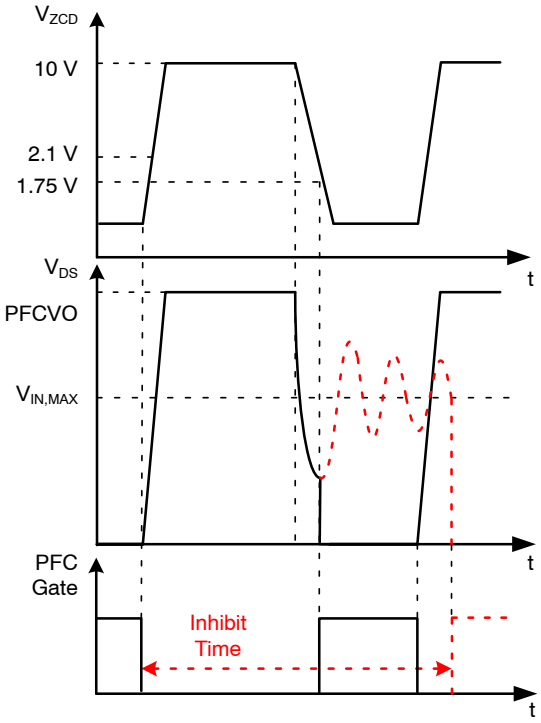

Figure 30. Operation Waveforms of PFC Zero−Current Detection

Protection for PFC Stage

PFC Output Voltage UVP and OVP (INV Pin)

FL7921R provides several kinds of protection for the PFC stage. PFC output over− and under−voltage are essential for the PFC stage. Both are detected and determined by INV pin voltage, as shown in Figure 31. When the INV pin voltage is over 2.75 V or under 0.45 V due to overshoot or abnormal conditions and lasts for a de−bounce time around 70 μs, the OVP or UVP circuit is activated to stop PFC switching operation immediately. The INV pin is not only used to receive and regulate PFC output voltage, but can also perform PFC output OVP/ UVP protection. For failure−mode test, this pin can shut down PFC switching if pin floating occurs.

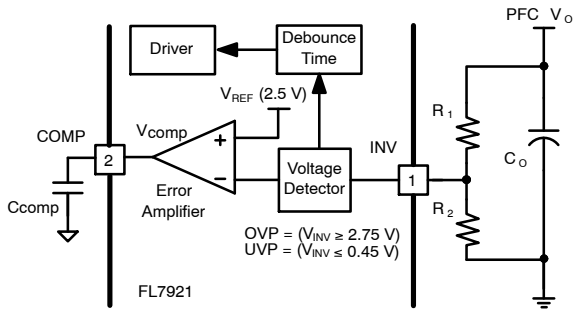

Figure 31. PFC Over− and Under−Voltage Protection

PFC Peak Current Limiting (CSPFC Pin)

During PFC stage switching operation, the PFC switch current is detected by a current−sense resistor on the CSPFC pin and the detected voltage on this resistor is delivered to the input terminal of a comparator and compared with a threshold voltage of 0.82 V (typical). Once the CSPFC pin voltage is higher than the threshold voltage, the PFC gate is turned off immediately.

The PFC peak switching current is adjustable by the current−sense resistor. Figure 32 shows the measured waveform of PFC gate and CSPFC pin voltage.

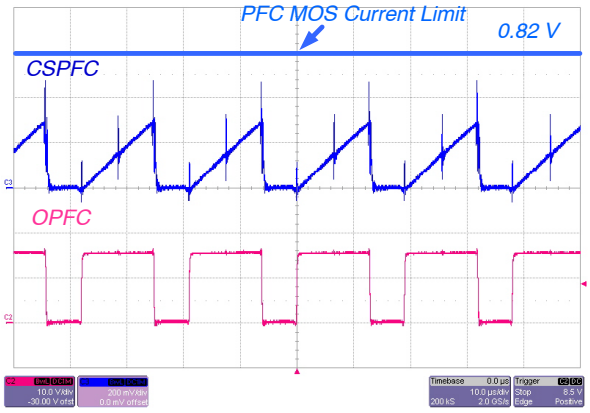

Figure 32. Cycle−by−Cycle Current Limiting

Brown−In / Out Protection (VIN Pin)

With AC voltage detection, FL7921R can perform brown−in / out protection (AC voltage UVP). Figure 33 shows the key operation waveforms of brown−in / out protection. Both use the VIN pin to detect AC input voltage level and the VIN pin is connected to AC input by a resistor divider (refer to Figure 1); therefore, the V_{VIN} voltage is proportional to the AC input voltage. When the AC voltage drops and V_{VIN} voltage is lower than 1 V for 100 ms, the UVP protection is activated and the COMP pin voltage is clamped around 1.6 V. Because PFC gate duty is determined by comparing the sawtooth waveform and COMP pin voltage, lower COMP voltage results in narrow PFC on−time, so that the energy converged is limited and the PFC output voltage decreases. When INV pin is lower than 1.2 V, FL7921R stops all PFC and PWM switching operation immediately until VDD voltage drops to turn−off voltage then rises to turn−on voltage again (UVLO).

When the brownout protection is activated, all switching operation is turned off, and VDD voltage enters “Hiccup” mode going up and down continuously. Until V_{VIN} voltage is higher than 1.3 V (typical) and VDD reaches turn−on voltage again, the PWM and PFC gate is sent out. The measured waveforms of brown−in / out protection are shown in Figure 34.

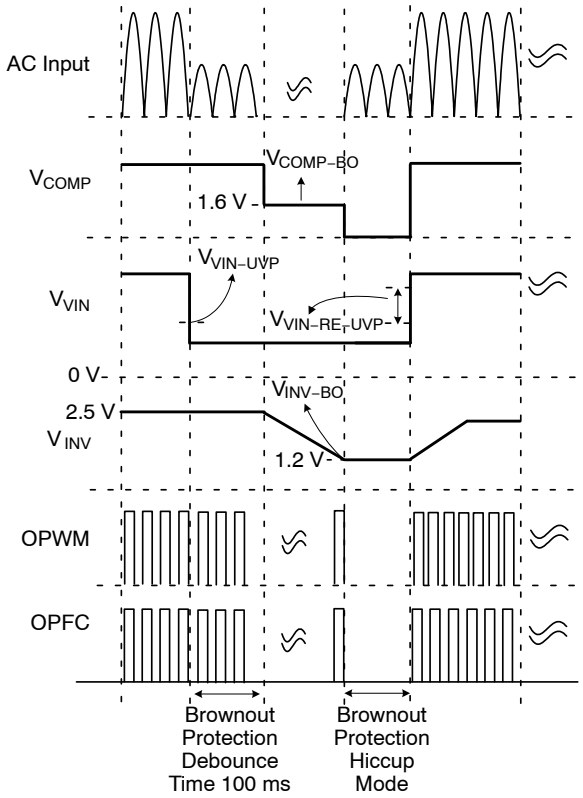

Figure 33. Operation Waveforms of Brown−In / Out Protection

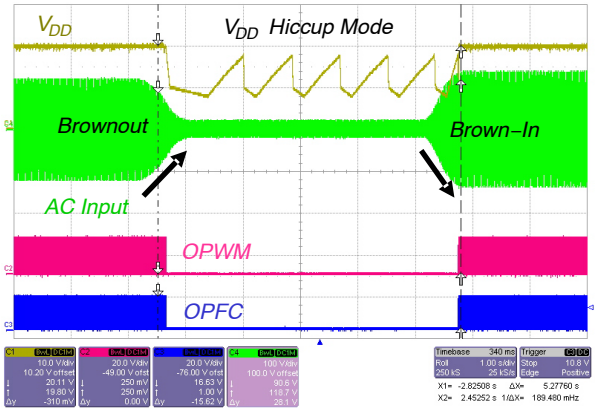

Figure 34. Measured Waveform of Brown−In / Out Protection

PWM Stage

HV Startup and Operating Current (HV Pin)

The HV pin is connected to the AC line through a resistor (refer to Figure 1). With a built−in high−voltage startup circuit, when AC voltage is applied to power system, FL7921R provides a high current to charge external V_{DD} capacitor to reduce the controller's startup time and build up normal rated output voltage within three seconds. To save power consumption, after V_{DD} voltage exceeds turn−on voltage and enters normal operation; this high−voltage startup circuit is shut down to avoid power loss from the startup resistor. Figure 35 shows the characteristic curve of V_{DD} voltage and operating current I_{DD}. When V_{DD} voltage is lower than $V_{DD-PWM-OFF}$, FL7921R stops all switching operation and turns off some internal circuits to reduce operating current. By doing so, the period from $V_{DD-PWM-OFF}$ to V_{DDOFF} can be extended and the Hiccup Mode frequency can be decreased to reduce the input power in case of output short circuit. Figure 36 shows the typical waveforms of VDD voltage and gate signal in Hiccup Mode.

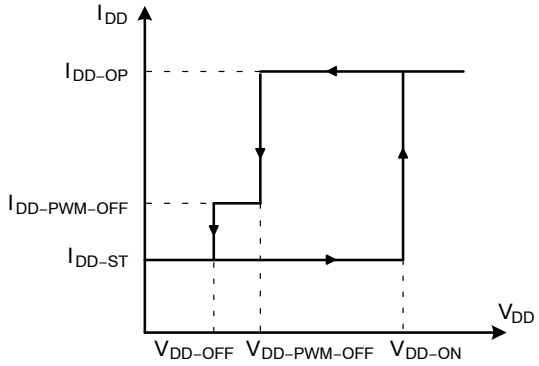

Figure 35. V_{DD} vs. I_{DD-OP} Characteristic Curve

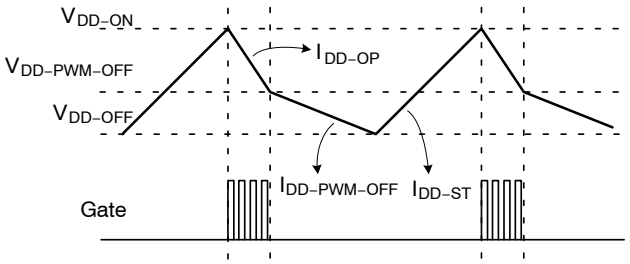

Figure 36. Typical Waveform of V_{DD} Voltage and Gate Signal in Hiccup Mode

Green Mode (FB Pin)

Green Mode is used to reduce power loss in the system (e.g. switching loss). An off−time modulation technique regulates switching frequency according to FB pin voltage. When output loading is decreased, FB voltage becomes lower due to secondary feedback movement and the $t_{OFF-MIN}$ is extended. After $t_{OFF-MIN}$ (determined by FB voltage), the internal valley−detection circuit is activated to detect the valley on the drain voltage of the PWM switch. When the valley signal is detected, FL7921R outputs PWM gate signal to turn on the switch and begin a new switching cycle.

With Green Mode and valley detection at light−load condition; the power system can perform extended valley switching in DCM operation and can further reduce switching loss for better conversion efficiency. The FB pin voltage vs. $t_{OFF-MIN}$ time characteristic curve is shown in Figure 37. Figure 37 shows, t_{OFF} time narrowed to 2.25 ms, which is around 440 Hz switching frequency.

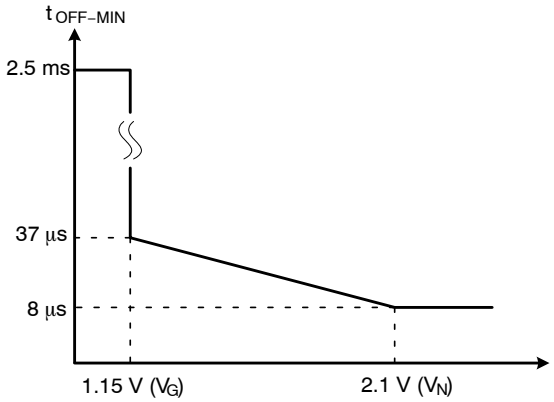

Figure 37. V_{FB} vs. $t_{OFF-MIN}$ Characteristic Curve

Valley Detection (DET Pin)

When FL7921R operates in Green Mode, $t_{OFF-MIN}$ time is determined by the Green−Mode circuit, according to FB pin voltage level. After $t_{OFF-MIN}$, the internal valley−detection circuit is activated. During the t_{OFF} time of PWM switch, when transformer inductor current discharges to zero; the transformer inductor and parasitic capacitor of PWM switch start to resonate concurrently. When the drain voltage on the PWM switch falls, the voltage across on auxiliary winding V_{AUX} also decreases since auxiliary winding is coupled to primary winding. Once the V_{AUX} voltage resonates and falls to negative, V_{DET} voltage is clamped by the DET pin (refer to Figure 38) and FL7921R is forced to flow out a current I_{DET}. FL7921R reflects and compares this I_{DET} current. If this source current rises to a threshold current, PWM gate signal is sent out after a fixed delay (200 ns typical).

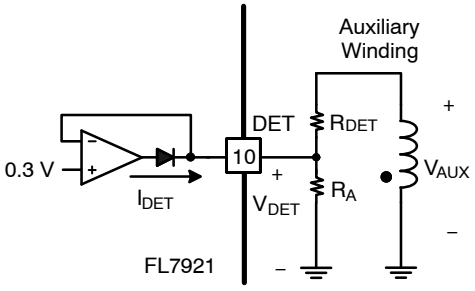

Figure 38. Valley Detection

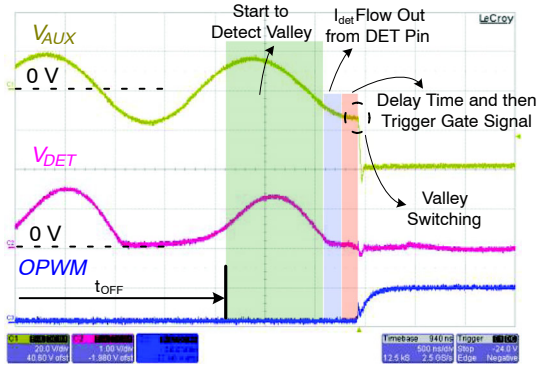

Figure 39. Measured Waveform of Valley Detection

High / Low Line Over−Power Compensation (DET Pin)

Generally, when the power switch turns off, there is a delay from gate signal falling edge to power switch off. This delay is produced by an internal propagation delay of the controller and the turn−off delay of PWM switch due to gate resistor and gate−source capacitor C_{ISS} of PWM switch. At different AC input voltage, this delay produces different maximum output power under the same PWM current limit level. Higher input voltage generates higher maximum output power since applied voltage on primary winding is higher and causes a higher rising slope inductor current. It results in a higher peak inductor current at the same delay. Furthermore, under the same output wattage, the peak switching current at high line is lower than that at low line. Therefore, to make the maximum output power close at different input voltages, the controller needs to regulate V_{LIMIT} voltage of the CSPWM pin to control the PWM switch current.

Referring to Figure 40, during t_{ON} period of the PWM switch, the input voltage is applied to primary winding and the voltage across on auxiliary winding V_{AUX} is proportional to the primary winding voltage. As the input voltage increases, the reflected voltage on the auxiliary winding V_{AUX} becomes higher as well. FL7921R also clamps the DET pin voltage and flows out a current I_{DET}. Since the current I_{DET} is in accordance with V_{AUX} voltage, FL7921R can depend on this current I_{DET} during t_{ON} period to regulate the current−limit level of the PWM switch to perform high / low line over−power compensation.

As the input voltage increases, the reflected voltage on the auxiliary winding V_{AUX} becomes higher as well as the current I_{DET} and the controller regulates the V_{LIMIT} to a lower level.

The R_{DET} resistor is connected from the auxiliary winding to the DET pin. Engineers can adjust this R_{DET} resistor to get proper V_{LIMIT} voltage to fit power system needs. The characteristic curve of I_{DET} current vs. V_{LIMIT} voltage on CSPWM pin is shown in Figure 41.

$$I_{DET} = [V_{IN} \times (N_A / N_P)] / R_{DET} \quad \text{(eq. 1)}$$

where V_{IN} is input voltage; N_A is turn number of auxiliary winding; and N_P is turn number of primary winding.

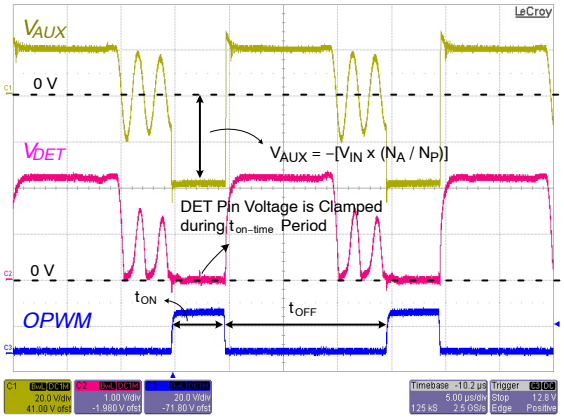

Figure 40. Relationship between V_{AUX} and V_{IN}

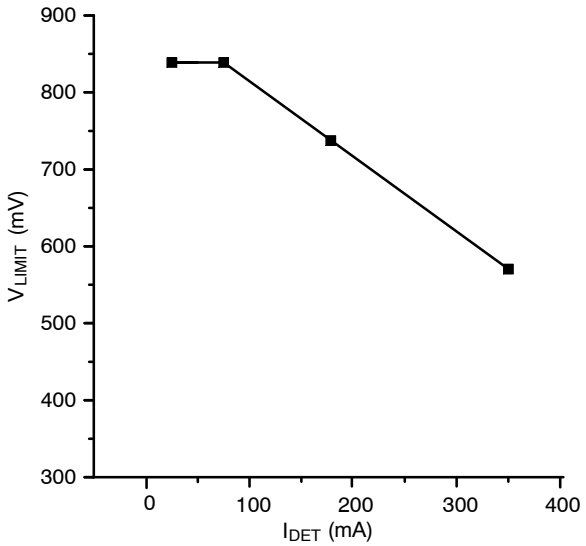

Figure 41. I_{DET} s. V_{LIMIT} Characteristic Curve

Leading−Edge Blanking (LEB)

When the PFC or PWM switches are turned on, a voltage spike is induced on the current−sense resistor due to the reciprocal effect by reverse−recovery energy of the output diode and C_{OSS} of power MOSFET. To prevent this spike, a leading−edge blanking time is built−in to FL7921R and a small RC filter is recommended between the CSPWM pi and GND (e.g. 100 Ω, 470 pF).

Protection for PWM Stage

VDD Pin Over−Voltage Protection (OVP)

VDD over−voltage protection is used to prevent device damage once VDD voltage is higher than device stress rating voltage. In case of VDD OVP, the controller enters Auto Recovery Mode.

Adjustable Over−Temperature Protection and Externally Latch Triggering (RT Pin)

Figure 42 is a typical application circuit with an internal block of RT pin. As shown, a constant current IRT flows out from the RT pin, so the voltage VRT on RT pin can be obtained as IRT current multiplied by the resistor, which consists of NTC resistor and R_{RT} resistor. If the RT pin voltage is lower than 0.8 V and lasts for a debounce time, Auto Recovery Mode is activated.

The RT pin is usually used to achieve over−temperature protection with a NTC resistor and provide external fault triggering for additional protection. Engineers can use an external triggering circuit (e.g. transistor) to pull the RT pin LOW and activate controller Auto Recovery Mode.

Generally, the external fault triggering needs to activate rapidly since it is usually used to protect power system from abnormal conditions. Therefore, the protection debounce time of the RT pin is set to around 110 μs once RT pin voltage is lower than 0.5 V.

For over−temperature protection, because the temperature does not change immediately; the RT pin voltage is reduced slowly as well. The debounce time for adjustable OTP does not need a fast reaction. To prevent improper fault triggering on the RT pin due to exacting test condition (e.g. lightning test); when the RT pin triggering voltage is higher than 0.5 V, the protection debounce time is set to around 10 ms. To avoid improper triggering on the RT pin, add a small value capacitor (e.g. 1000 pF) paralleled with NTC and RA resistor.

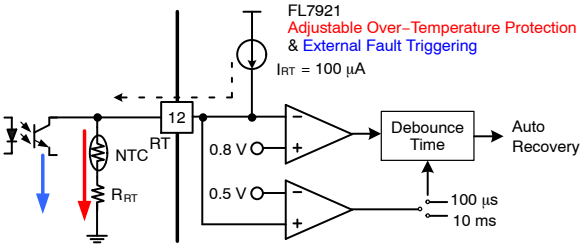

Figure 42. Adjustable Over−Temperature Protection

Output Over−Voltage Protection (DET Pin)

Referring to Figure 43, during the discharge time of PWM transformer inductor; the voltage across on auxiliary winding is reflected from secondary winding and, therefore, the flat voltage on the DET pin is proportional to the output voltage. FL7921R can sample this flat voltage level after a t_{OFF} blanking time to perform output over−voltage protection. This t_{OFF} blanking time is used to ignore the voltage ringing from leakage inductance of PWM transformer. The sampling flat voltage level is compared with internal threshold voltage 2.5 V and, once the protection is activated,FL7921R enters Auto Recovery Mode.

The controller can protect rapidly through this kind of cycle−by−cycle sampling method in the case of output over voltage. The protection voltage level can be determined by the ratio of external resistor divider RA and RDET. The flat voltage on DET pin can be expressed by the following equation:

$$V_{DET} = (N_A / N_S) \times V_O \times \frac{R_A}{R_{DET} + R_A} \quad \text{(eq. 2)}$$

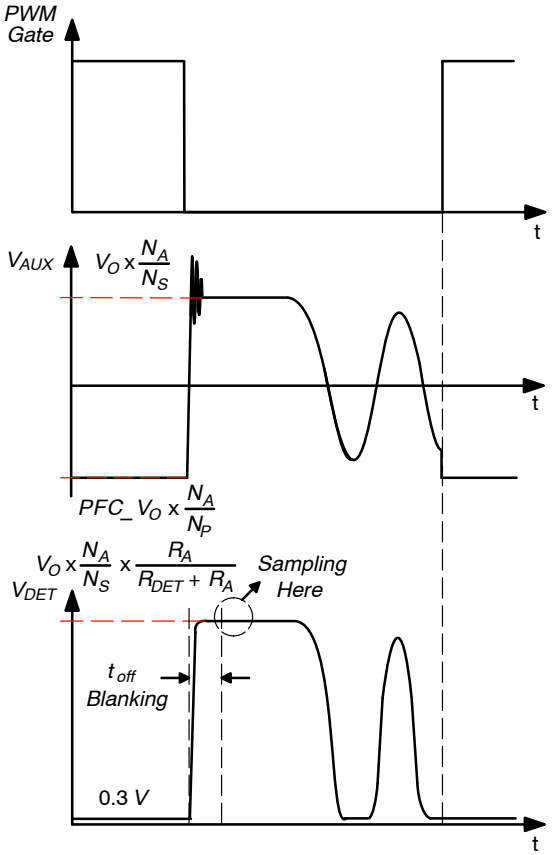

Figure 43. Operation Waveform of Output Over−Voltage Detection

Open−Loop, Short−Circuit, and Overload Protection (FB Pin)

Referring to Figure 44, outside of FL7921R, the FB pin is connected to the collector of transistor of an optocoupler. Inside of FL7921R, the FB pin is connected to an internal voltage bias through a resistor of around 5 kΩ.

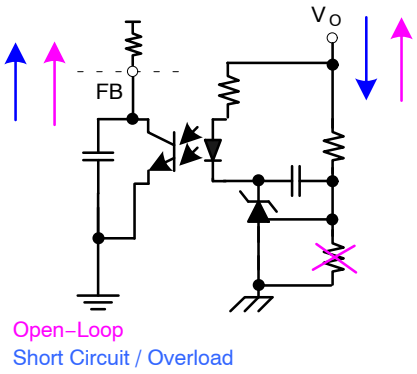

Figure 44. FB Pin Open−Loop, Short Circuit, and Overload Protection

As the output loading is increased, the output voltage is decreased and the sink current of transistor of optocoupler on primary side is reduced so the FB pin voltage is increased by internal voltage bias. In the case of an open−loop, output short−circuit, or overload condition; this sink current is further reduced and the FB pin voltage is pulled to high level by internal bias voltage. When the FB pin voltage is higher than 4.2 V for 50 ms the FB pin protection is activated.

Under−Voltage Lockout (UVLO, VDD Pin)

Referring to Figure 35 and Figure 36, the turn−on and turn−off V_{DD} threshold voltages of FL7921R are fixed at 18 V and 10 V, respectively. During startup, the hold−up capacitor (V_{DD} cap.) is charged by the HV startup current until V_{DD} voltage reaches the turn−on voltage. Before the output voltage rises to rated voltage and delivers energy to the V_{DD} capacitor from auxiliary winding, this hold−up capacitor has to sustain the V_{DD} voltage energy for operation. When V_{DD} voltage reaches turn−on voltage, FL7921R starts all switching operation if no protection is triggered before V_{DD} voltage drops to turn−off voltage $V_{DD-PWM-OFF}$.

ORDERING INFORMATION

Part Number	Protection Mode	Operating Temperature Range	Package	Shipping†
FL7921RMX	Recovery	−40°C to +125°C	16−Pin Small Outline Package (SOP) (Pb−Free)	2500 / Tape & Reel

†For information on tape and reel specifications, including part orientation and tape sizes, please refer to our Tape and Reel Packaging Specifications Brochure, BRD8011/D.

SOIC−16, 150 mils
CASE 751BG
ISSUE O

DATE 19 DEC 2008

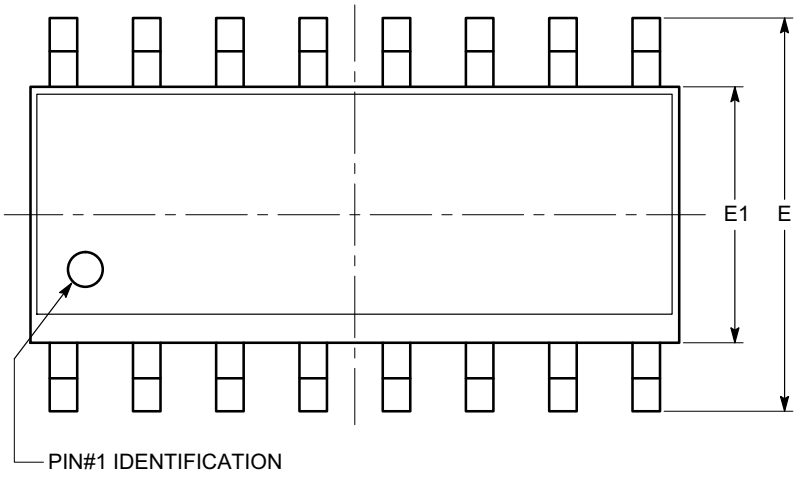

TOP VIEW

SYMBOL	MIN	NOM	MAX
A	1.35		1.75
A1	0.10		0.25
b	0.33		0.51
c	0.19		0.25
D	9.80	9.90	10.00
E	5.80	6.00	6.20
E1	3.80	3.90	4.00
e	1.27 BSC		
h	0.25		0.50
L	0.40		1.27
θ	0º		8º

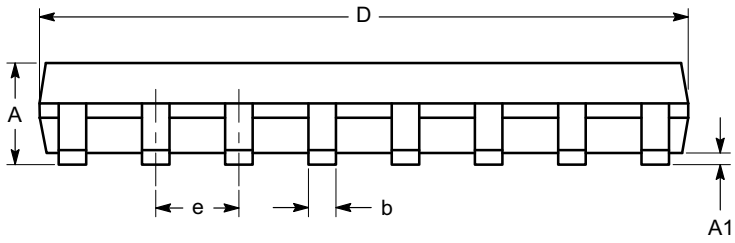

SIDE VIEW

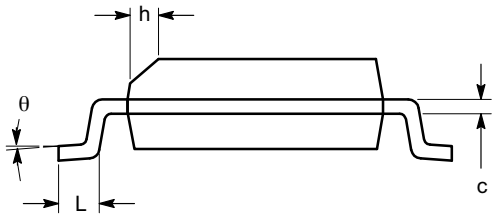

END VIEW

Notes:
(1) All dimensions are in millimeters. Angles in degrees.
(2) Complies with JEDEC MS-012.

DOCUMENT NUMBER:	**98AON34275E**	Electronic versions are uncontrolled except when accessed directly from the Document Repository. Printed versions are uncontrolled except when stamped "CONTROLLED COPY" in red.	
DESCRIPTION:	**SOIC−16, 150 mils**		**PAGE 1 OF 1**

onsemi and onsemi are trademarks of Semiconductor Components Industries, LLC dba **onsemi** or its subsidiaries in the United States and/or other countries. **onsemi** reserves the right to make changes without further notice to any products herein. **onsemi** makes no warranty, representation or guarantee regarding the suitability of its products for any particular purpose, nor does **onsemi** assume any liability arising out of the application or use of any product or circuit, and specifically disclaims any and all liability, including without limitation special, consequential or incidental damages. **onsemi** does not convey any license under its patent rights nor the rights of others.

onsemi, , and other names, marks, and brands are registered and/or common law trademarks of Semiconductor Components Industries, LLC dba "**onsemi**" or its affiliates and/or subsidiaries in the United States and/or other countries. **onsemi** owns the rights to a number of patents, trademarks, copyrights, trade secrets, and other intellectual property. A listing of **onsemi**'s product/patent coverage may be accessed at www.onsemi.com/site/pdf/Patent−Marking.pdf. **onsemi** reserves the right to make changes at any time to any products or information herein, without notice. The information herein is provided "as−is" and **onsemi** makes no warranty, representation or guarantee regarding the accuracy of the information, product features, availability, functionality, or suitability of its products for any particular purpose, nor does **onsemi** assume any liability arising out of the application or use of any product or circuit, and specifically disclaims any and all liability, including without limitation special, consequential or incidental damages. Buyer is responsible for its products and applications using **onsemi** products, including compliance with all laws, regulations and safety requirements or standards, regardless of any support or applications information provided by **onsemi**. "Typical" parameters which may be provided in **onsemi** data sheets and/or specifications can and do vary in different applications and actual performance may vary over time. All operating parameters, including "Typicals" must be validated for each customer application by customer's technical experts. **onsemi** does not convey any license under any of its intellectual property rights nor the rights of others. **onsemi** products are not designed, intended, or authorized for use as a critical component in life support systems or any FDA Class 3 medical devices or medical devices with a same or similar classification in a foreign jurisdiction or any devices intended for implantation in the human body. Should Buyer purchase or use **onsemi** products for any such unintended or unauthorized application, Buyer shall indemnify and hold **onsemi** and its officers, employees, subsidiaries, affiliates, and distributors harmless against all claims, costs, damages, and expenses, and reasonable attorney fees arising out of, directly or indirectly, any claim of personal injury or death associated with such unintended or unauthorized use, even if such claim alleges that **onsemi** was negligent regarding the design or manufacture of the part. **onsemi** is an Equal Opportunity/Affirmative Action Employer. This literature is subject to all applicable copyright laws and is not for resale in any manner.

ADDITIONAL INFORMATION

TECHNICAL PUBLICATIONS:
Technical Library: www.onsemi.com/design/resources/technical−documentation
onsemi Website: www.onsemi.com

ONLINE SUPPORT: www.onsemi.com/support
For additional information, please contact your local Sales Representative at www.onsemi.com/support/sales