mWSaver Technology Integrated Critical-Mode PFC and Quasi-Resonant Current-Mode PWM Controller

FAN6920MR

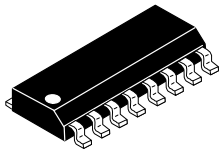

SOIC−16, 150 mils
CASE 751BG−01

DEVICE NOT RECOMMENDED FOR NEW DESIGN

MARKING DIAGRAM

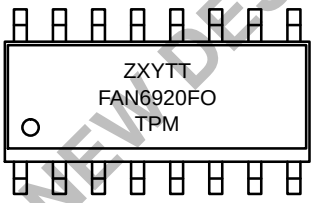

FAN6920	= Specific Device Code
Z	= Plant Code
X	= Year Code
Y	= Week Code
TT	= DIe−Run Code
F	= Frequency (M = Low, H = High Level)
O	= OLP Mode (L = Latch, R = Recovery)
T	= Package Type (M = SOP)
P	= Y = Green Package
M	= Manufacture Flow Code

ORDERING INFORMATION

See detailed ordering and shipping information on page 20 of this data sheet.

Description

The highly integrated FAN6920MR combines Power Factor Correction (PFC) controller and quasi−resonant PWM controller. Integration provides cost−effective design and reduces external components.

For PFC, FAN6920MR uses a controlled on−time technique to provide a regulated DC output voltage and to perform natural power−factor correction. With an innovative THD optimizer, FAN6920MR can reduce input current distortion at zero−crossing duration to improve THD performance.

For PWM, FAN6920MR provides several functions to enhance the power system performance: valley detection, green−mode operation, and high / low line over−power compensation. Protection functions include secondary− side open−loop and over−current with auto−recovery protection; external auto−recovery triggering; adjustable over−temperature protection by the RT pin; and external NTC resistor, internal over−temperature shutdown, V_{DD} pin OVP, and the DET pin over−voltage for output OVP, and brown−in / out for AC input voltage UVP.

The FAN6920MR controller is available in a 16−pin small−outline package (SOP).

Features

- mWSaver Technology Provides Industry's Best−in−Class Standby Power
  - Internal High−Voltage JFET Startup
  - Adaptive Off−Time Modulation of $t_{OFF−MIN}$ for QR PWM Stage, Improved Light−Load Efficiency
  - PFC Burst or Shutdown at Light−Load Condition
  - Optimized for Dual Switch Flyback Design to Achieve >90% Efficiency While Meeting 2013 ErP Lot 6 Standby Power Requirement
- Integrated PFC and Flyback Controller
- Critical−Mode PFC Controller
- Zero−Current Detection for PFC Stage
- Quasi−Resonant Operation for PWM Stage
- Internal 5 ms Soft−Start for PWM
- Brownout Protection
- High / Low Line Over−Power Compensation
- Auto−Recovery Over−Current Protection
- Auto−Recovery Open−Loop Protection

Features (continued)

- Externally Auto−Recovery Triggering (RT Pin)
- Adjustable Over−Temperature Protection
- VDD Pin and Output Voltage OVP (Auto−Recovery)
- Internal Over−Temperature Shutdown (140°C)
- This is a Pb−Free Device

Applications

- AC/DC NB Adapters
- Open−Frame SMPS
- Battery Charger

Related Resources

- Evaluation Board: FEBFAN6920MR_T02U120A

© Semiconductor Components Industries, LLC, 2012

APPLICATION DIAGRAM

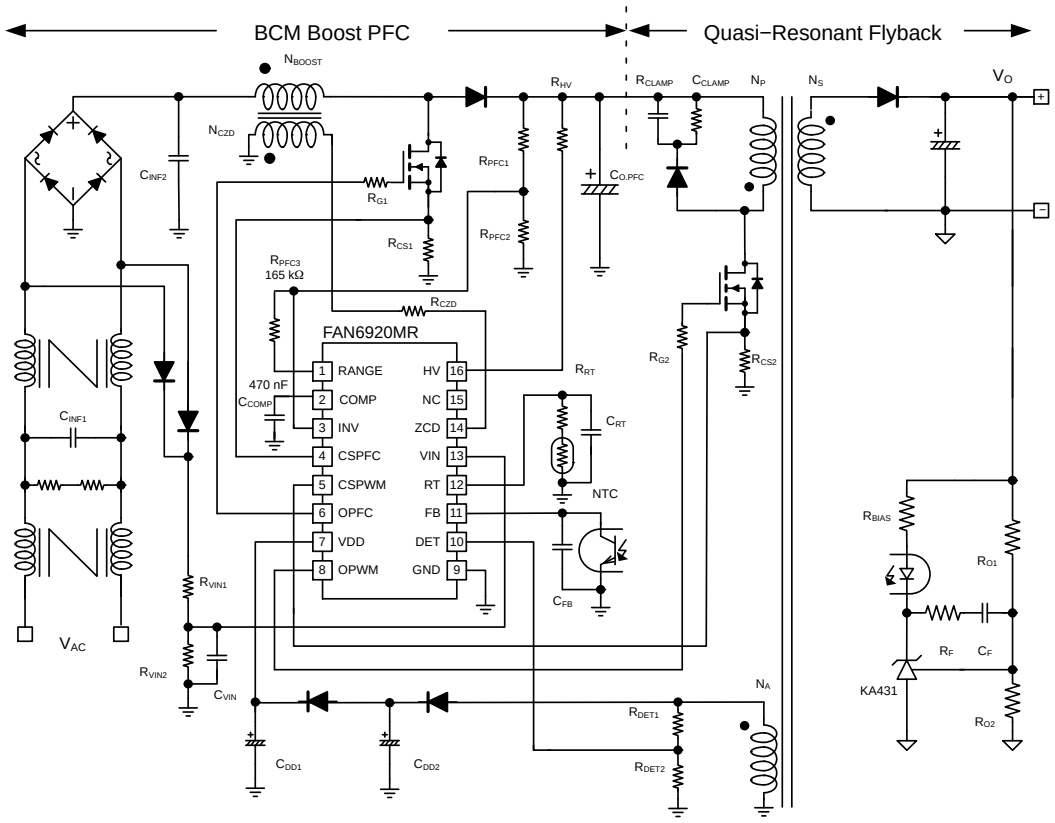

Figure 1. Typical Application Circuit

INTERNAL BLOCK DIAGRAM

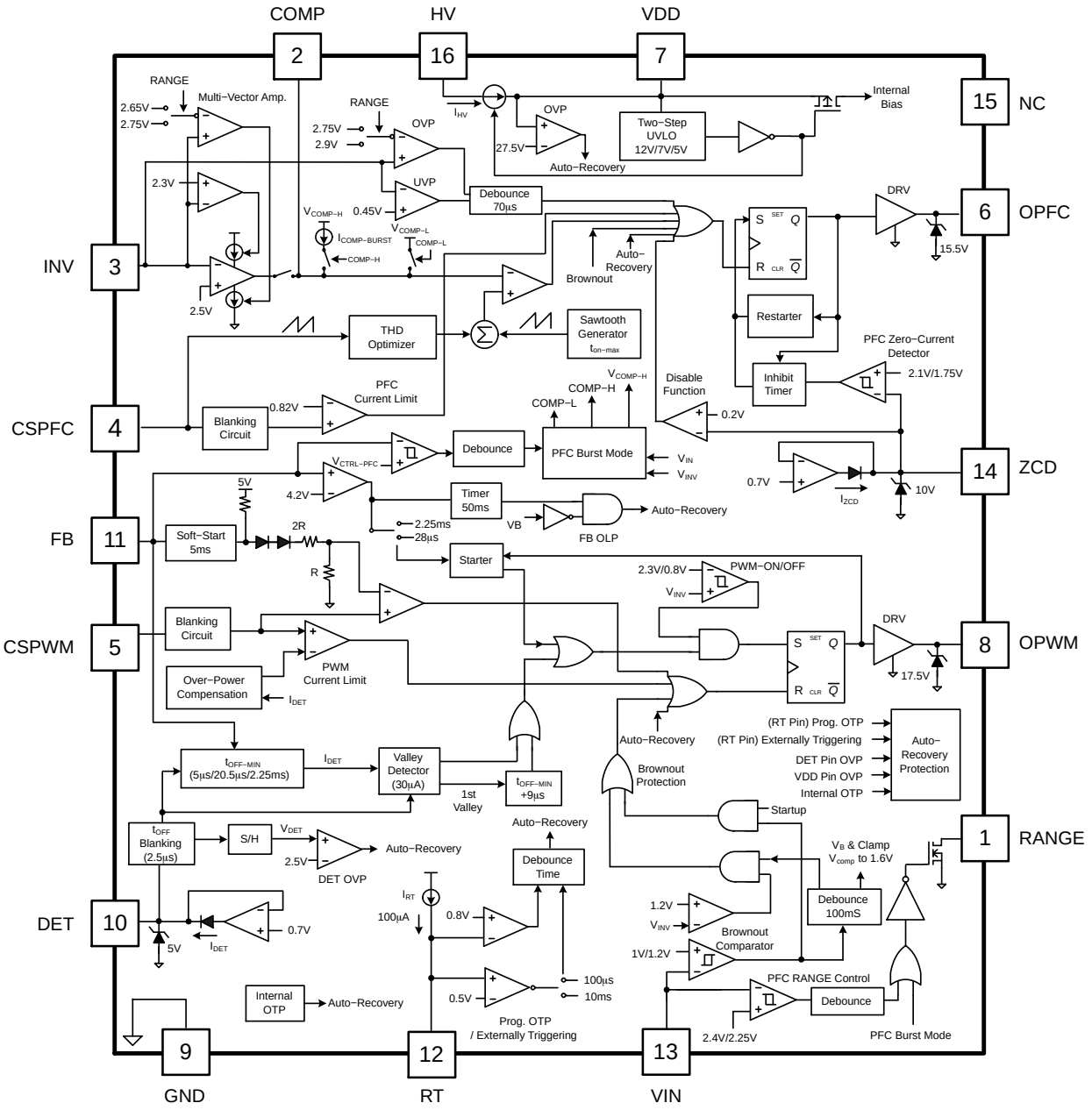

Figure 2. Functional Block Diagram

PIN CONFIGURATION

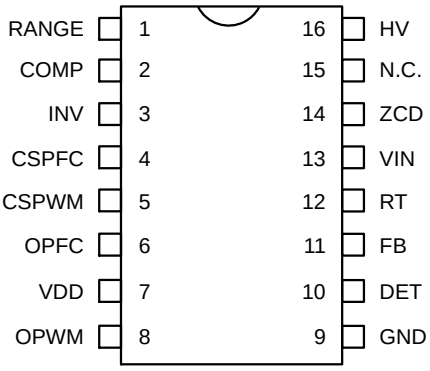

Figure 3. Pin Configuration

PIN DEFINITIONS

Pin No.	Name	Description
1	RANGE	The RANGE pin's impedance changes according to VIN pin voltage level. When the input voltage detected by the VIN pin is higher than a threshold voltage, it sets to low impedance; whereas it sets to high impedance if input voltage is at a high level.
2	COMP	Output pin of the error amplifier. It is a transconductance−type error amplifier for PFC output voltage feedback. Proprietary multi−vector current is built−in to this amplifier; therefore, the compensation for PFC voltage feedback loop allows a simple compensation circuit between this pin and GND.
3	INV	Inverting input of the error amplifier. This pin is used to receive PFC voltage level by a voltage divider and provides PFC output over− and under−voltage protections. This pin also controls the PWM startup. Once the FAN6920MR is turned on and V_{INV} exceeds in 2.3 V, PWM starts.
4	CSPFC	Input to the PFC over−current protection comparator that provides cycle−by−cycle current limiting protection. When the sensed voltage across the PFC current−sensing resistor reaches the internal threshold (0.82 V typical), the PFC switch is turned off to activate cycle−by−cycle current limiting.
5	CSPWM	Input to the comparator of the PWM over−current protection and performs PWM current−mode control with FB pin voltage. A resistor is used to sense the switching current of the PWM switch and the sensing voltage is applied to the CSPWM pin for the cycle−by−cycle current limit, current−mode control, and high / low line over−power compensation according to DET pin source current during PWM t_{ON} time.
6	OPFC	Totem−pole driver output to drive the external power MOSFET. The clamped gate output voltage is 15.5 V.
7	VDD	Power supply. The threshold voltages for startup and turn−off are 12 V and 7 V, respectively. The startup current is less than 30 μA and the operating current is lower than 10 mA.
8	OPWM	Totem−pole output generates the PWM signal to drive the external power MOSFET. The clamped gate output voltage is 17.5 V.
9	GND	The power ground and signal ground.
10	DET	This pin is connected to an auxiliary winding of the PWM transformer through a resistor divider for the following purposes: ● Producing an offset voltage to compensate the threshold voltage of PWM current limit for overpower compensation. The offset is generated in accordance with the input voltage when the PWM switch is on. ● Detecting the valley voltage signal of drain voltage of the PWM switch to achieve the valley voltage switching and minimize the switching loss on the PWM switch. ● Providing output over−voltage protection. A voltage comparator is built in to the DET pin. The DET pin detects the flat voltage through a voltage divider paralleled with auxiliary winding. This flat voltage is reflected to the secondary winding during PWM inductor discharge time. If output over voltage and this flat voltage are higher than 2.5 V, the controller stops all PFC and PWM switching operation. The protection mode is auto−recovery.
11	FB	Feedback voltage pin used to receive the output voltage level signal to determine PWM gate duty for regulating output voltage. The FB pin voltage can also activate open−loop, overload protection and output−short circuit protection if the FB pin voltage is higher than a threshold of around 4.2 V for more than 50 ms. The input impedance of this pin is a 5 kΩ equivalent resistance. A 1/3 attenuator is connected between the FB pin and the input of the CSPWM/FB comparator.

PIN DEFINITIONS (continued)

Pin No.	Name	Description
12	RT	Adjustable over−temperature protection and external protection triggering. A constant current flows out from the RT pin. When RT pin voltage is lower than 0.8 V (typical), protection is activated and stops PFC and PWM switching operation. This protection is auto−recovery.
13	VIN	Line−voltage detection for brownin / out protections. This pin can receive the AC input voltage level through a voltage divider. The voltage level of the VIN pin is not only used to control RANGE pin's status, but it can also perform brownin / out protection for AC input voltage UVP.
14	ZCD	Zero−current detection for the PFC stage. This pin is connected to an auxiliary winding coupled to PFC inductor winding to detect the ZCD voltage signal once the PFC inductor current discharges to zero. When the ZCD voltage signal is detected, the controller starts a new PFC switching cycle. When the ZCD pin voltage is pulled to under 0.2 V (typical), it disables the PFC stage and the controller stops PFC switching. This can be realized with an external circuit if disabling the PFC stage is desired.
15	NC	No connection
16	HV	High−voltage startup pin is connected to the AC line voltage through a resistor (100 kΩ typical) for providing a high charging current to V_{DD} capacitor.

ABSOLUTE MAXIMUM RATINGS

Symbol	Parameter	Min	Max	Unit
V_{DD}	DC Supply Voltage	−	30	V
V_{HV}	HV	−	500	V
V_H	OPFC, OPWM	−0.3	25.0	V
V_L	INV, COMP, CSPFC, DET, FB, CSPWM, RT, VIN, RANGE	−0.3	7.0	V
V_{ZCD}	Input Voltage to ZCD Pin	−0.3	12.0	V
P_D	Power Dissipation	−	800	mW
θ_{JA}	Thermal Resistance (Junction−to−Air)	−	104	°C/W
θ_{JC}	Thermal Resistance (Junction−to−Case)	−	41	°C/W
T_J	Operating Junction Temperature	−40	+150	°C
T_{STG}	Storage Temperature Range	−55	+150	°C
T_L	Lead Temperature (Soldering, 10 Seconds)	−	+260	°C
ESD	Human Body Model, JESD22−A114 (All Pins Except HV Pin) (Note 3)	−	4500	V
	Charged Device Model, JESD22−C101 (All Pins Except HV Pin) (Note 3)	−	1250	

Stresses exceeding those listed in the Maximum Ratings table may damage the device. If any of these limits are exceeded, device functionality should not be assumed, damage may occur and reliability may be affected.

1. Stresses beyond those listed under Absolute Maximum Ratings may cause permanent damage to the device.
2. All voltage values, except differential voltages, are given with respect to the GND pin.
3. All pins including HV pin: CDM = 750 V, HBM 1000 V.

ELECTRICAL CHARACTERISTICS (V_{DD} = 15 V and T_A = 25°C unless otherwise noted)

Symbol	Parameter	Conditions	Min	Typ	Max	Unit
V_{DD} Section						
V_{OP}	Continuously Operating Voltage		−	−	25	V
V_{DD-ON}	Turn−On Threshold Voltage		10.5	12.0	13.5	V
$V_{DD-PWM-OFF}$	PWM Off Threshold Voltage		6	7	8	V
V_{DD-OFF}	Turn−Off Threshold Voltage		4	5	6	V
I_{DD-ST}	Startup Current	V_{DD} = V_{DD-ON} − 0.16 V, Gate Open	−	20	30	μA
I_{DD-OP}	Operating Current	V_{DD} = 15 V, OPFC, OPWM = 100 kHz, C_{L-PFC}, C_{L-PWM} = 2 nF	−	−	10	mA
$I_{DD-GREEN}$	Green−Mode Operating Supply Current (Average)	V_{DD} = 15 V, OPWM = 450 Hz, C_{L-PWM} = 2 nF	−	5.5	−	mA
$I_{DD-PWM-OFF}$	Operating Current at PWM−Off Phase	V_{DD} = $V_{DD-PWM-OFF}$ − 0.5 V	70	120	170	μA
V_{DD-OVP}	V_{DD} Over−Voltage Protection (Auto−Recovery)		26.5	27.5	28.5	V
$t_{VDD-OVP}$	V_{DD} OVP Debounce Time		100	150	200	μs
HV Startup Current Source Section						
I_{HV}	Supply Current Drawn from HV Pin	V_{AC} = 90 V, (V_{DC} = 120 V), V_{DD} = 0 V	1.3	−	−	mA
		HV = 500 V, V_{DD} = V_{DD-OFF} +1 V	−	1.0	−	μA
VIN and RANGE Section						
$V_{VIN-UVP}$	Threshold Voltage for AC Input Under−Voltage Protection		0.95	1.00	1.05	V
$V_{VIN-RE-UVP}$	Under−Voltage Protection Reset Voltage		$V_{VIN-UVP}$ +0.15 V	$V_{VIN-UVP}$ +0.20 V	$V_{VIN-UVP}$ +0.25 V	V
$t_{VIN-UVP}$	Under−Voltage Protection Debounce Time		70	100	130	ms
$V_{VIN-RANGE-H}$	High V_{VIN} Threshold for RANGE Comparator		2.40	2.45	2.50	V
$V_{VIN-RANGE-L}$	Low V_{VIN} Threshold for RANGE Comparator		2.20	2.25	2.30	V
t_{RANGE}	Range−Enable / Disable Debounce Time		60	90	120	ms
$V_{RANGE-OL}$	Output Low Voltage of RANGE Pin	I_O = 1 mA	−	−	0.5	V
$I_{RANGE-OH}$	Output High Leakage Current of RANGE Pin	RANGE = 5 V	−	−	50	nA
$t_{ON-MAX-PFC}$	PFC Maximum On Time	R_{MOT} = 24 kΩ	22	25	28	μs
PFC STAGE						
Voltage Error Amplifier Section						
Gm	Transconductance (Note 4)		100	125	150	μmho
V_{REF}	Feedback Comparator Reference Voltage		2.465	2.500	2.535	V
V_{INV-H}	Clamp High Feedback Voltage	RANGE = Open	2.70	2.75	2.80	V
		RANGE = Ground	2.60	2.65	2.70	
V_{RATIO}	Clamp High Output Voltage Ratio (Note 4)	V_{INV-H} / V_{REF}, RANGE = Open	1.06	−	1.14	V/V
		V_{INV-H} / V_{REF}, RANGE = Ground	1.04	−	1.08	
V_{INV-L}	Clamp Low Feedback Voltage		2.25	2.35	2.45	V

ELECTRICAL CHARACTERISTICS (V_{DD} = 15 V and T_A = 25°C unless otherwise noted) (continued)

Symbol	Parameter	Conditions	Min	Typ	Max	Unit
Voltage Error Amplifier Section						
$V_{INV-OVP}$	Over−Voltage Protection for INV Input	RANGE = Open	−	2.90	2.95	V
		RANGE = Ground	−	2.75	2.80	
$t_{INV-OVP}$	Over−Voltage Protection Debounce Time		50	70	90	μs
$V_{INV-UVP}$	Under−Voltage Protection for INV Input		0.35	0.45	0.55	V
$V_{INV-PWMON}$	PWM ON Threshold Voltage on INV Pin		2.2	2.3	2.4	V
$V_{HYST-PWMON}$	Hysteresis for PWM ON Threshold Voltage on INV Pin		$V_{INV-PWMON}$ −1.6	$V_{INV-PWMON}$ −1.5	$V_{INV-PWMON}$ −1.4	V
$t_{INV-UVP}$	Under−Voltage Protection Debounce Time		50	70	90	μs
V_{INV-BO}	PWM and PFC Off Threshold for Brownout Protection		1.15	1.20	1.25	V
$V_{COMP-BO}$	Limited Voltage on COMP Pin for Brownout Protection		1.55	1.60	1.65	V
$I_{COMP-BURST}$	Internal Bias Current for PFC Burst Mode		120	150	180	μA
V_{COMP-H}	Comparator Output High Voltage		4.80	−	5.20	V
	Comparator Output High Voltage at PFC Burst Mode	V_{FB} = 1.3 V, V_{VIN} = 1.2 V	2.20	2.30	2.40	
		V_{FB} = 1.3 V, V_{VIN} = 1.6 V	2.00	2.10	2.20	
		V_{FB} = 1.3 V, V_{VIN} = 2 V	1.80	1.90	2.00	
V_{COMP-L}	Comparator Output Low Voltage at PFC Burst Mode	RANGE = Open, V_{FB} = 1.3 V	0.9	1.0	1.1	V
V_{OZ}	Zero Duty Cycle Voltage on COMP Pin		1.10	1.25	1.40	V
I_{COMP}	Comparator Output Source Current	V_{INV} = 2.3 V, V_{COMP} = 1.5 V	15	30	45	μA
		V_{INV} = 1.5 V	0.50	0.75	1.00	mA
	Comparator Output Sink Current	RANGE = Open, V_{INV} = 2.75 V, V_{COMP} = 5 V	20	30	40	μA
		RANGE = Ground, V_{INV} = 2.65 V, V_{COMP} = 5 V	20	30	40	
PFC Current−Sense Section						
V_{CSPFC}	Threshold Voltage for Peak Current Cycle−by−Cycle Limit	V_{COMP} = 5 V	0.77	0.82	0.87	V
t_{PD}	Propagation Delay		−	110	200	ns
t_{BNK}	Leading−Edge Blanking Time		110	180	250	ns
A_V	CSPFC Compensation Ratio for THD		0.90	0.95	1.00	V/V
PFC Output Section						
V_Z	PFC Gate Output Clamping Voltage	V_{DD} = 25 V	14.0	15.5	17.0	V
V_{OL}	PFC Gate Output Voltage Low	V_{DD} = 15 V, I_O = 100 mA	−	−	1.5	V
V_{OH}	PFC Gate Output Voltage High	V_{DD} = 15 V, I_O = 100 mA	8	−	−	V
t_R	PFC Gate Output Rising Time	V_{DD} = 12 V, C_L = 3 nF, 20~80%	30	65	100	ns
t_F	PFC Gate Output Falling Time	V_{DD} = 12 V, C_L = 3 nF, 80~20%	30	50	70	ns

ELECTRICAL CHARACTERISTICS (V_{DD} = 15 V and T_A = 25°C unless otherwise noted) (continued)

Symbol	Parameter	Conditions	Min	Typ	Max	Unit
PFC Zero−Current Detection Section						
V_{ZCD}	Input Threshold Voltage Rising Edge	V_{ZCD} Increasing	1.9	2.1	2.3	V
$V_{ZCD-HYST}$	Threshold Voltage Hysteresis	V_{ZCD} Decreasing	0.25	0.35	0.45	V
$V_{ZCD-HIGH}$	Upper Clamp Voltage	I_{ZCD} = 3 mA	8	10	−	V
$V_{ZCD-LOW}$	Lower Clamp Voltage		0.35	0.45	0.55	V
$V_{ZCD-SSC}$	Starting Source Current Threshold Voltage		0.70	0.90	1.10	V
t_{DELAY}	Maximum Delay from ZCD to Output Turn−On	V_{COMP} = 5 V, f_S = 60 kHz	100	−	200	ns
$t_{RESTART-PFC}$	Restart Time		300	500	700	μs
t_{INHIB}	Inhibit Time (Maximum Switching Frequency Limit)	V_{COMP} = 5 V	1.5	2.5	3.5	μs
$V_{ZCD-DIS}$	PFC Enable / Disable Function Threshold Voltage		0.15	0.20	0.25	V
$t_{ZCD-DIS}$	PFC Enable / Disable Function Debounce Time	V_{ZCD} = 100 mV	100	150	200	μs
PWM STAGE						
Feedback Input Section						
A_V	Input−Voltage to Current Sense Attenuation (Note 4)	$A_V = \Delta V_{CS} / \Delta V_{FB}$, $0 < V_{CS} < 0.9$	1/2.75	1/3.00	1/3.25	V/V
Z_{FB}	Input Impedance (Note 4)	$V_{FB} > V_G$	3	5	7	kΩ
I_{OZ}	Bias Current	$V_{FB} = V_{OZ}$	−	1.2	2.0	mA
V_{OZ}	Zero Duty Cycle Input Voltage		0.7	0.9	1.1	V
V_{FB-OLP}	Open−Loop Protection Threshold Voltage		3.9	4.2	4.5	V
t_{FB-OLP}	The Debounce Time for Open−Loop Protection		40	50	60	ms
t_{FB-SS}	Internal Soft−Start Time (Note 4)	V_{FB} = 0 V~3.6 V	4	5	6	ms
DET Pin OVP and Valley Detection Section						
$V_{DET-OVP}$	Comparator Reference Voltage		2.45	2.50	2.55	V
Av	Open−Loop Gain (Note 4)		−	60	−	dB
BW	Gain Bandwidth (Note 4)		−	1	−	MHz
$t_{DET-OVP}$	Output OVP (Auto−Recovery) Debounce Time		100	150	200	μs
$I_{DET-SOURCE}$	Maximum Source Current	V_{DET} = 0 V	−	−	1	mA
$V_{DET-LOW}$	Lower Clamp Voltage	I_{DET} = 1 mA	0.15	0.25	0.35	V
$t_{VALLEY-DELAY}$	Delay Time from Valley Signal Detected to Output Turn−On (Note 4)		150	200	250	ns
$t_{OFF-BNK}$	Leading−Edge Blanking Time for DET−OVP (2.5 V) and Valley Signal when PWM MOS Turns Off (Note 4)		−	2.5	−	μs
$t_{TIME-OUT}$	Time−Out After $t_{OFF-MIN}$ (Note 4)		8	9	10	μs
PWM Oscillator Section						
$t_{ON-MAX-PWM}$	Maximum On−Time		38	45	52	μs
$t_{OFF-MIN}$	Minimum Off−Time	$V_{FB} \geq V_N$, T_A = 25°C	−	5	−	μs
		$V_{FB} = V_G$	−	20.5	−	
V_N	Beginning of Green−On Mode at FB Voltage Level		1.95	2.10	2.25	V
V_G	Beginning of Green−Off Mode at FB Voltage Level		1.00	1.15	1.30	V
ΔV_G	Hysteresis for Beginning of Green−Off Mode at FB Voltage Level (Note 4)		−	0.1	−	V

ELECTRICAL CHARACTERISTICS (V_{DD} = 15 V and T_A = 25°C unless otherwise noted) (continued)

Symbol	Parameter	Conditions	Min	Typ	Max	Unit
PWM Oscillator Section						
$V_{CTRL-PFC-BM}$	Threshold Voltage on FB Pin for PFC Burst Mode	RANGE Pin Internally Open	1.65	1.70	1.75	V
		RANGE Pin Internally Ground	1.60	1.65	1.70	
$V_{CTRL-PFC-ON}$	Threshold Voltage on FB Pin for PFC Normal Operating		1.75	1.80	1.85	V
t_{PFC-BM}	Debounce Time for PFC Burst Mode	PFC Normal Operating → Burst Mode	−	100	−	ms
t_{PFC-ON}	Debounce Time for PFC Recovery to Normal Operating	PFC Burst Mode → Normal Operating	−	200	−	μs
$t_{STARTER-PWM}$	Start Timer (Time−Out Timer)	V_{FB} < V_G, T_A = 25°C	1.85	2.25	2.65	ms
		V_{FB} > V_{FB-OLP}, T_A = 25°C	22	28	34	μs
PWM Output Section						
V_{CLAMP}	PWM Gate Output Clamping Voltage	V_{DD} = 25 V	16.0	17.5	19.0	V
V_{OL}	PWM Gate Output Voltage Low	V_{DD} = 15 V, I_O = 100 mA	−	−	1.5	V
V_{OH}	PWM Gate Output Voltage High	V_{DD} = 15 V, I_O = 100 mA	8	−	−	V
t_R	PWM Gate Output Rising Time	C_L = 3 nF, V_{DD} = 12 V, 20~80%	−	80	110	ns
t_F	PWM Gate Output Falling Time	C_L = 3 nF, V_{DD} = 12 V, 20~80%	−	40	70	ns
Current Sense Section						
t_{PD}	Delay to Output		−	150	200	ns
V_{LIMIT}	Limit Voltage on CSPWM Pin for Over−Power Compensation	I_{DET} < 75 μA, T_A = 25°C	0.81	0.84	0.87	V
		I_{DET} = 185 μA, T_A = 25°C	0.69	0.72	0.75	
		I_{DET} = 350 μA, T_A = 25°C	0.55	0.58	0.61	
		I_{DET} = 550 μA, T_A = 25°C	0.37	0.40	0.43	
V_{SLOPE}	Slope Compensation (Note 4)	t_{ON} = 45 μs, RANGE = Open	0.25	0.30	0.35	V
		t_{ON} = 0 μs	0.05	0.10	0.15	
t_{ON-BNK}	Leading−Edge Blanking Time			300		ns
$V_{CS-FLOATING}$	CSPWM Pin Floating V_{CSPWM} Clamped High Voltage	CSPWM Pin Floating	4.5	−	5.0	V
t_{CS-H}	Delay Time, CS Pin Floating	CSPWM Pin Floating	−	150	−	μs
RT Pin Over−Temperature Protection Section						
T_{OTP}	Internal Threshold Temperature for OTP (Note 4)		125	140	155	°C
$T_{OTP-HYST}$	Hysteresis Temperature for Internal OTP (Note 4)		−	30	−	°C
I_{RT}	Internal Source Current of RT Pin		90	100	110	μA
V_{RT-AR}	Protection Triggering Voltage		0.75	0.80	0.85	V
$V_{RT-OTP-LEVEL}$	Threshold Voltage for Two−Level Debounce Time		0.45	0.50	0.55	V
$t_{RT-OTP-H}$	Debounce Time for OTP		−	10	−	ms
$t_{RT-OTP-L}$	Debounce Time for Externally Triggering	V_{RT} < $V_{RT-OTP-LEVEL}$	70	110	150	μs

Product parametric performance is indicated in the Electrical Characteristics for the listed test conditions, unless otherwise noted. Product performance may not be indicated by the Electrical Characteristics if operated under different conditions.

4. Guaranteed by design.

TYPICAL PERFORMANCE CHARACTERISTICS

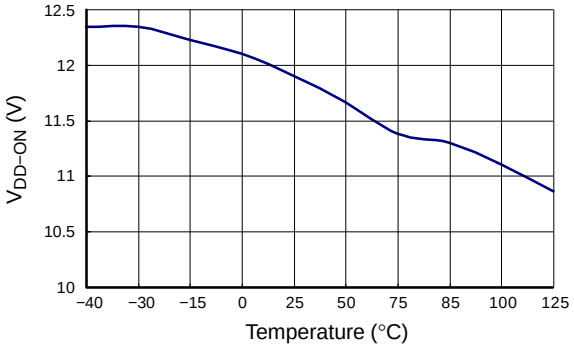

Figure 4. Turn−On Threshold Voltage

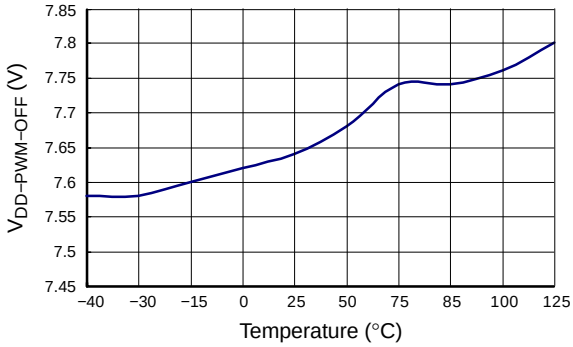

Figure 5. PWM−Off Threshold Voltage

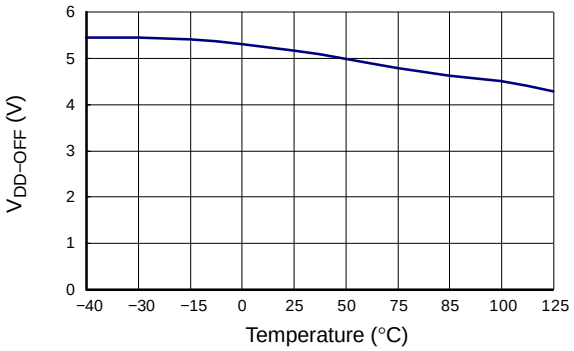

Figure 6. Turn−Off Threshold Voltage

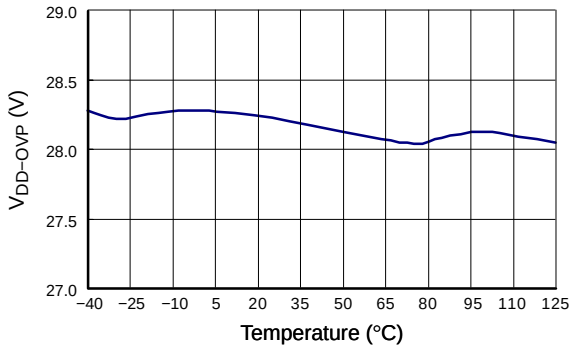

Figure 7. V_{DD} Over−Voltage Protection Threshold

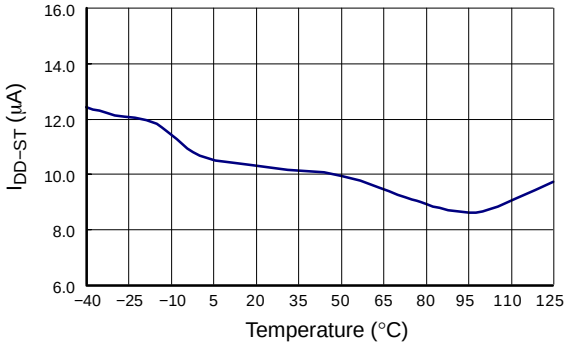

Figure 8. Startup Current

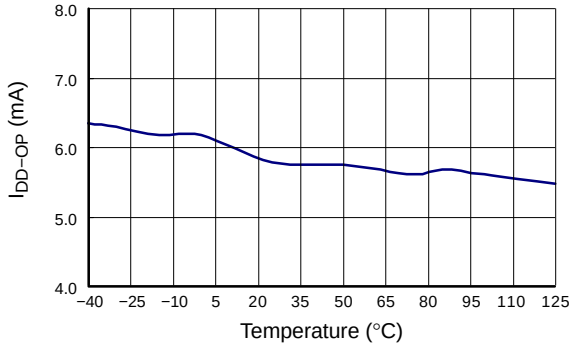

Figure 9. Operating Current

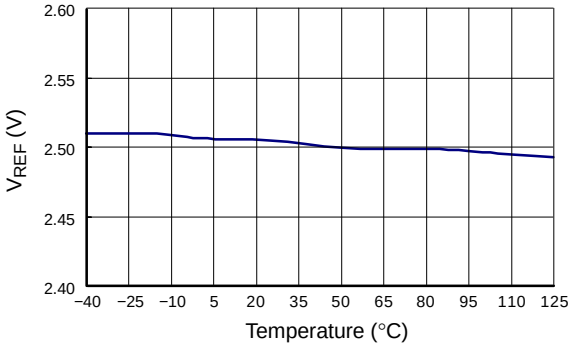

Figure 10. PFC Output Feedback Reference Voltage

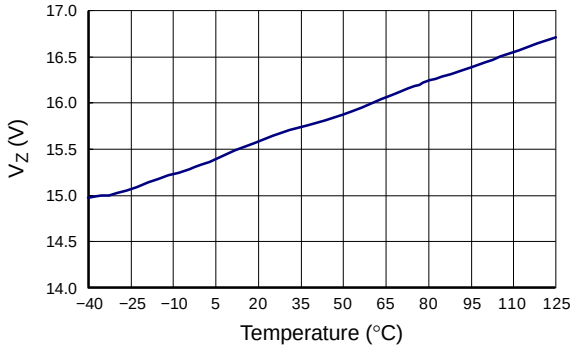

Figure 11. PFC Gate Output Clamping Voltage

TYPICAL PERFORMANCE CHARACTERISTICS (continued)

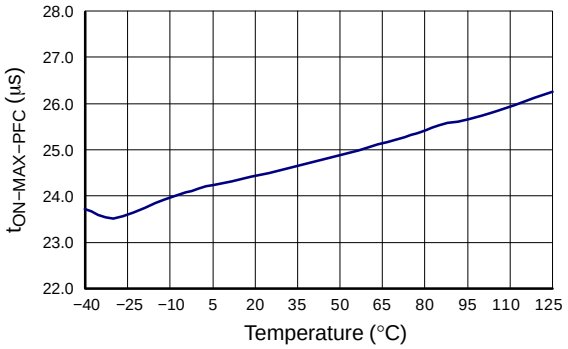

Figure 12. PFC Maximum On−Time

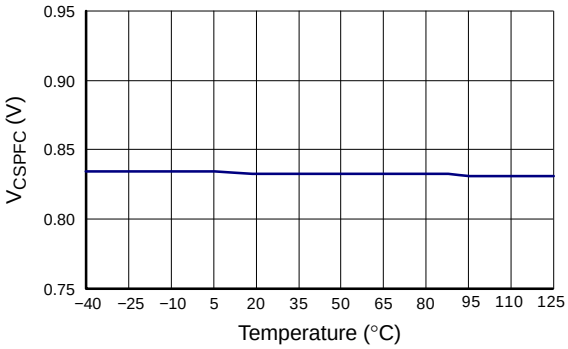

Figure 13. PFC Peak Current Limit Voltage

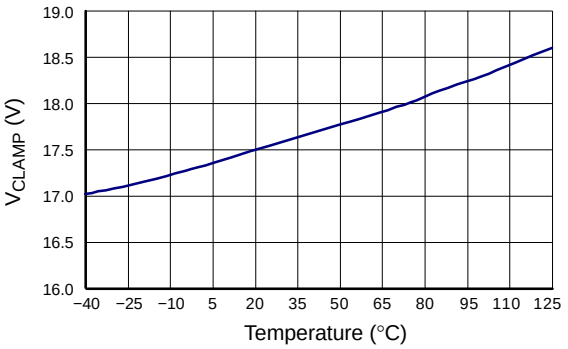

Figure 14. PWM Gate Output Clamping Voltage

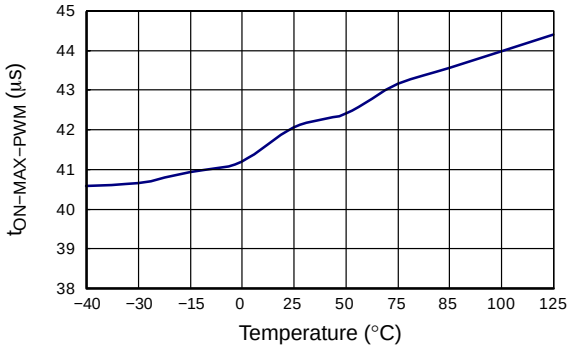

Figure 15. PWM Maximum On−Time

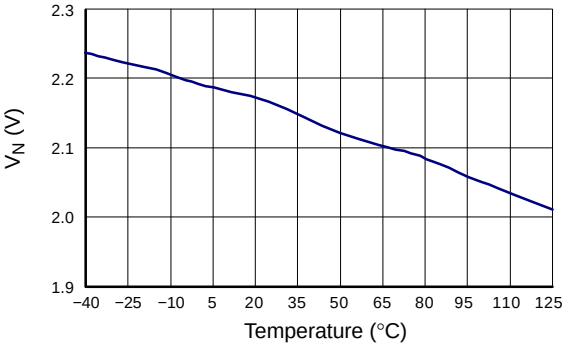

Figure 16. Beginning of Green−On Mode at V_{FB}

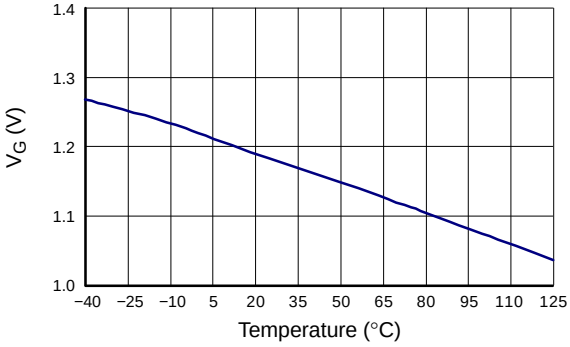

Figure 17. Beginning of Green−Off Mode at V_{FB}

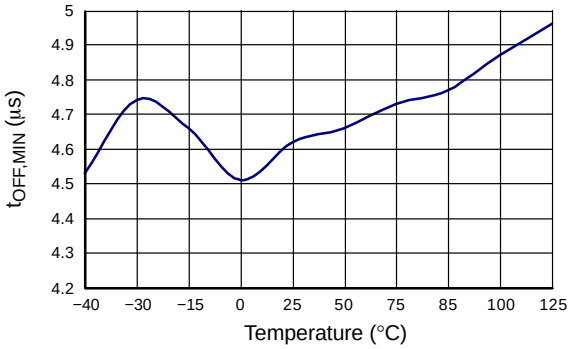

Figure 18. PWM Minimum−Off Time for $V_{FB} > V_N$

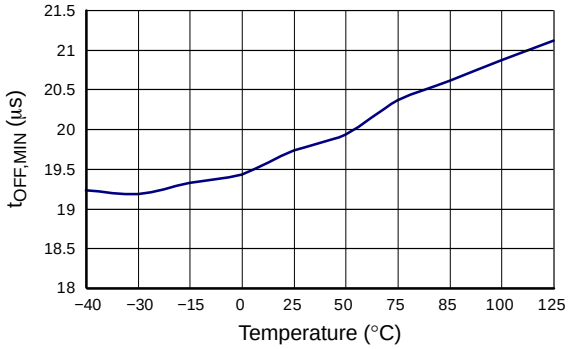

Figure 19. PWM Minimum Off−Time for $V_{FB} = V_G$

TYPICAL PERFORMANCE CHARACTERISTICS (continued)

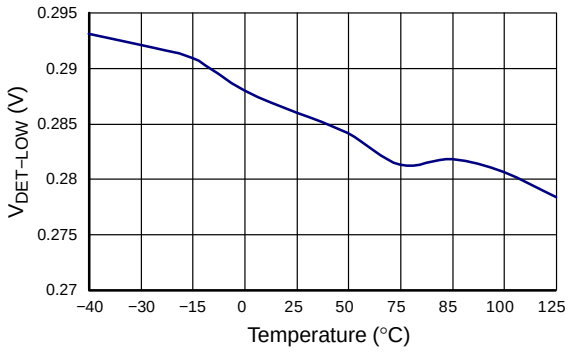

Figure 20. Lower Clamp Voltage of DET Pin

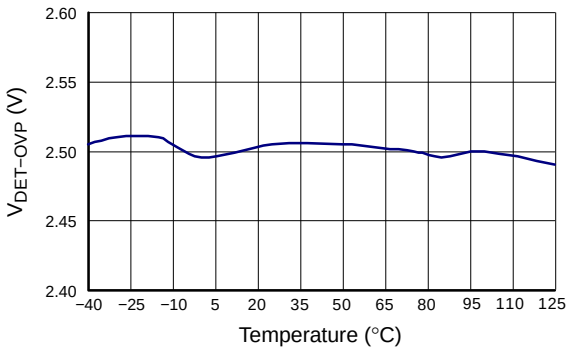

Figure 21. Reference Voltage for Output Over−Voltage Protection of DET Pin

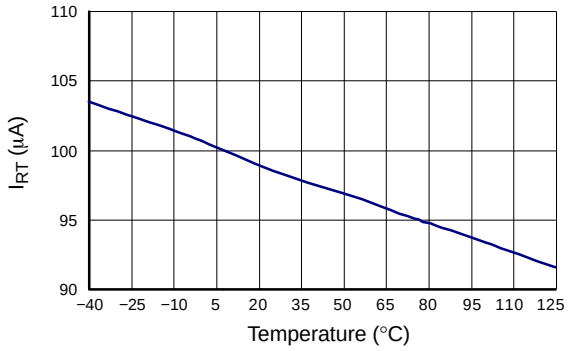

Figure 22. Internal Source Current of RT Pin

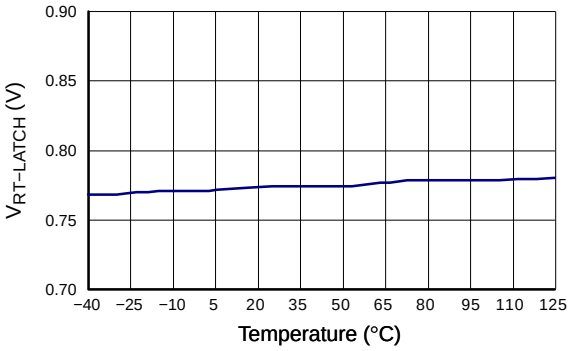

Figure 23. Over−Temperature Protection Threshold Voltage of RT Pin

FUNCTIONAL DESCRIPTION

PFC Stage

Multi−Vector Error Amplifier and THD Optimizer

For better dynamic performance, faster transient response, and precise clamping on the PFC output, FAN6920MR uses a transconductance type amplifier with proprietary innovative multi−vector error amplifier. The schematic diagram of this amplifier is shown in Figure 24. The PFC output voltage is detected from the INV pin by an external resistor divider circuit that consists of R_1 and R_2. When PFC output variation voltage reaches 6% over or under the reference voltage of 2.5 V, the multi−vector error amplifier adjusts its output sink or source current to increase the loop response to simplify the compensated circuit.

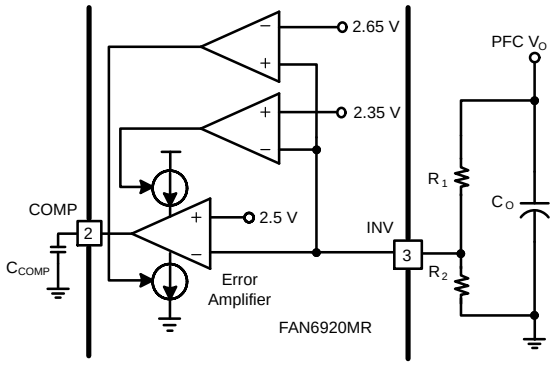

Figure 24. Multi−Vector Error Amplifier

The feedback voltage signal on the INV pin is compared with reference voltage 2.5 V, which makes the error amplifier source or sink current to charge or discharge its output capacitor C_{COMP}. The COMP voltage is compared with the internally generated sawtooth waveform to determine the on−time of PFC gate. Normally, with lower feedback loop bandwidth, the variation of the PFC gate on−time should be very small and almost constant within one input AC cycle. However, the power factor correction circuit operating at light−load condition has a defect, zero crossing distortion; which distorts input current and makes the system's Total Harmonic Distortion (THD) worse. To improve the result of THD at light−load condition, especially at high input voltage, an innovative THD optimizer is inserted by sampling the voltage across the current−sense resistor. This sampling voltage on current−sense resistor is added into the sawtooth waveform to modulate the on−time of PFC gate, so it is not constant on−time within a half AC cycle. The method of operation block between THD optimizer and PWM is shown in Figure 25. After THD optimizer processes, around the valley of AC input voltage, the compensated on−time becomes wider than the original. The PFC on−time, which is around the peak voltage, is narrowed by the THD optimizer. The timing sequences of the PFC MOS and the shape of the inductor current are shown in Figure 26. Figure 27 shows the difference between calculated fixed on−time mechanism and fixed on−time with THD optimizer during a half AC cycle.

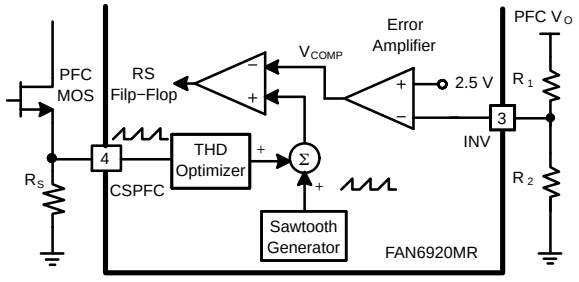

Figure 25. Multi−Vector Error Amplifier with THD Optimizer

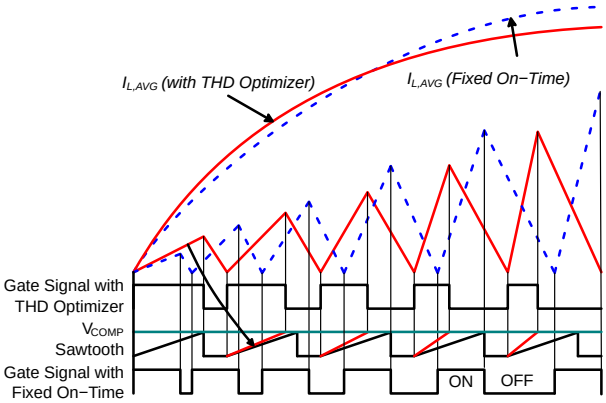

Figure 26. Operation Waveforms of Fixed On−Time with and without THD Optimizer

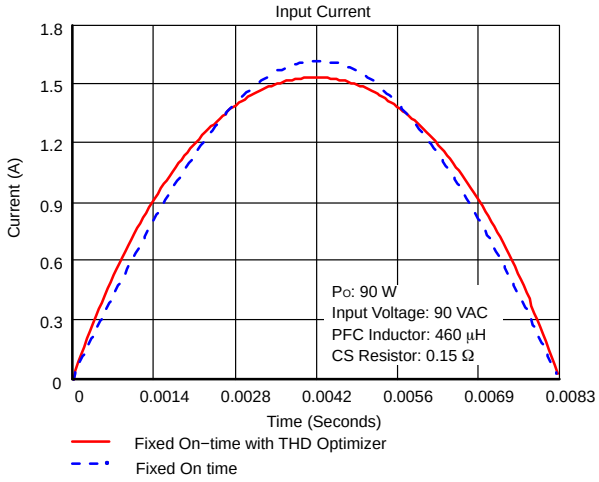

Figure 27. Calculated Waveforms of Fixed On−Time with and without THD Optimizer During a Half AC Cycle

RANGE Pin

A built−in low−voltage MOSFET can be turned on or off according to V_{VIN} voltage level and PFC status. The drain pin of this internal MOSFET is connected to the RANGE pin. Figure 28 shows the status curve of V_{VIN} voltage level and RANGE impedance (open or ground).

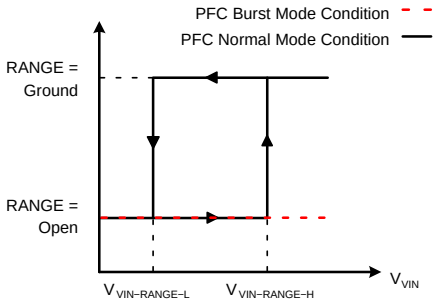

Figure 28. Hysteresis Behavior between RANGE Pin and VIN Pin Voltage

Zero−Current Detection (ZCD Pin)

Figure 29 shows the internal block of zero−current detection. The detection function is performed by sensing the information on an auxiliary winding of the PFC inductor. Referring to Figure 30, when PFC MOS is off, the stored energy of the PFC inductor starts to release to the output load. Then the drain voltage of PFC MOS starts to decrease since the PFC inductor resonates with parasitic capacitance. Once the ZCD pin voltage is lower than the triggering voltage (1.75 V typical), the PFC gate signal is sent again to start a new switching cycle.

If PFC operation needs to be shut down due to abnormal condition, pull the ZCD pin LOW, voltage under 0.2 V (typical), to activate the PFC disable function to stop PFC switching operation.

For preventing excessive high switching frequency at light load, a built−in inhibit timer is used to limit the minimum t_{OFF} time. Even if the ZCD signal has been detected, the PFC gate signal is not sent during the inhibit time (2.5 μs typical).

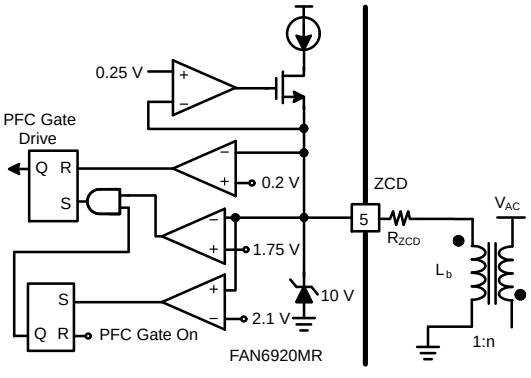

Figure 29. Internal Block of the Zero−Current Detection

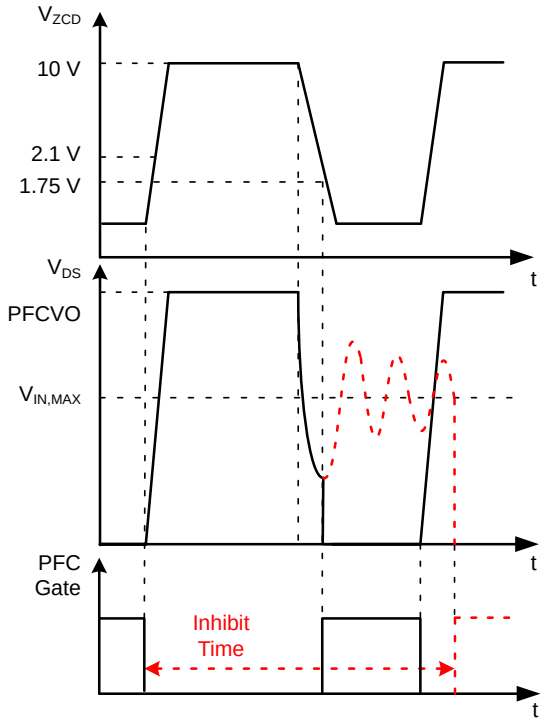

Figure 30. Operation Waveforms of PFC Zero−Current Detection

Protection for PFC Stage

PFC Output Voltage UVP and OVP (INV Pin)

FAN6920MR provides several kinds of protection for PFC stage. PFC output over− and under−voltage are essential for PFC stage. Both are detected and determined by INV pin voltage, as shown in Figure 31. When INV pin voltage is over 2.75 V or under 0.45 V, due to overshoot or abnormal conditions, and lasts for a de−bounce time around 70 μs; the OVP or UVP circuit is activated to stop PFC switching operation immediately.

The INV pin is not only used to receive and regulate PFC output voltage; it can also perform PFC output OVP/ UVP protection. For failure−mode test, this pin can shut down PFC switching if pin floating occurs.

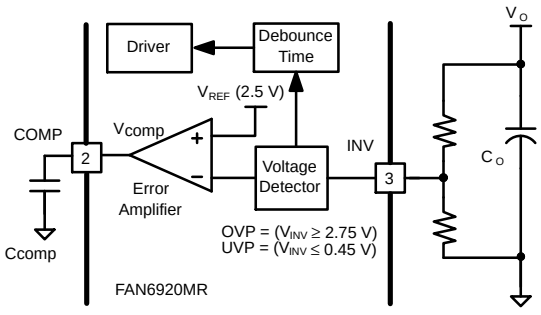

Figure 31. Internal Block of PFC Over− and Under−Voltage Protection

PFC Peak Current Limiting (CSPFC Pin)

During PFC stage switching operation, the PFC switch current is detected by the current−sense resistor on the CSPFC pin and the detected voltage on this resistor is delivered to the input terminal of a comparator and compared with a threshold voltage 0.82 V (typical). Once the CSPFC pin voltage is higher than the threshold voltage, the PFC gate is turned off immediately.

The PFC peak switching current is adjustable by the current−sense resistor. Figure 32 shows the measured waveform of PFC gate and CSPFC pin voltage.

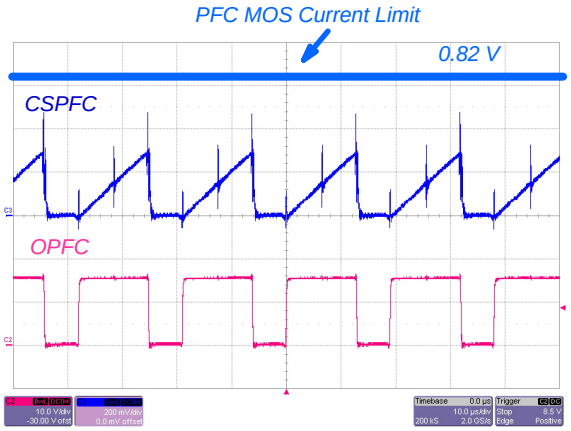

Figure 32. Cycle−by−Cycle Current Limiting

Brownout Protection (VIN Pin)

With AC voltage detection, FAN6920MR can perform brownout / in protection (AC voltage UVP). Figure 33 shows the key operation waveforms of brownout / in protection. Both use the VIN pin to detect AC input voltage level and the VIN pin is connected to AC input by a resistor divider *(refer to Figure 1)*; therefore, the V_{VIN} voltage is proportional to the AC input voltage. When the AC voltage drops and V_{VIN} voltage is lower than 1 V for 100 ms, the UVP protection is activated and the COMP pin voltage is clamped to around 1.6 V. Because PFC gate duty is determined by comparing the sawtooth waveform and COMP pin voltage, lower COMP voltage results in narrow PFC on−time, so that the energy converged is limited and the PFC output voltage decreases. When INV pin voltage is lower than 1.2 V, FAN6920MR stops all PFC and PWM switching operation immediately until V_{DD} voltage drops to turn−off voltage then rises to turn−on voltage again (UVLO).

When the brownout protection is activated, all switching operation is turned off and V_{DD} voltage enters Hiccup Mode up and down continuously. Once V_{VIN} voltage is higher than 1.3 V (typical) and V_{DD} reaches turn−on voltage again, the PWM and PFC gate is sent.

The measured waveforms of brownout / in protection are shown in Figure 34.

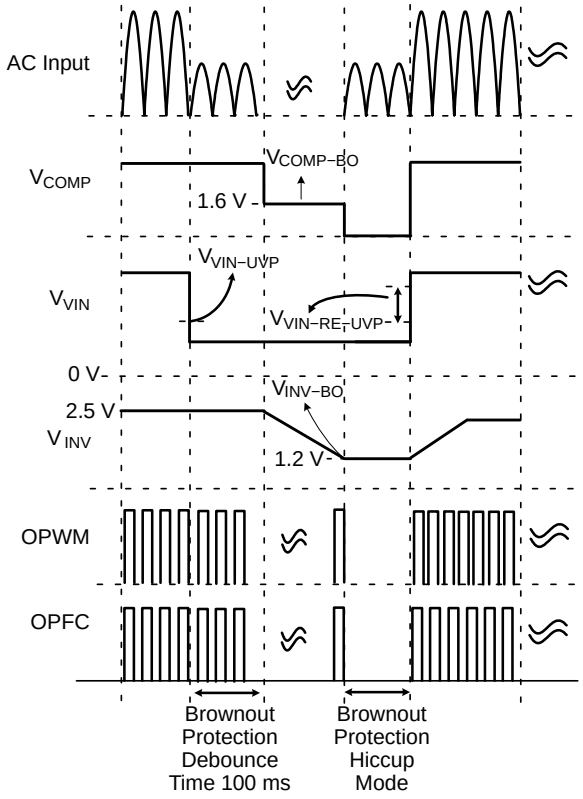

Figure 33. Operation Waveforms of Brownout / In Protection

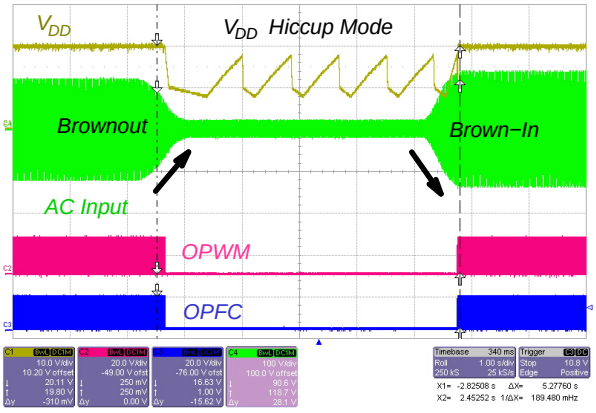

Figure 34. Measured Waveform of Brownout / In Protection (Adapter Application)

PFC Burst Mode

To minimize the power dissipation at light−load condition, the FAN6920MR PFC control enters burst−mode operation. As the load decreases, the PWM feedback voltage (V_{FB}) decreases. When $V_{FB} < V_{CTRLPFC-BM}$ for 100 ms, the device enters PFC burst mode, the V_{COMP} pulls high to V_{COMP-H}, and PFC output voltage increases. When the PFC feedback voltage on INV pin (V_{INV}) triggers the OVP threshold voltage ($V_{INV-OVP}$), V_{COMP} pulls low to V_{COMP-L}, the OPFC pin switching stops and the PFC output voltages start to drop. Once the V_{INV} drops below the feedback comparator reference voltage (V_{REF}), V_{COMP} pulls high to V_{COMP-H} and OPFC starts switching again. Burst−mode operation alternately enables and disables switching of the power MOSFET to reduce the switching loss at light−load condition.

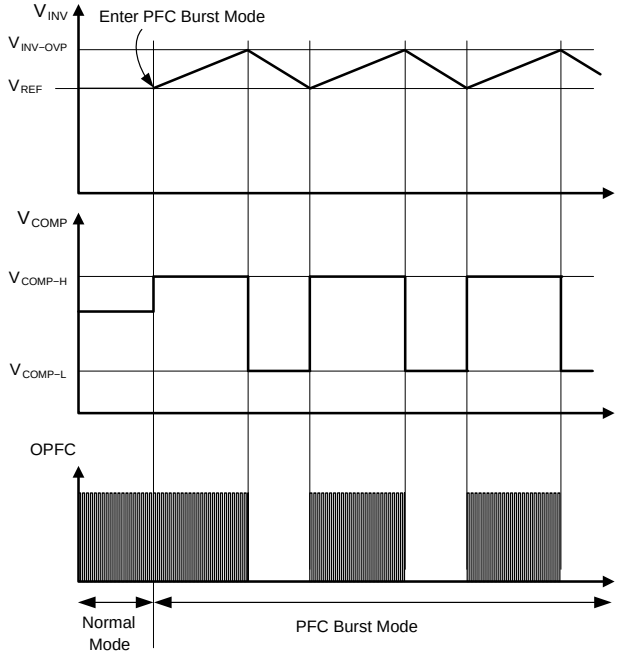

Figure 35. PFC Burst Mode Behavior

The V_{COMP-H} is adjusted by the VIN pin voltage, as shown in Figure 36. Since the VIN pin is connected to rectified AC input line voltage through the resistive divider, a higher line voltage generates a higher VIN pin voltage. The V_{COMP-H} decreases as VIN pin voltage increases, limiting the PFC choke current at a higher input voltage to reduce acoustic noise. If the V_{COMP-H} is below the PFC V_{OZ}, the PFC automatically shuts down at light load with high line voltage input condition.

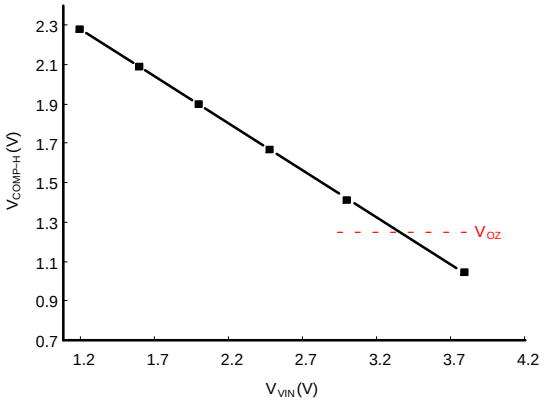

Figure 36. V_{COMP-H} Voltage vs. V_{VIN} Voltage Characteristic Curve

PWM Stage

HV Startup and Operating Current (HV Pin)

The HV pin is connected to the AC line through a resistor *(refer to Figure 1)*. With a built−in high−voltage startup circuit, when AC voltage is applied to the power system, FAN6920MR provides a high current to charge the external V_{DD} capacitor to speed up controller's startup time and build up normal rated output voltage within three seconds. To save power consumption, after V_{DD} voltage exceeds turn−on voltage and enters normal operation; this high−voltage startup circuit is shut down to avoid power loss from startup resistor.

Figure 37 shows the characteristic curve of V_{DD} voltage and operating current I_{DD}. When V_{DD} voltage is lower than $V_{DD-PWM-OFF}$, FAN6920MR stops all switching operation and turns off unnecessary internal circuits to reduce operating current. By doing so, the period from $V_{DD-PWM-OFF}$ to V_{DD-OFF} can be extended and the hiccup mode frequency can be decreased to reduce the input power in case of output short circuit. Figure 38 shows the typical waveforms of V_{DD} voltage and gate signal with hiccup mode operation.

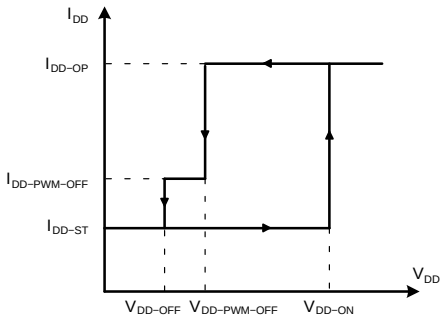

Figure 37. V_{DD} vs. I_{DD-OP} Characteristic Curve

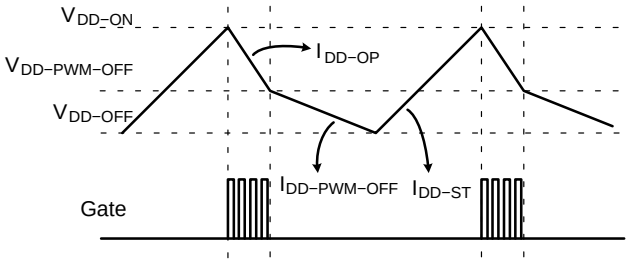

Figure 38. Typical Waveform of V_{DD} Voltage and Gate Signal at Hiccup Mode Operation

Green−Mode Operation and PFC−ON / OFF Control (FB Pin)

Green mode further reduces power loss in the system (e.g. switching loss). Through off−time modulation to regulate switching frequency according to FB pin voltage. When output loading decreases, FB voltage lowers due to secondary feedback movement and the $t_{OFF-MIN}$ is extended. After $t_{OFF-MIN}$ (determined by FB voltage), the internal valley−detection circuit is activated to detect the valley on the drain voltage of the PWM switch. When the valley signal is detected, FAN6920MR outputs a PWM gate signal to turn on the switch and begin a new switching cycle.

With green mode operation and valley detection, at light−load condition; the power system can perform extended valley switching a DCM operation and can further reduce switching loss for better conversion efficiency. The FB pin voltage versus $t_{OFF-MIN}$ time characteristic curve is shown in Figure 39. As Figure 39 shows, FAN6920MR can narrow down to 2.25 ms t_{OFF} time, which is around 440 Hz switching frequency.

Referring to Figure 1 and Figure 2, FB pin voltage is not only used to receive secondary feedback signal to determine gate on−time, but also determines PFC stage operating mode.

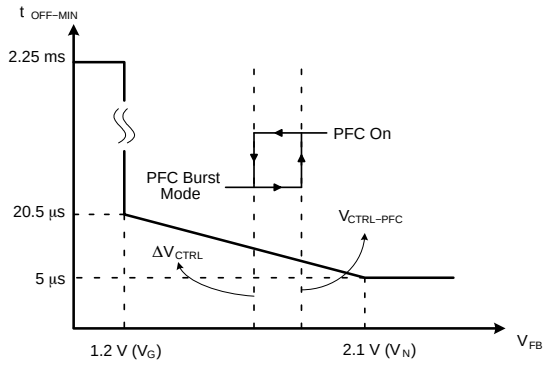

Figure 39. V_{FB} Voltage vs. $t_{OFF-MIN}$ Time Characteristic Curve

Valley Detection (DET Pin)

When FAN6920MR operates in Green Mode, $t_{OFF-MIN}$ is determined by the Green Mode circuit, according to the FB pin voltage level. After $t_{OFF-MIN}$, the internal valley−detection circuit is activated. During t_{OFF} of the PWM switch, when transformer inductor current discharges to zero, the transformer inductor and parasitic capacitor of PWM switch start to resonate concurrently. When the drain voltage on the PWM switch falls, the voltage across on auxiliary winding V_{AUX} also decreases since the auxiliary winding is coupled to the primary winding. Once the V_{AUX} voltage resonates and falls to negative, V_{DET} voltage is clamped by the DET pin (*refer to Figure 40*) and FAN6920MR is forced to flow out a current I_{DET}. FAN6920MR reflects and compares this I_{DET} current. If this source current rises to a threshold current, the PWM gate signal is sent out after a fixed delay time (200 ns typical).

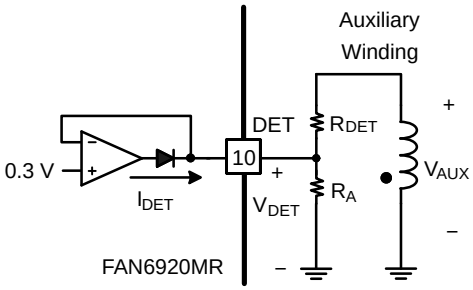

Figure 40. Valley Detection

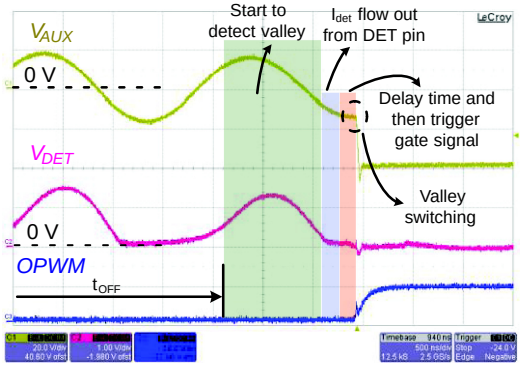

Figure 41. Measured Waveform of Valley Detection

High / Low Line Over−Power Compensation (DET Pin)

Generally, when the power switch turns off, there is a delay from gate signal falling edge to power switch off. This delay is produced by an internal propagation delay of the controller and the turn−off delay of the PWM switch due to gate resistor and gate−source capacitor C_{ISS}. At different AC input voltages, this delay produces different maximum output power with the same PWM current limit level. Higher input voltage generates higher maximum output power because applied voltage on primary winding is higher and causes higher rising slope inductor current. It results in higher peak inductor current at the same delay. Furthermore, under the same output wattage, the peak switching current at high line is lower than that at low line. Therefore, to make the maximum output power close at different input voltages, the controller needs to regulate V_{LIMIT} voltage of the CSPWM pin to control the PWM switch current.

Referring to Figure 42, during t_{ON} of the PWM switch, the input voltage is applied to primary winding and the voltage

across on auxiliary winding V_{AUX} is proportional to primary winding voltage. As the input voltage increases, the reflected voltage on auxiliary winding V_{AUX} becomes higher as well. FAN6920MR also clamps the DET pin voltage and flows out current I_{DET}. Since the current I_{DET} is in accordance with V_{AUX} voltage, FAN6920MR depends on this current during t_{ON} to regulate the current limit level of the PWM switch to perform high / low line over−power compensation.

As the input voltage increases, the reflected voltage on the auxiliary winding V_{AUX} becomes higher as well as the current I_{DET} and the controller regulates the V_{LIMIT} to a lower level.

The R_{DET} resistor is connected from auxiliary winding to the DET pin. Engineers can adjust this R_{DET} resistor to get proper V_{LIMIT} voltage to fit the specification of overpower or over−current protection. The characteristic curve of I_{DET} current vs. V_{LIMIT} voltage on CSPWM pin is shown in Figure 43.

$$I_{DET} = \left[V_{IN} \times \left(N_A / N_P\right)\right] / R_{DET} \qquad \text{(eq. 1)}$$

where V_{IN} is input voltage; N_A is turn number of auxiliary winding; and N_P is turn number of primary winding.

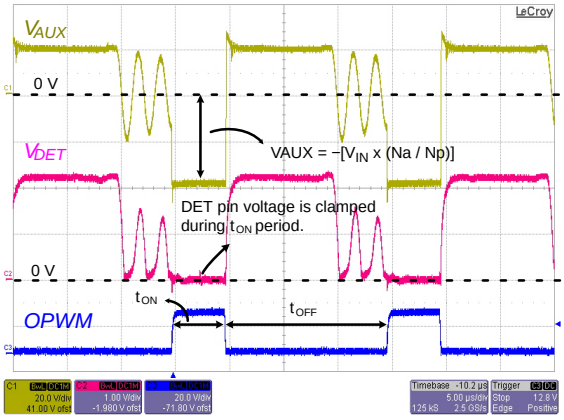

Figure 42. Relationship between V_{AUX} and V_{IN}

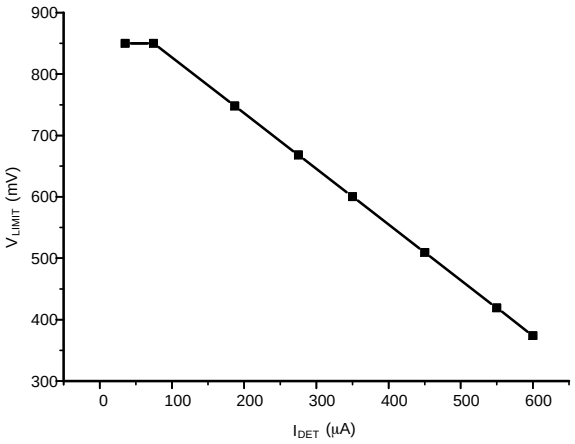

Figure 43. I_{DET} Current vs. V_{LIMIT} Voltage Characteristic Curve

Leading−Edge Blanking (LEB)

When the PFC or PWM switches are turned on, a voltage spike is induced on the current−sense resistor due to the reciprocal effect by reverse−recovery energy of the output diode and C_{OSS} of power MOSFET. To prevent this spike, a leading−edge blanking time is built−in and a small RC filter (e.g. 100 Ω, 470 pF) is recommended between the CSPWM pin and GND.

Protection for PWM Stage

VDD Pin Over−Voltage Protection (OVP)

V_{DD} over−voltage protection prevents device damage once V_{DD} voltage is higher than device stress rating voltage. In the case of V_{DD} OVP, the controller stops all switching operation immediately and enters auto−recovery protection.

Adjustable Over−Temperature Protection and Externally Protection Triggering (RT Pin)

Figure 44 is a typical application circuit with an internal block of RT pin. As shown, a constant current I_{RT} flows out from the RT pin, so the voltage V_{RT} on the RT pin can be obtained as I_{RT} current multiplied by the resistor, which consists of NTC resistor and R_A resistor. If the RT pin voltage is lower than 0.8 V and lasts for a debounce time, auto−recovery protection is activated and stops all PFC and PWM switching.

RT pin is usually used to achieve over−temperature protection with a NTC resistor and provide external protection triggering for additional protection. Engineers can use an external triggering circuit (e.g. transistor) to pull the RT pin low and activate controller auto−recovery protection.

Generally, the external protection triggering needs to activate rapidly since it is usually used to protect the power system from abnormal conditions. Therefore, the protection debounce time of the RT pin is set to around 110 μs once the RT pin voltage is lower than 0.5 V.

For over−temperature protection, because the temperature does not change immediately; the RT pin voltage is reduced slowly as well. The debounce time for adjustable OTP should not need a fast reaction. To prevent improper protection triggering on the RT pin due to exacting test condition (e.g. lightning test); when the RT pin triggering voltage is higher than 0.5 V, the protection debounce time is set to around 10 ms. To avoid improper triggering on the RT pin, add a small value capacitor (e.g. 1000 pF) paralleled with NTC and the R_A resistor.

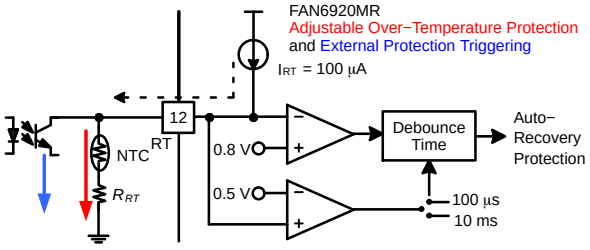

Figure 44. Adjustable Over−Temperature Protection

Output Over−Voltage Protection (DET Pin)

Referring to Figure 45, during the discharge time of PWM transformer inductor; the voltage across on auxiliary winding is reflected from secondary winding and therefore the flat voltage on the DET pin is proportional to the output voltage. FAN6920MR can sample this flat voltage level after a t_{OFF} blanking time to perform output over−voltage protection. This t_{OFF} blanking time is used to ignore the voltage ringing from leakage inductance of PWM transformer. The sampling flat voltage level is compared with internal threshold voltage 2.5 V and, once the protection is activated, FAN6920MR enters auto−recovery protection.

The controller can protect rapidly by this kind of cycle−by−cycle sampling method in the case of output over voltage. The protection voltage level can be determined by the ratio of external resistor divider R_A and R_{DET}. The flat voltage on DET pin can be expressed by the following equation:

$$V_{DET} = \left(N_A / N_S\right) \times V_O \times \frac{R_A}{R_{DET} + R_A} \quad \text{(eq. 2)}$$

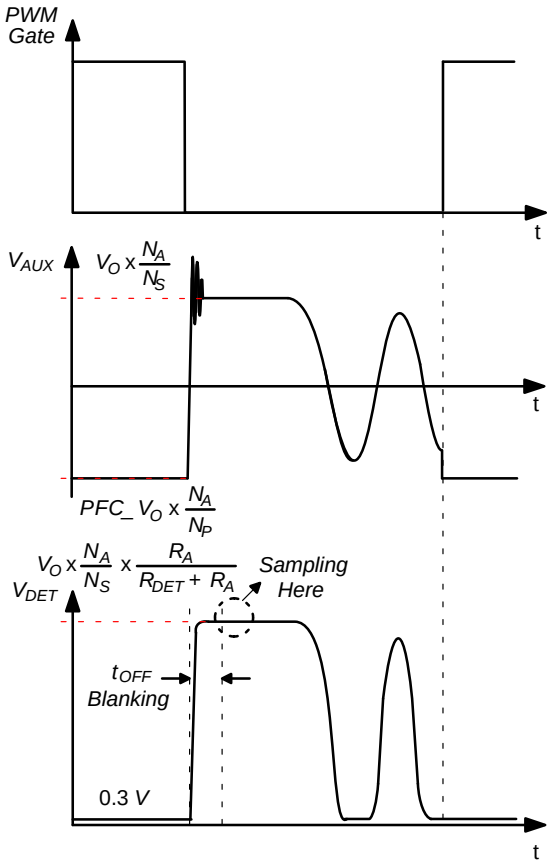

Figure 45. Operation Waveform of Output Over−Voltage Detection

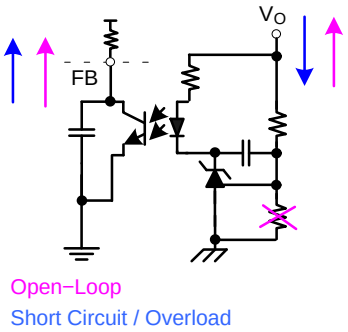

Figure 46. FB Pin Open−Loop, Short Circuit, and Overload Protection

Referring to Figure 46; outside of FAN6920MR, the FB pin is connected to the collector of transistor of an opto−coupler. Inside, the FB pin is connected to an internal voltage bias through a resistor of around 5 kΩ.

As the output loading is increased, the output voltage is decreased and the sink current of the transistor of the opto−coupler on primary side is reduced. The FB pin voltage is increased by internal voltage bias. In the case of an open loop, output short−circuit, or overload condition; this sink current is further reduced and the FB pin voltage is pulled HIGH by internal bias voltage. When the FB pin voltage is higher than 4.2 V for 50 ms, the FB pin protection is activated.

Under−Voltage Lockout (UVLO, VDD Pin)

Referring to Figure 37 and Figure 38, the turn−on and turn−off V_{DD} threshold voltages are fixed at 18 V and 10 V, respectively. During startup, the hold−up capacitor (V_{DD} capacitor) is charged by HV startup current until V_{DD} voltage reaches the turn−on voltage. Before the output voltage rises to rated voltage and delivers energy to the V_{DD} capacitor from auxiliary winding, this hold−up capacitor must sustain the V_{DD} voltage energy for operation. When V_{DD} voltage reaches turn−on voltage, FAN6920MR starts all switching operation if no protection is triggered before V_{DD} voltage drops to turn−off voltage $V_{DD-PWM-OFF}$.

ORDERING INFORMATION

Part Number	OLP Mode	Operating Temperature Range	Package	Shipping†
FAN6920MRMY	Recovery	−40°C to +105°C	16−Pin Small Outline Package (SOP)	2500 / Tape & Reel

†For information on tape and reel specifications, including part orientation and tape sizes, please refer to our Tape and Reel Packaging Specifications Brochure, BRD8011/D.

SOIC−16, 150 mils
CASE 751BG
ISSUE O

DATE 19 DEC 2008

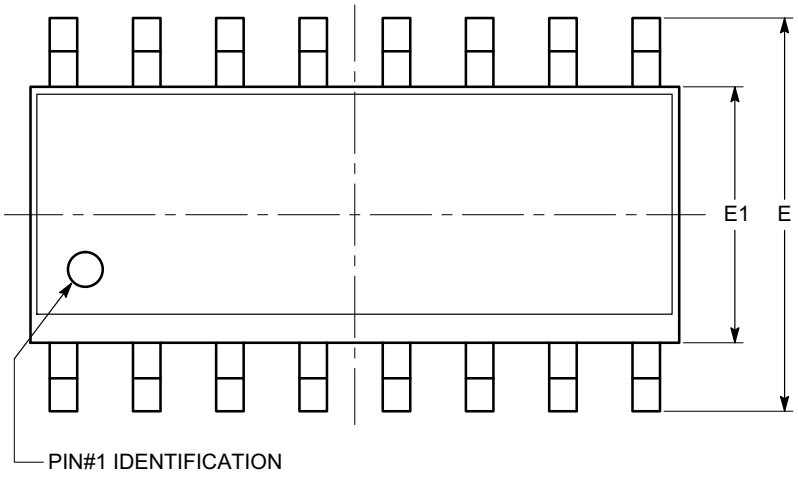

TOP VIEW

SYMBOL	MIN	NOM	MAX
A	1.35		1.75
A1	0.10		0.25
b	0.33		0.51
c	0.19		0.25
D	9.80	9.90	10.00
E	5.80	6.00	6.20
E1	3.80	3.90	4.00
e	1.27 BSC		
h	0.25		0.50
L	0.40		1.27
θ	0º		8º

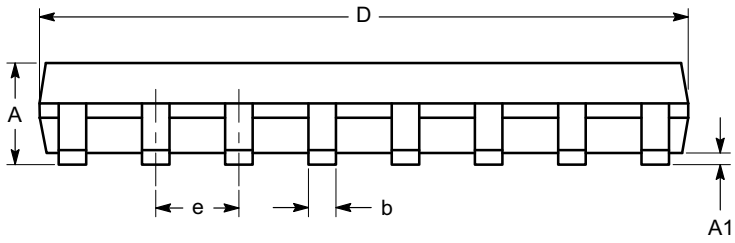

SIDE VIEW

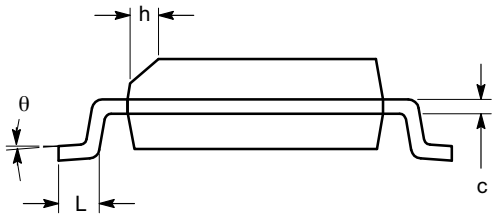

END VIEW

Notes:
(1) All dimensions are in millimeters. Angles in degrees.
(2) Complies with JEDEC MS-012.

DOCUMENT NUMBER:	**98AON34275E**	Electronic versions are uncontrolled except when accessed directly from the Document Repository. Printed versions are uncontrolled except when stamped "CONTROLLED COPY" in red.	
DESCRIPTION:	**SOIC−16, 150 mils**		**PAGE 1 OF 1**

onsemi and onsemi are trademarks of Semiconductor Components Industries, LLC dba **onsemi** or its subsidiaries in the United States and/or other countries. **onsemi** reserves the right to make changes without further notice to any products herein. **onsemi** makes no warranty, representation or guarantee regarding the suitability of its products for any particular purpose, nor does **onsemi** assume any liability arising out of the application or use of any product or circuit, and specifically disclaims any and all liability, including without limitation special, consequential or incidental damages. **onsemi** does not convey any license under its patent rights nor the rights of others.

onsemi, , and other names, marks, and brands are registered and/or common law trademarks of Semiconductor Components Industries, LLC dba "**onsemi**" or its affiliates and/or subsidiaries in the United States and/or other countries. **onsemi** owns the rights to a number of patents, trademarks, copyrights, trade secrets, and other intellectual property. A listing of **onsemi**'s product/patent coverage may be accessed at www.onsemi.com/site/pdf/Patent−Marking.pdf. **onsemi** reserves the right to make changes at any time to any products or information herein, without notice. The information herein is provided "as−is" and **onsemi** makes no warranty, representation or guarantee regarding the accuracy of the information, product features, availability, functionality, or suitability of its products for any particular purpose, nor does **onsemi** assume any liability arising out of the application or use of any product or circuit, and specifically disclaims any and all liability, including without limitation special, consequential or incidental damages. Buyer is responsible for its products and applications using **onsemi** products, including compliance with all laws, regulations and safety requirements or standards, regardless of any support or applications information provided by **onsemi**. "Typical" parameters which may be provided in **onsemi** data sheets and/or specifications can and do vary in different applications and actual performance may vary over time. All operating parameters, including "Typicals" must be validated for each customer application by customer's technical experts. **onsemi** does not convey any license under any of its intellectual property rights nor the rights of others. **onsemi** products are not designed, intended, or authorized for use as a critical component in life support systems or any FDA Class 3 medical devices or medical devices with a same or similar classification in a foreign jurisdiction or any devices intended for implantation in the human body. Should Buyer purchase or use **onsemi** products for any such unintended or unauthorized application, Buyer shall indemnify and hold **onsemi** and its officers, employees, subsidiaries, affiliates, and distributors harmless against all claims, costs, damages, and expenses, and reasonable attorney fees arising out of, directly or indirectly, any claim of personal injury or death associated with such unintended or unauthorized use, even if such claim alleges that **onsemi** was negligent regarding the design or manufacture of the part. **onsemi** is an Equal Opportunity/Affirmative Action Employer. This literature is subject to all applicable copyright laws and is not for resale in any manner.

ADDITIONAL INFORMATION

TECHNICAL PUBLICATIONS:
Technical Library: www.onsemi.com/design/resources/technical−documentation
onsemi Website: www.onsemi.com

ONLINE SUPPORT: www.onsemi.com/support
For additional information, please contact your local Sales Representative at www.onsemi.com/support/sales