Click here to ask an associate for production status of specific part numbers.

20Mbps Full-Duplex RS-485/RS-422 Transceivers with ±40kV ESD Protection

MAX33047E-49E

General Description

The MAX33047E-49E are a full-duplex RS-485/422 transceiver family that operates at either 3.3V or 5V supply rails for ease of design. These devices provide enhanced protection for the applications used in harsh electrical environments. All driver outputs and receiver inputs are protected with both high fault protection and high electrostatic discharge (ESD) protection.

The A/B data lines have fault protection up to ±25V for accidental shorts with local power supplies and ±40kV ESD human body model (HBM) protection. They are also rated up to ±15kV Air-Gap Discharge and ±10kV Contact Discharge as per IEC 610004-2. Both features ensure robust protection in harsh industrial environments. The drivers are short-circuit limited and protected against excessive power dissipation by the thermal-shutdown circuitry that places the driver outputs into a high-impedance state. The receiver input has a true fail-safe feature that guarantees a logic-high output if both the inputs are open or short-circuited.

These devices are encased in an 8-pin and 14-pin small outline integrated circuit (SOIC) package with an operating temperature from -40°C to +125°C.

Applications

- Programmable Logic Controller (PLC)
- Factory Automation Equipment
- Industrial

Benefits and Features

- Integrated Protection Increase Robustness
  - ±25V Fault Protection Range on Driver Outputs/Receiver Inputs
  - High ESD Protection
    - ±40kV HBM ESD as per JEDEC JS-001
    - ±15kV Air Gap ESD as per IEC 61000-4-2
    - ±10kV Contact ESD as per IEC 61000-4-2
  - Short-Circuit Protected Outputs
  - True Fail-Safe Receiver Prevents False Transition on Receiver Input Short or Open Events
  - Hot-Swap Capability Eliminates False Transitions During Power-Up or Hot Insertion
- High-Speed Data Rates up to 20Mbps
- Wide -40°C to +125°C Operating Temperature
- Enables Up to 256 Nodes on the Bus

***Ordering Information* appears at end of data sheet.**

Simplified Block Diagram

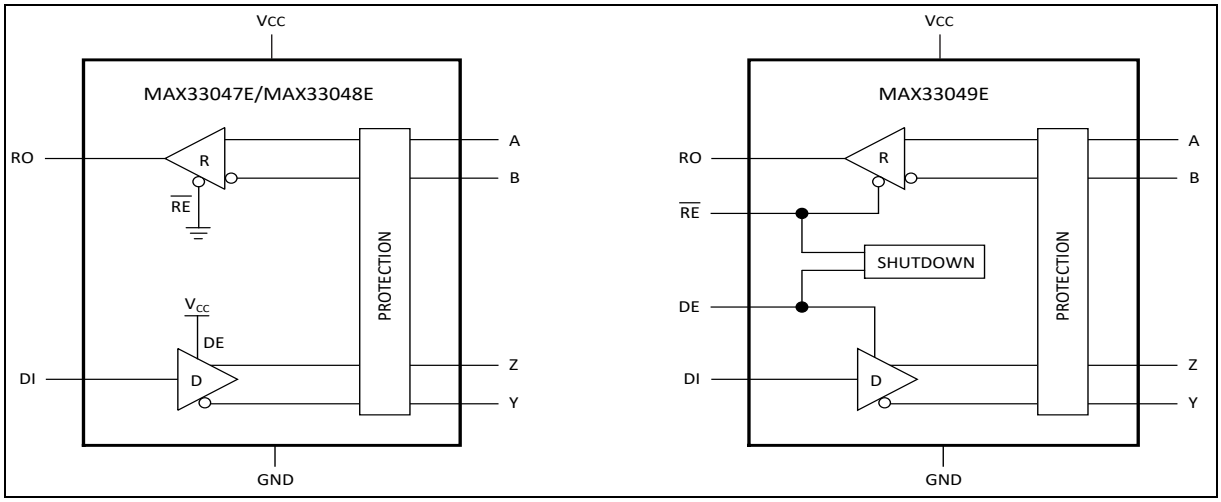

19-101567; Rev 0; 7/22

© 2022 Analog Devices, Inc. All rights reserved. Trademarks and registered trademarks are the property of their respective owners.
One Analog Way, Wilmington, MA 01887 U.S.A. | Tel: 781.329.4700 | © 2021 Analog Devices, Inc. All rights reserved.

Absolute Maximum Ratings

V_{CC} ..... -0.3V to +6V

RO .....-0.3V to VCC+0.3V

DE, DI, RE bar ..... -0.3V to +6V

A, B, Y, Z ..... -30V to +30V

Short-Circuit Duration (RO, A, B) .....Continuous

Operating Temperature Range..... -40°C to +125°C

Junction Temperature.....+150°C

Storage Temperature..... -65°C to +150°C

Stresses beyond those listed under "Absolute Maximum Ratings" may cause permanent damage to the device. These are stress ratings only, and functional operation of the device at these or any other conditions beyond those indicated in the operational sections of the specifications is not implied. Exposure to absolute maximum rating conditions for extended periods may affect device reliability.

Package Information

Package Code	S8+2C
Outline Number	21-0041
Land Pattern Number	90-0096
Thermal Resistance, Four Layer Board:	
Junction-to-Ambient (θ_{JA})	136°C/W
Junction-to-Case Thermal Resistance (θ_{JC})	38°C/W

Package Code	S14+1C
Outline Number	21-0041
Land Pattern Number	90-0112
Thermal Resistance, Four Layer Board:	
Junction-to-Ambient (θ_{JA})	84°C/W
Junction-to-Case Thermal Resistance (θ_{JC})	34°C/W

For the latest package outline information and land patterns (footprints), go to ***www.maximintegrated.com/packages***. Note that a "+", "#", or "-" in the package code indicates RoHS status only. Package drawings may show a different suffix character, but the drawing pertains to the package regardless of RoHS status.

Package thermal resistances were obtained using the method described in JEDEC specification JESD51-7, using a four-layer board. For detailed information on package thermal considerations, refer to ***www.maximintegrated.com/thermal-tutorial***.

Electrical Characteristics

(V_{CC} = 3.0V to 3.6V and V_{CC} = 4.5V to 5.5V, T_A = T_{MIN} to T_{MAX}, unless otherwise specified. Typical values are at V_{CC} = +5V and TA = +25°C. (Note 1))

PARAMETER	SYMBOL	CONDITIONS		MIN	TYP	MAX	UNITS
POWER							
Supply Voltage	V_{CC}			3		3.6	V
				4.5		5.5	
Supply Current	I_{CC}	DE = V_{CC}, /RE\ = 0, no load, no switching (DI = 0 or V_{CC})			6		mA
		DE = 0V, /RE\ = 0V			3		
Shutdown Supply Current	I_{SHDN}	DE = 0, /RE\ = V_{CC}			5		µA
DRIVER							
Differential Driver Output	$\|V_{OD}\|$	R_L = 54Ω	(Note 2)	1.5			V
		R_L = 60Ω	(Note 2)	1.5			
		R_L = 100Ω	(Note 2)	2			
Change in Magnitude of Differential Driver Output Voltage	ΔV_{OD}	R_L = 54Ω or 60Ω or 100Ω		-0.2		+0.2	V
Driver Common-Mode Output Voltage	V_{OC}	R_L = 54Ω or 60Ω or 100Ω		1	V_{CC}/2	V_{CC}	V
Change in Magnitude of Common-Mode Voltage	ΔV_{OC}	R_L = 54Ω or 60Ω or 100Ω	(Note 2)	-0.2		+0.2	V
Single-Ended Driver Output Voltage High	V_{OH}	Z or Y output, output is high, I_{SOURCE} = 3mA		2.4	V_{CC}-0.2		V
Single-Ended Driver Output Voltage Low	V_{OL}	Z or Y output, output is low, I_{SINK} = 3mA				0.2	V
Driver Short-Circuit Output Current	I_{SC_DR}	-7V ≤ (V_Y or V_Z) ≤ +12V				±250	mA
Average Driver Short-Circuit Output Current	I_{AVG_SCDR}	0V ≤ (V_Y or V_Z) ≤ V_{CC}				250	mA
RECEIVER							
Input Current (A, B)	I_A, I_B	DE = 0V, 0V ≤ V_{CC} ≤ 5.5V, V_{CM} = -7V to +12V		-73		+125	µA
Receiver Input Resistance	R_{IN}	-7V ≤ V_{CM} ≤ +12V		96			kΩ
Common Mode Voltage Range	V_{CM}			-7		+12	V
Receiver Differential Threshold Voltage Rising	V_{TLH}	-7V ≤ V_{CM} ≤ +12V				-50	mV
Receiver Differential Threshold Voltage Falling	V_{THL}	-7V ≤ V_{CM} ≤ +12V		-200			mV

(V_{CC} = 3.0V to 3.6V and V_{CC} = 4.5V to 5.5V, T_A = T_{MIN} to T_{MAX}, unless otherwise specified. Typical values are at V_{CC} = +5V and TA = +25°C. (Note 1))

PARAMETER	SYMBOL	CONDITIONS		MIN	TYP	MAX	UNITS
Receiver Input Hysteresis	ΔV_{TH}				100		mV
Differential Input Capacitance	C_{A_B}	Measured between A and B, f = 1MHz	(Note 3)		5		pF
LOGIC OUTPUT (RO)							
Output Logic High Voltage	V_{OH}	I_{SOURCE} = 3mA, (V_A-V_B) ≥ -50mV		V_{CC}-0.4			V
Output Logic Low Voltage	V_{OL}	I_{SINK} = 3mA, (V_A-V_B) ≤ -200mV				0.4	V
Leakage Current	I_{OZR}	0V ≤ V_{RO} ≤ V_{CC}		-1		+1	µA
Short-Circuit Current	$\|I_{OSR}\|$	0V ≤ (V_A – V_B) ≤ V_{CC}			200		mA
LOGIC INPUT (DE, /RE\, DI)							
Input Logic High Voltage	V_{IH}			2			V
Input Logic Low Voltage	V_{IL}					0.8	V
Input Hysteresis	V_{HYS}				100		mV
Input Leakage Current	I_{IN}	After first transition of DE		-1		+1	µA
DE Input Impedance on First Transition	R_{IN_FT}			1		10	kΩ
PROTECTION							
Thermal Shutdown Threshold	T_{SHDN}	Temperature rising			+160		°C
Thermal Shutdown Hysteresis	T_{HYST}				12		°C
ESD Protection (A, B, Y, Z Pins to GND)		Human Body Model as per JEDEC JS-001-2017			±40		kV
		Air Gap Discharge as per IEC 61000-4-2			±15		
		Contact Discharge as per IEC 61000-4-2			±10		
ESD Protection (All Other Pins)		Human Body Model as per JEDEC JS-001-2017			±4		kV
		Charge Device Model			±2		
Fault Protection (A, B, Y, Z Pins to GND)				-25		+25	V
SWITCHING DRIVER (MAX33047E)							
Differential Driver Propagation Delay	t_{DPLH}, t_{DPHL}	R_L = 54Ω, C_L = 50pF				1000	ns
Differential Driver Output Skew $\|t_{DPLH} – t_{DPHL}\|$	t_{DSKEW}	R_L = 54Ω, C_L = 50pF				140	ns
Driver Differential Output Rise or Fall Time	t_{LH}, t_{HL}	R_L = 54Ω, C_L = 50pF				600	ns
Slew Rate (TBD)							V/µs

(V_{CC} = 3.0V to 3.6V and V_{CC} = 4.5V to 5.5V, T_A = T_{MIN} to T_{MAX}, unless otherwise specified. Typical values are at V_{CC} = +5V and TA = +25°C. (Note 1))

PARAMETER	SYMBOL	CONDITIONS	MIN	TYP	MAX	UNITS
Maximum Data Rate	DR_{MAX}		500			kbps
SWITCHING DRIVER (MAX33048E, MAX33049E)						
Differential Driver Propagation Delay	t_{DPLH}, t_{DPHL}	R_L = 54Ω, C_L = 50pF			40	ns
Differential Driver Output Skew $\lvert t_{DPLH} - t_{DPHL} \rvert$	t_{DSKEW}	R_L = 54Ω, C_L = 50pF			9	ns
Driver Differential Output Rise or Fall Time	t_{LH}, t_{HL}	R_L = 54Ω, C_L = 50pF		8	15	ns
Maximum Data Rate	DR_{MAX}		20			Mbps
Driver Enable to Output High	t_{DZH}	R_L = 110Ω, C_L = 50pF, MAX33049E			90	ns
Driver Enable to Output Low	t_{DZL}	R_L = 110Ω, C_L = 50pF, MAX33049E			90	ns
Driver Disable Time from Low	t_{DLZ}	R_L = 110Ω, C_L = 50pF, MAX33049E			60	ns
Driver Enable Time from High	t_{DHZ}	R_L = 110Ω, C_L = 50pF, MAX33049E			60	ns
Driver Enable Time from Shutdown to Output High	$t_{DZH(SHDN)}$	R_L = 110Ω, C_L = 50pF, MAX33049E			170	µs
Driver Enable Time from Shutdown to Output Low	$t_{DZL(SHDN)}$	R_L = 110Ω, C_L = 50pF, MAX33049E			170	µs
Time to Shutdown	t_{SHDN}	MAX33049E (Note 4)	50	800	1500	ns
SWITCHING RECEIVER (MAX33047E)						
Receiver Propagation Delay	t_{RPLH}, t_{RPHL}	R_L = 1kΩ, C_L = 15pF			200	ns
Receiver Output Skew	t_{RSKEW}	R_L = 1kΩ, C_L = 15pF			30	ns
Maximum Data Rate	DR_{MAX}		500			kbps
SWITCHING RECEIVER (MAX33048E, MAX33049E)						
Receiver Propagation Delay	t_{RPLH}, t_{RPHL}	R_L = 1kΩ, C_L = 15pF			75	ns
Receiver Output Skew	t_{RSKEW}	R_L = 1kΩ, C_L = 15pF			10	ns
Maximum Data Rate	DR_{MAX}		20			Mbps
Receiver Enable to Output High	t_{RZH}	R_L = 1kΩ, C_L = 15pF, MAX33049E			50	ns
Receiver Enable to Output Low	t_{RZL}	R_L = 1kΩ, C_L = 15pF, MAX33049E			50	ns
Receiver Disable Time from Low	t_{RLZ}	R_L = 1kΩ, C_L = 15pF, MAX33049E			50	ns

(V_{CC} = 3.0V to 3.6V and V_{CC} = 4.5V to 5.5V, T_A = T_{MIN} to T_{MAX}, unless otherwise specified. Typical values are at V_{CC} = +5V and TA = +25°C. (*Note 1*))

PARAMETER	SYMBOL	CONDITIONS		MIN	TYP	MAX	UNITS
Receiver Disable Time from High	t_{RHZ}	R_L = 1kΩ, C_L = 15pF, MAX33049E				50	ns
Receiver Enable from Shutdown to Output Low	$t_{RZL(SHDN)}$	R_L = 1kΩ, C_L = 15pF, MAX33049E				170	µs
Receiver Enable from Shutdown to Output High	$t_{RZH(SHDN)}$	R_L = 1kΩ, C_L = 15pF, MAX33049E				170	µs
Time to Shutdown	t_{SHDN}	MAX33049E	(*Note 4*)	50	800	1500	ns
Delay to Fail-Safe Operation	t_{D_FS}				10		µs

Note 1: All devices 100% production tested at T_A = +25°C. Specifications over temperature are guaranteed by design.

Note 2: ΔV_{OD} and ΔV_{OC} are the changes in V_{OD} and V_{OC}, respectively, when DI changes state.

Note 3: Capacitive load includes test probe and fixture capacitance.

Note 4: Shutdown is enabled when $\overline{RE}$ is high and DE is low. If the enable inputs are in this state for less than 50ns, the device is guaranteed not to enter shutdown. If the enable inputs are held in this state for at least 1500ns, the device is guaranteed to have entered shutdown.

Timing Diagrams

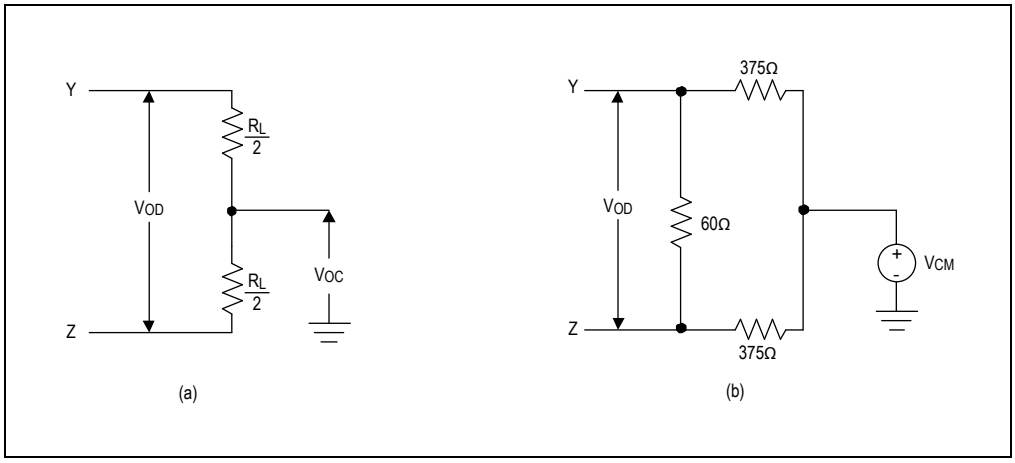

Figure 1. Driver DC Test Load

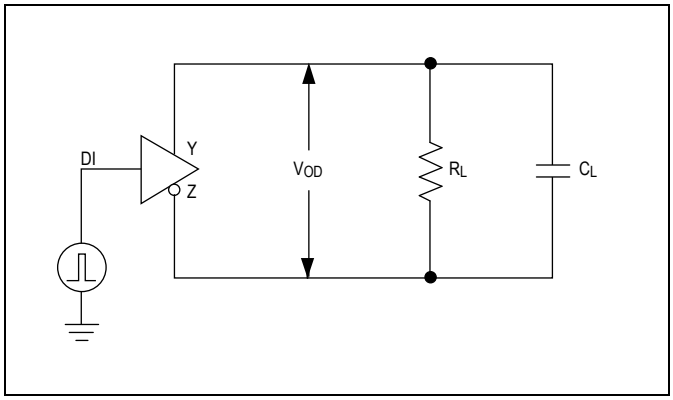

Figure 2. Driver Timer Test Circuit

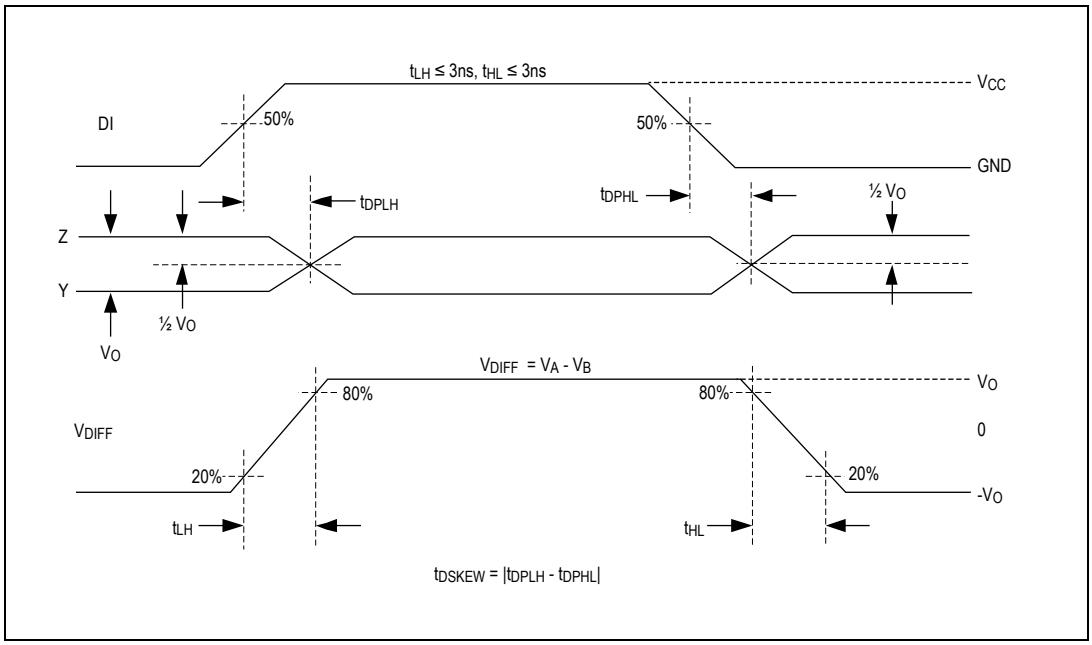

Figure 3. Driver Propagation Delays

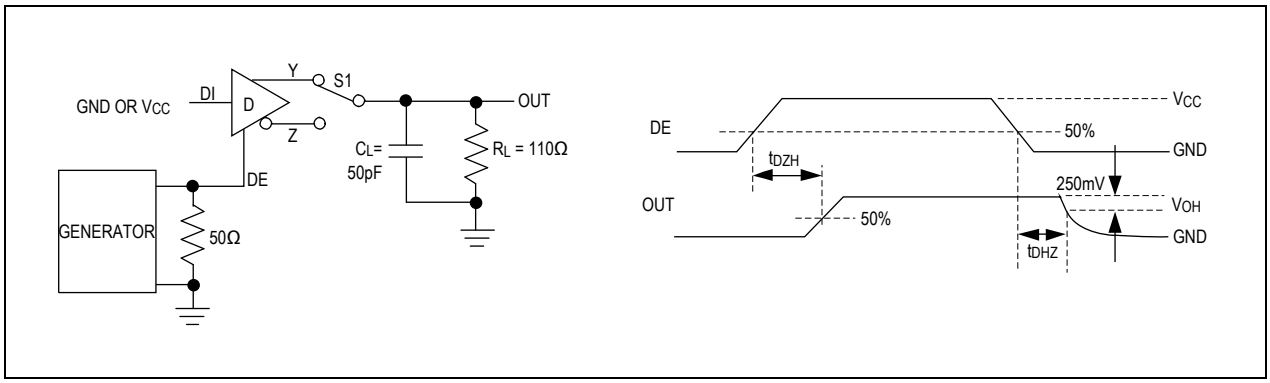

Figure 4. Driver Enable and Disable Times (t_{DHZ}, t_{DZH})

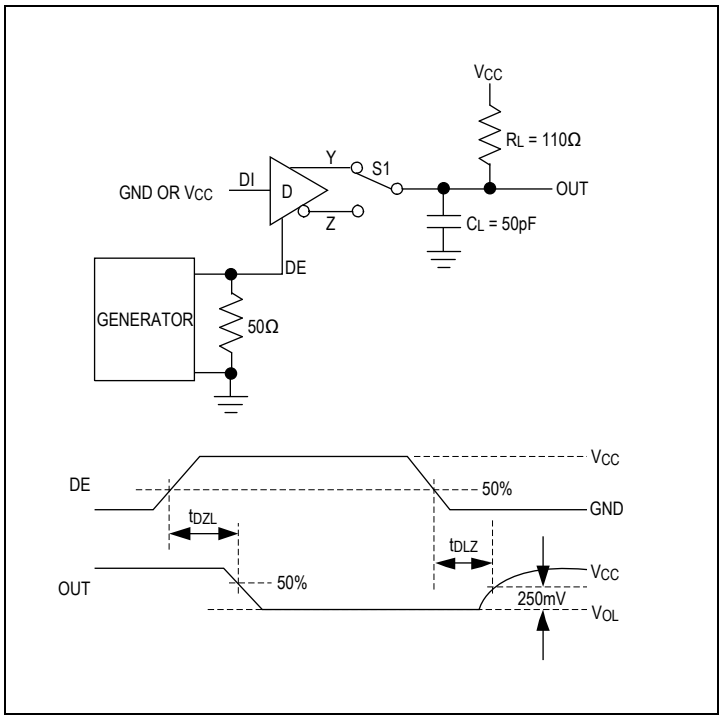

Figure 5. Driver Enable and Disable Times (t_{DZL}, t_{DLZ})

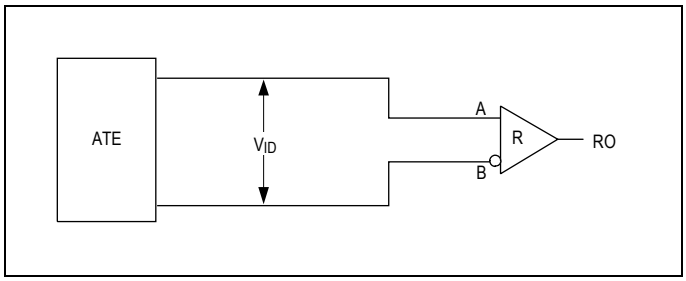

Figure 6. Receiver Propagation Delay Test Circuit

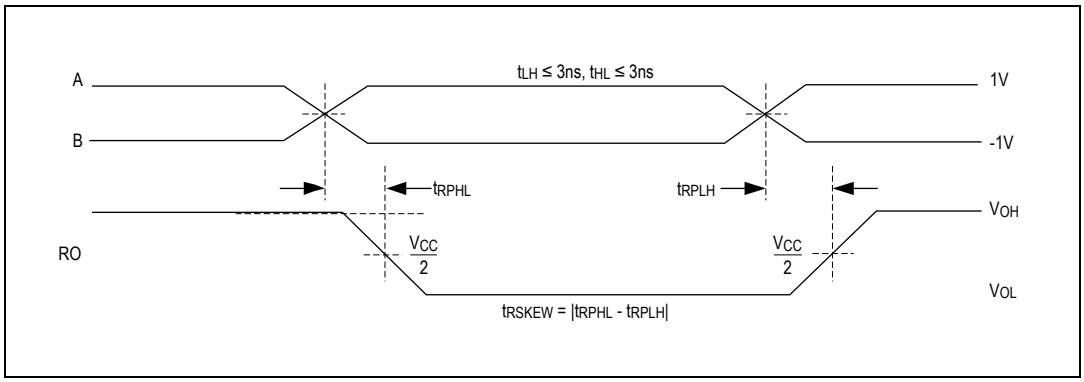

Figure 7. Receiver Propagation Delays

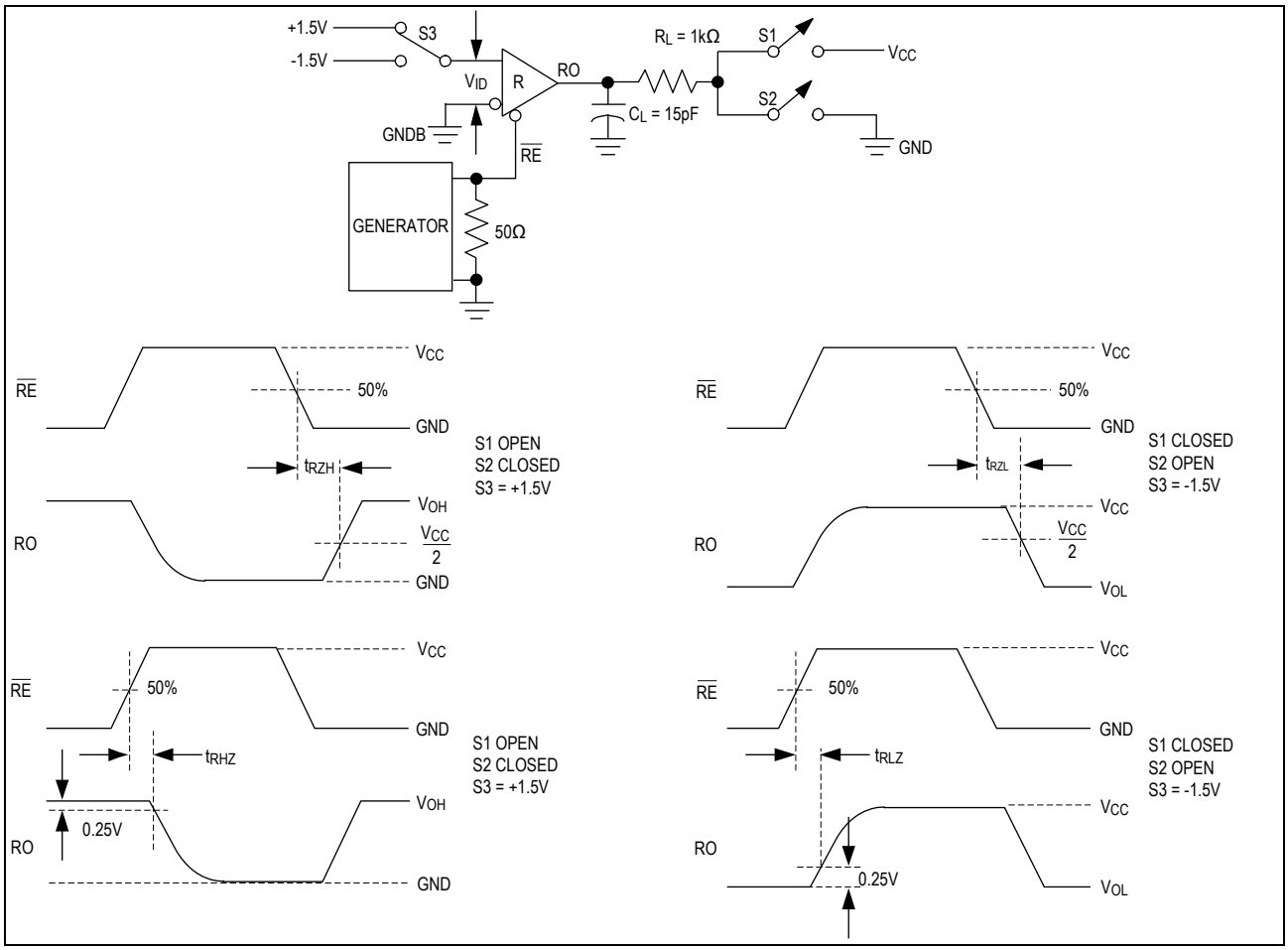

Figure 8. Receiver Enable and Disable Times

Typical Operating Characteristics

(V_{CC} = +3.3V/+5V and T_A = +25°C, unless otherwise noted.)

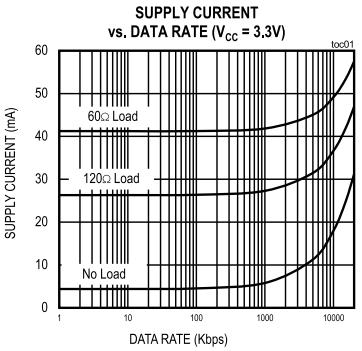

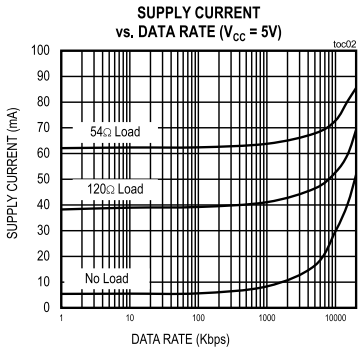

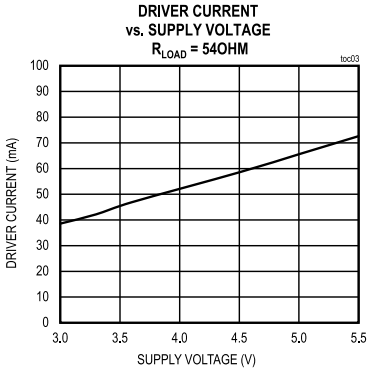

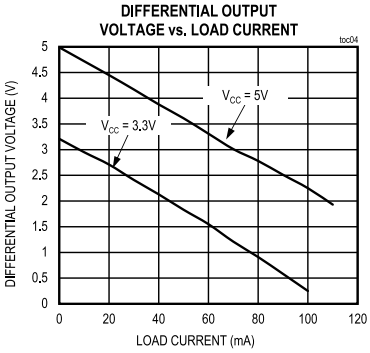

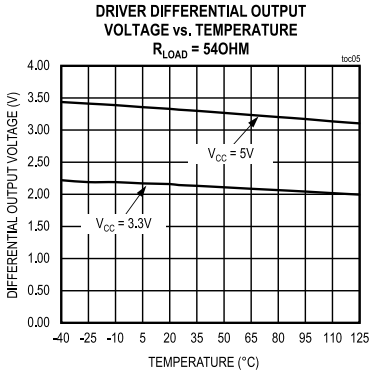

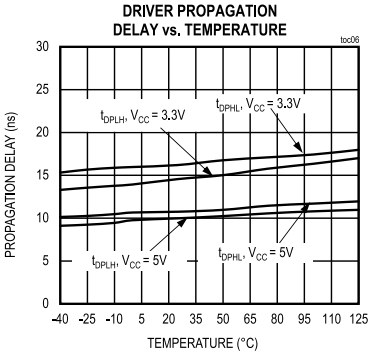

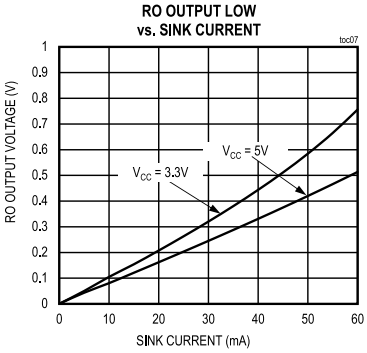

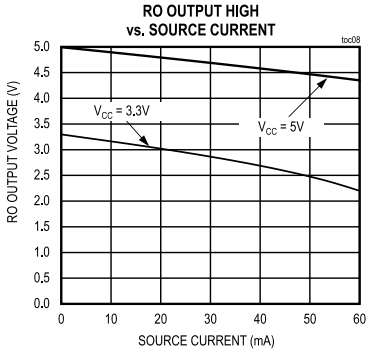

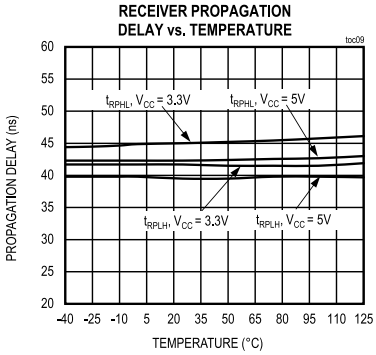

(V_{CC} = +3.3V/+5V and T_A = +25°C, unless otherwise noted.)

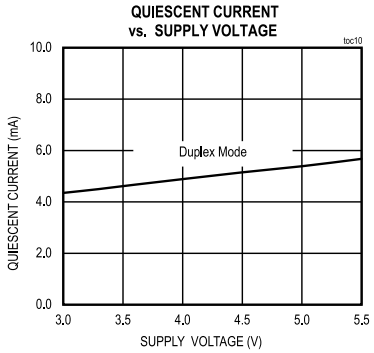

Pin Configurations

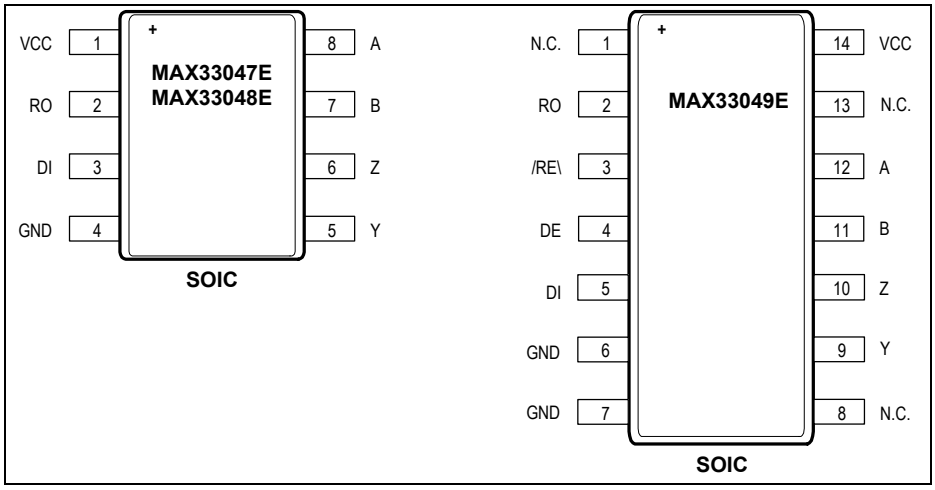

Pin Descriptions

PIN		NAME	FUNCTION
MAX33049E	MAX33047E /MAX333048 E		
1,8,13	-	N.C.	No Connection. Not internally connected.
2	2	RO	Receiver Output. Drive $\overline{RE}$ low to enable RO. RO is high when the receiver inputs (VA – VB) > -50mV and low when (VA – VB) ≤ -200mV. For more information, see *Table 2*.
3	-	RE	Receiver Output Enable. Drive $\overline{RE}$ low, or leave unconnected, to enable RO. RO is high impedance when is high. Drive $\overline{RE}$ high and DE low to enter low-power shutdown mode. $\overline{RE}$ has a weak pulldown to GND.
4	-	DE	Driver Enable. Drive DE high, or leave unconnected, to enable the driver outputs (Y and Z for full duplex, A and B for half duplex). The driver outputs are high impedance when DE is low. Drive $\overline{RE}$ high and DE low to enter low-power shutdown mode. DE has a weak pullup to V_{CC}.
5	3	DI	Driver Input. A low on DI forces the noninverting output (Y or A) low and the inverting output (Z or B) high. Similarly, a high on DI forces the noninverting output (Y or A) high and the inverting output (Z or B) low. For more information, see *Table 1*.
6, 7	4	GND	Ground.
9	5	Y	Noninverting Driver Output.
10	6	Z	Inverting Driver Output.
11	7	B	Inverting Receiver Input.
12	8	A	Noninverting Receiver Input.
14	1	V_{CC}	Positive Supply. Bypass V_{CC} to GND with a 0.1µF capacitor as close as possible to the IC.

Detailed Description

The MAX33047E-49E full-duplex transceivers are optimized for RS-485/RS-422 applications as per the EIA/TIA485 standard. These devices contain one differential driver and one differential receiver. They feature a 1/8-unit load, which allows up to 256 transceivers on a single bus. The MAX33047E supports data rates up to 500kbps, and the MAX33048E/MAX33049E supports data rates up to 20Mbps.

Driver

The driver accepts a single-ended, logic-level input (DI) and transfers it to a differential RS-485/RS-422 level output on the A and B driver outputs. Set the driver enable input (DE) low to disable the driver. A and B are high impedance when the driver is disabled.

Table 1. Driver Function

$\overline{RE}$	DE	DI	Y	Z
X	1	0	0	1
X	1	1	1	0
0	0	X	High-Z	High-Z
1	0	X	High-Z	High-Z

Receiver

The receiver accepts a differential, RS-485/RS-422 level input on the A and B inputs and transfers it to a single-ended, logic-level output (RO). Drive the receiver enable input ($\overline{RE}$) low to enable the receiver. Drive $\overline{RE}$ high to disable the receiver. RO is high impedance when $\overline{RE}$ is high.

Table 2. Receiver Function

$\overline{RE}$	DE	(V_A-V_B)	RO
0	X	≥-50mV	1
0	X	≤-200mV	0
0	X	Open/Short	1
1	1	X	High-Z
1	0	X	High-Z and Shutdown

Fault Protection

These devices provide ±25V of fault protection. The A/B and Y/Z data lines can withstand a short from -25V to +25V. This extended overvoltage range makes it suitable for applications where accidental shorts to local power supply lines are possible due to human intervention.

Low-Power Shutdown

Drive DE low and $\overline{RE}$ high for at least 800ns to put the MAX33047E-49E into low-power shutdown mode. Supply current drops to 1µA when the device is in shutdown mode. A glitch-protection feature ensures that the MAX33047E-49E do not accidentally enter shutdown mode due to logic skews between DE and $\overline{RE}$ when switching between transmitting and receiving modes.

Hot-Swap Inputs

Inserting circuit boards into a hot or powered backplane may cause voltage transients on DE, and receiver inputs A and B that can lead to data errors. For example, upon initial circuit board insertion, the processor undergoes a power-up sequence. During this period, the high-impedance state of the output drivers makes them unable to drive the MAX33047E-49E DE input to a defined logic level. Meanwhile, leakage currents of up to 10µA from the high-impedance output, or capacitively coupled noise from V_{CC} or GND could cause an input to drift to an incorrect logic state. To prevent such a condition from occurring, the MAX33047E-49E feature a hot-swap input circuitry on DE to safeguard against unwanted driver activation during hot-swap situations. When V_{CC} rises, an internal pulldown circuit holds DE low for at least 10µs. After the first transition on DE, the internal pulldown/pullup circuitry becomes transparent, which resets the hot-swap tolerable inputs.

True Fail-Safe

The MAX33047E-49E include a true fail-safe feature that ensures the receiver output (RO) is high when the receiver inputs are shorted or open, or when they are connected to a differentially terminated transmission line with all drivers disabled. If the differential receiver input voltage (V_A - V_B) is greater than or equal to -50mV, RO is logic high.

Thermal Shutdown Protection

The MAX33047E-49E feature thermal-shutdown protection circuitry to protect the device. When the internal silicon junction temperature exceeds +160°C (typ), the driver outputs are disabled, and RO is high impedance. The driver and receiver outputs are re-enabled when the junction temperature falls below +148°C (typ).

Applications Information

256 Transceivers on the Bus

The RS-485 standard calls out a single unit load for 32 nodes on a bus. The MAX33047E-49E have a 1/8 unit load, which enables 256 nodes for applications that require a larger network.

Driver Output Protection

Two mechanisms prevent excessive output current and power dissipation caused by faults or by bus connection. The first, a current limit on the output stage provides immediate protection against short circuits over the whole common-mode voltage range. The second, a thermal-shutdown circuit, forces the driver outputs into a high-impedance state if the die temperature exceeds +160°C (typ).

ESD Protection

ESD protection structures are incorporated on all pins to protect against electrostatic discharge encountered during handling and assembly. The driver outputs and receiver inputs of the MAX33047E-49E have extra protection against static electricity. The ESD structures withstand high ESD in normal operation and when powered down. After an ESD event, the devices keep working without latchup or damage. ESD protection can be tested in various ways. The transmitter outputs and receiver inputs of the devices are characterized for protection to the cable-side ground to the following limits:

- ±40kV HBM as per JEDEC JS-001-2017
- ±15kV using the Air-Gap Discharge method specified in the IEC 61000-4-2
- ±10kV using the Contact Discharge method specified in the IEC 61000-4-2

Typical Application Circuits

The MAX33047E-49E transceivers are designed for bidirectional data communications on multipoint bus transmission lines. As seen in the following typical network application circuit, to minimize reflections, terminate the line at both ends with its characteristic impedance and keep stub lengths off the main line as short as possible.

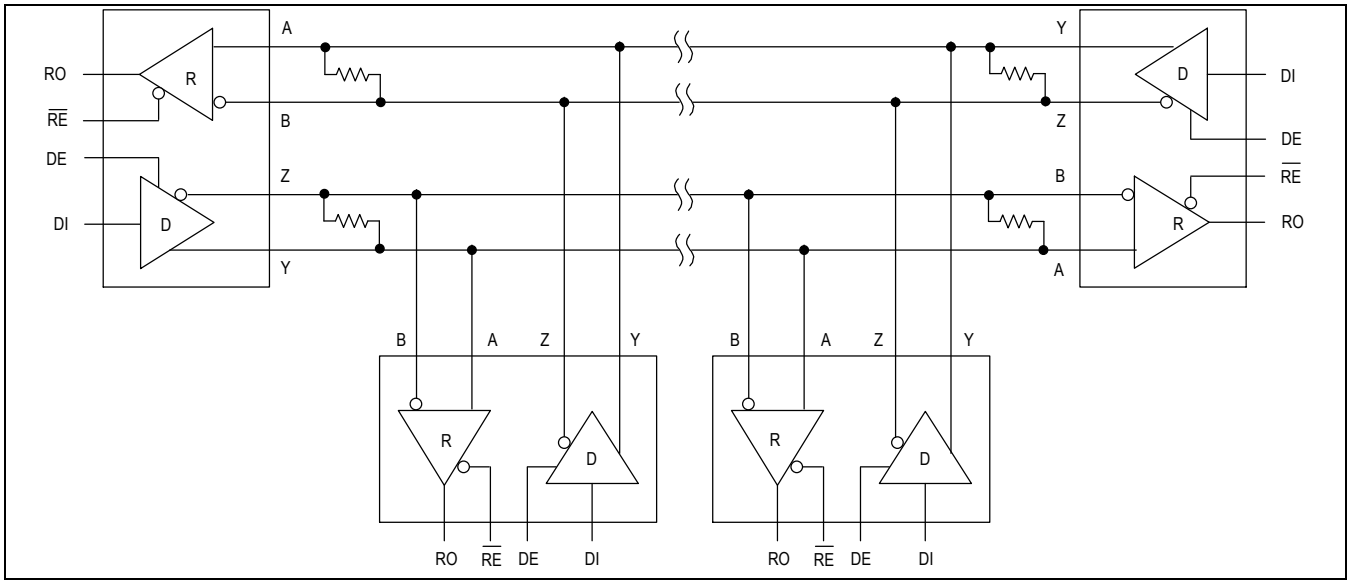

Ordering Information

Part Number	Temp Range	Pin-Package	Data Rate	Nodes
MAX33047EASA+*	-40°C TO +125°C	8-pin SOIC	500Kbps	256
MAX33048EASA+	-40°C TO +125°C	8-pin SOIC	20Mbps	256
MAX33049EASD+*	-40°C TO +125°C	14-pin SOIC	20Mbps	256

+ = Denotes a lead(Pb)-free/RoHS-compliant package.

**Future product—contact factory for availability.*

Revision History

REVISION NUMBER	REVISION DATE	DESCRIPTION	PAGES CHANGED
0	07/22	Release for market intro	—

Information furnished by Analog Devices is believed to be accurate and reliable. However, no responsibility is assumed by Analog Devices for its use, nor for any infringements of patents or other rights of third parties that may result from its use. Specifications subject to change without notice. No license is granted by implication or otherwise under any patent or patent rights of Analog Devices. Trademarks and registered trademarks are the property of their respective owners.

Mouser Electronics

Authorized Distributor

Click to View Pricing, Inventory, Delivery & Lifecycle Information:

Analog Devices Inc.:

MAX33048EASA+ MAX33048EASA+T