Omron Sentech 4K Camera

HDMI Output 4K Color Camera



Features

- HD Output 4K 60fps camera
- Available 120fps output (1080p) at Full HD mode

* Monitor screen must support 4K resolutions,
* Connectable to the monitor directly using HDMI connector
* Optimized for observation systems that do not have a PC

Product Line-Up

Model	Color	STC-HD853HDMI
Resolution		4K 2160P
Frame Rate		60fps
Effective Pixels		3840 × 2160
Sensor Size		1/2.5”
Cell Size (HxV, µm)		1.62 × 1.62
Sensor Type		CMOS
Sensor		IMX274
Lens Mount		C
General Specifications		

Accessories

AC Adapter		
Model	Applicable Model	Connector Configuration
UN310-1210	All DVI/SDI models	DC jack type, Input: 100-240 Vac, Output: 12V1A

Remote Control Unit		
Model	Applicable Model	Connector Configuration
RC-HD133	All DVI/SDI models	φ3.5 stereo pin jack

External Connector Specification

External Link Connectors	HDMI connector: HDMI 2.0 compliant, power supply: MP121 equivalent, communications: φ3.5 stereo pin jack

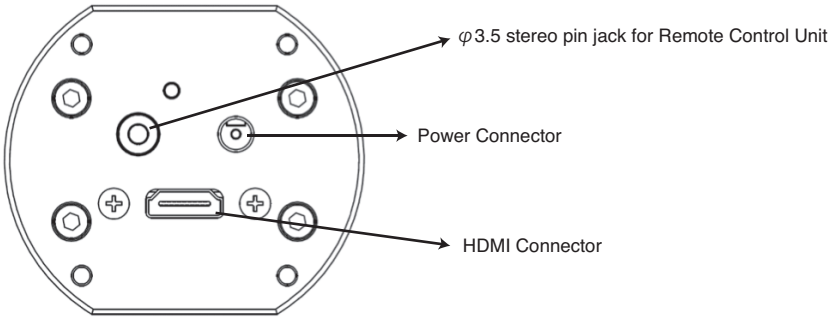

Drawing Dimension

STC-HD853HDMI

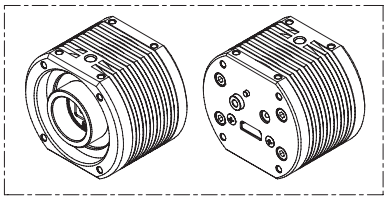

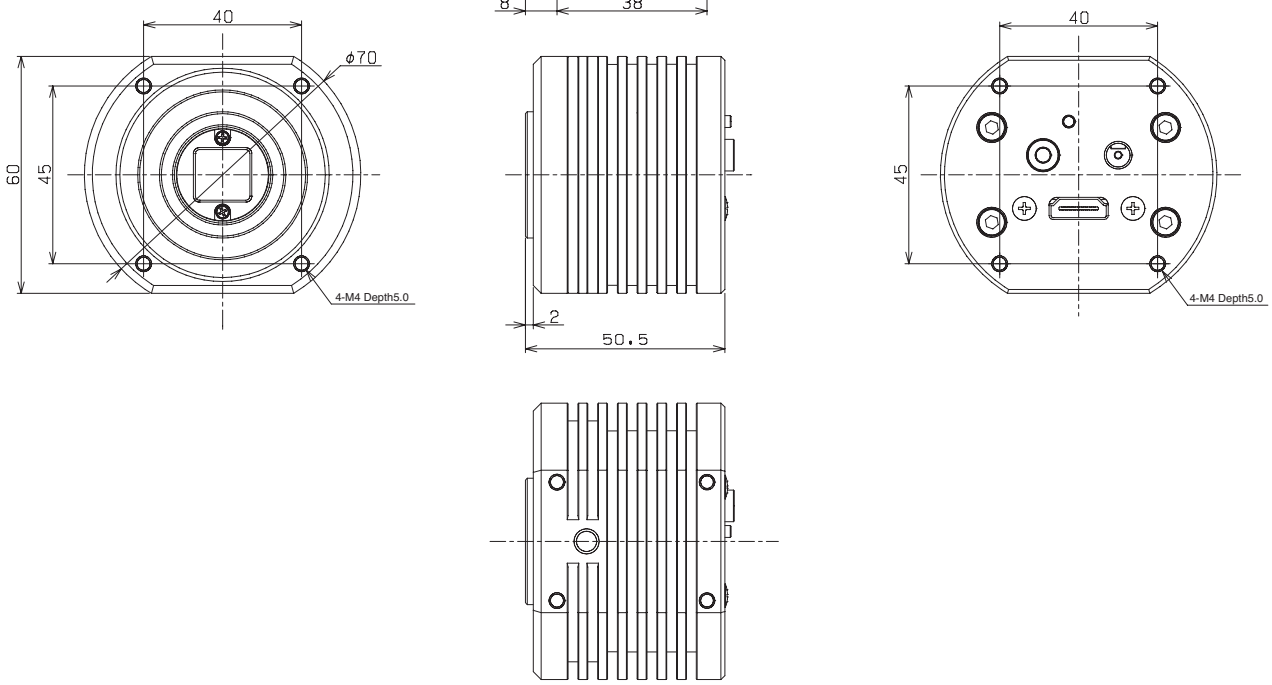

OMRON AUTOMATION AMERICAS HEADQUARTERS • Chicago, IL USA • 847.843.7900 • 800.556.6766 • automation.omron.com

OMRON CANADA, INC. • HEAD OFFICE
Toronto, ON, Canada • 416.286.6465 • 866.986.6766 • automation.omron.com

OMRON ELECTRONICS DE MEXICO • HEAD OFFICE
Ciudad de México • 52.55.5901.4300 • 01.800.386.6766 • mela@omron.com

OMRON ELECTRONICS DE MEXICO • SALES OFFICE
San Pedro Garza García, N.L. • 81.12.53.7392 • 01.800.386.6766 • mela@omron.com

OMRON ELECTRONICS DE MEXICO • SALES OFFICE
Eugenio Garza Sada,León, Gto • 01.800.386.6766 • mela@omron.com

OMRON ELETRÔNICA DO BRASIL LTDA • HEAD OFFICE
São Paulo, SP, Brasil • 55.11.2101.6300 • www.omron.com.br

OMRON ARGENTINA • SALES OFFICE
Buenos Aires, Argentina • +54.11.4521.8630 • +54.11.4523.8483
mela@omron.com

OTHER OMRON LATIN AMERICA SALES
+54.11.4521.8630 • +54.11.4523.8483 • mela@omron.com

Authorized Distributor:

Controllers & I/O
• Machine Automation Controllers (MAC) • Motion Controllers
• Programmable Logic Controllers (PLC) • Temperature Controllers • Remote I/O

Robotics
• Industrial Robots • Mobile Robots

Operator Interfaces
• Human Machine Interface (HMI)

Motion & Drives
• Machine Automation Controllers (MAC) • Motion Controllers • Servo Systems
• Frequency Inverters

Vision, Measurement & Identification
• Vision Sensors & Systems • Measurement Sensors • Auto Identification Systems

Sensing
• Photoelectric Sensors • Fiber-Optic Sensors • Proximity Sensors
• Rotary Encoders • Ultrasonic Sensors

Safety
• Safety Light Curtains • Safety Laser Scanners • Programmable Safety Systems
• Safety Mats and Edges • Safety Door Switches • Emergency Stop Devices
• Safety Switches & Operator Controls • Safety Monitoring/Force-guided Relays

Control Components
• Power Supplies • Timers • Counters • Programmable Relays
• Digital Panel Meters • Monitoring Products

Switches & Relays
• Limit Switches • Pushbutton Switches • Electromechanical Relays
• Solid State Relays

Software
• Programming & Configuration • Runtime

ST107-E1-01 Note: Specifications are subject to change. © 2019 Omron. All Rights Reserved. Printed in U.S.A.

Printed on recycled paper.

Mouser Electronics

Authorized Distributor

Click to View Pricing, Inventory, Delivery & Lifecycle Information:

Omron:
STC-HD853HDMI