1T 8051

8-bit Microcontroller

NuTiny-MS51DA
User Manual
NuMicro® 8051 Series

The information described in this document is the exclusive intellectual property of Nuvoton Technology Corporation and shall not be reproduced without permission from Nuvoton.

Nuvoton is providing this document only for reference purposes of NuMicro microcontroller based system design. Nuvoton assumes no responsibility for errors or omissions.

All data and specifications are subject to change without notice.

For additional information or questions, please contact: Nuvoton Technology Corporation.

www.nuvoton.com

Table of Contents

1 OVERVIEW 3
2 NUTINY-MS51DA INTRODUCTION 4
2.1 Virtual COM Port Switch Description 4
2.2 NuTiny-MS51DA Power Setting and Connector 4
2.2.1 Power Setting 4
2.2.2 Debug Connector 5
2.2.3 ICE USB Connector 5
2.2.4 Extended Connector 5
2.2.5 Reset Button 5
2.2.6 Power Connector 5
2.2.7 Virtual COM Port Function Switch 5
2.3 Pin Assignment for Extended Connector 6
3 HOW TO START NUTINY-MS51DA ON THE KEIL 7
3.1 Downloading and Installing Keil C-51 µVision® IDE Software 7
3.2 Downloading and Installing Nuvoton Nu-Link Driver 7
3.3 Hardware Setup 7
3.4 Example Program 7
4 NUTINY-MS51DA SCHEMATIC 10
4.1 Nu-Link-Me Schematic 10
4.2 NuTiny-MS51DA Schematic 11
5 DOWNLOAD RELATED FILES FROM NUVOTON WEBSITE 12
5.1 Downloading Nuvoton Keil C-51 µVision® IDE Driver 12
5.2 Downloading Nuvoton 8bit 8051 MCUs MS51 Series Sample Code 13
6 REVISION HISTORY 14

1 OVERVIEW

NuTiny-MS51DA is the specific development tool for 8-bit high performance 1T 8051-based microcontroller MS51 8K flash size series. User can use NuTiny-MS51DA to develop and verify the application program easily.

The MS51 contains a up to 8K Bytes of main Flash called APROM, in which the contents of User Code resides. The MS51 Flash supports In-Application-Programming (IAP) function, which enables on-chip firmware updates. IAP also makes it possible to configure any block of User Code array to be used as non-volatile data storage, which is written by IAP and read by IAP or MOVC instruction, this function means whole 8K Bytes area all can be use as Data Flash through IAP command. MS51 support an function of configurationable Flash from APROM called LDROM, in which the Boot Code normally resides for carrying out In-System-Programming (ISP). The LDROM size is configurable with a maximum of 4K Bytes by CONFIG define. There is an additional include special 128 bytes security protection memory (SPROM) to enhance the security and protection of customer application. To facilitate programming and verification, the Flash allows to be programmed and read electronically by parallel Writer or In-Circuit-Programming (ICP). Once the code is confirmed, user can lock the code for security.

The MS51 provides rich peripherals including 256 Bytes of SRAM, 1K Bytes of auxiliary RAM (XRAM), Up to 18 general purpose I/O, two 16-bit Timers/Counters 0/1, one 16-bit Timer2 with three-channel input capture module, one Watchdog Timer (WDT), one Self Wake-up Timer (WKT), one 16-bit auto-reload Timer3 for general purpose or baud rate generator, two UARTs with frame error detection and automatic address recognition, one SPI, one I2C, five enhanced PWM output channels, eight-channel shared pin interrupt for all I/O, and one 12-bit ADC. The peripherals are equipped with 18 sources with 4-level-priority interrupts capability.

The MS51 is equipped with three clock sources and supports switching on-the-fly via software. The three clock sources include external clock input, 10 kHz internal oscillator, and one 16 MHz internal precise oscillator that is factory trimmed to ±1% at room temperature. The MS51 provides additional power monitoring detection such as power-on reset and 4-level brown-out detection, which stabilizes the power-on/off sequence for a high reliability system design.

The MS51 microcontroller operation consumes a very low power with two economic power modes to reduce power consumption － Idle and Power-down mode, which are software selectable. Idle mode turns off the CPU clock but allows continuing peripheral operation. Power-down mode stops the whole system clock for minimum power consumption. The system clock of the MS51 can also be slowed down by software clock divider, which allows for a flexibility between execution performance and power consumption.

With high performance CPU core and rich well-designed peripherals, the MS51 benefits to meet a general purpose, home appliances, or motor control system accomplishment.

2 NUTINY-MS51DA INTRODUCTION

NuTiny-MS51DA uses the MS51DA9AEas the target microcontroller. Figure 2.1-1 is NuTiny-MS51DA for the MS51 8K flash size series, the left portion is called NuTiny-MS51DA and the right portion is Debug Adaptor called Nu-Link-Me.

NuTiny-MS51DA is similar to other development boards. User can use it to develop and verify applications to emulate the real behavior. The on-board chip covers MS51 series features. The NuTiny-MS51DA can be a real system controller to design user's target systems.

Nu-Link-Me is a Debug Adaptor. The Nu-Link-Me Debug Adaptor connects your PC's USB port to the user's target system (via Serial Wired Debug Port) and allows user to program and debug embedded programs on the target hardware. To use Nu-Link-Me Debug adaptor with Keil, please refer to "Nuvoton Nu-Link debug adapter user manual" in detail. This document will be stored in the local hard disk when user installs each driver. Nu-Link-Me also supports virtual COM port function. User can use Nu-Link-Me as a USB to UART virtual COM port, which connects to on-board MS51DA9AE UART0.

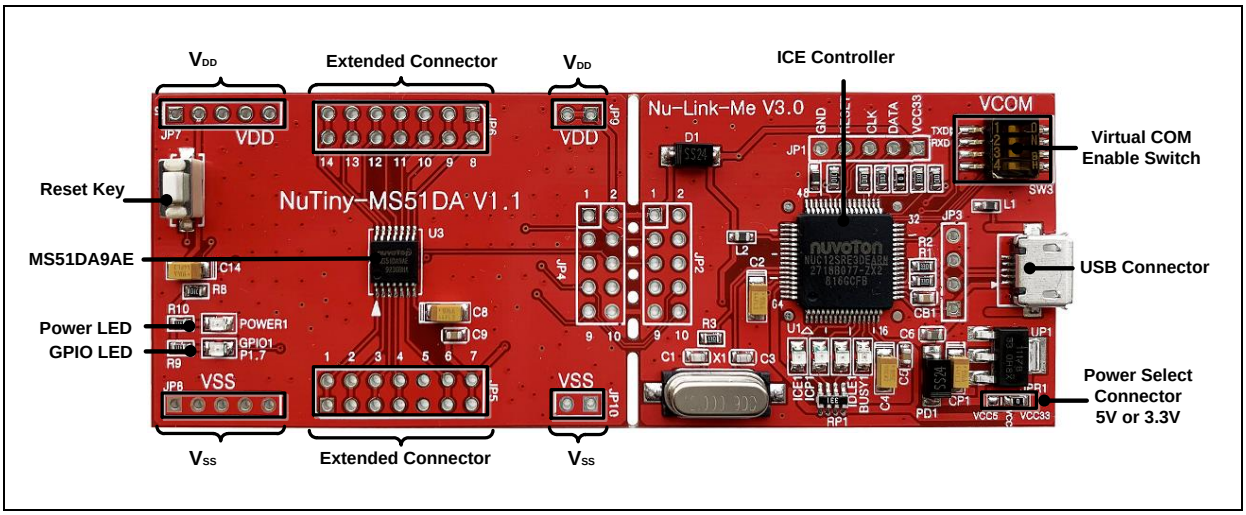

Figure 2.1-1 NuTiny-MS51DA (PCB Board)

2.1 Virtual COM Port Switch Description

The switch in Nu-Link-Me, SW3, determines that the virtual COM port function is enabled or disabled. When user turns on all of the positions of switch, the virtual COM port function will be enabled. By using virtual COM port function, user can access the USB device in the same way as it would access a standard COM port to MS51DA9AEUART0 (P3.1 and P3.0) . To use this function, user needs to install "VCOM Driver" at first. User can get "Nuvoton USB driver" from NuMicroDVD www.nuvoton.com\NuMicroDVD in folder "Software Utilities" or from website: Nu-Link_USB_Driver

2.2 NuTiny-MS51DA Power Setting and Connector

2.2.1 Power Setting

- J1: USB port in Nu-Link-Me
- JP7 and JP9: VCC33 Voltage connector in NuTiny-MS51DA

Model	JPR1	J1USB port	JP7 & JP9 VCC33	MCU Voltage
Model 1	**Select VCC33 (default)**	**Connect to PC**	**DC 3.3V output**	**DC 3.3V**
Model 2	**X**	**X**	**DC 2.4 V ~ 5.5 V Input**	**Voltage by JP7 & JP9 input**

2.2.2 Debug Connector

- JP4: Connector in target board (NuTiny-MS51DA) for connecting with Nuvoton ICE adaptor (Nu-Link-Me)
- JP2: Connector in ICE adaptor (Nu-Link-Me) for connecting with a target board (for example NuTiny-MS51DA)

2.2.3 ICE USB Connector

- J1: Mini USB Connector in Nu-Link-Me connected to a PC USB port

2.2.4 Extended Connector

- JP5 and JP6: Show all chip pins in NuTiny-MS51DA

2.2.5 Reset Button

- SW1: Reset button in NuTiny-MS51DA

2.2.6 Power Connector

- JP7 and JP9: V_{DD} connector in NuTiny-MS51DA
- JP8 and JP10: V_{SS} connector in NuTiny-MS51DA

2.2.7 Virtual COM Port Function Switch

- SW3: Switch ON/OFF to enable or disable Nu-Link-Me virtual COM port function.

Function	Switch				Descriptions
	1	2	3	4	
Enable	ON	ON	ON	ON	Enable Nu-Link-Me virtual COM port function
Disable	OFF	OFF	OFF	OFF	Disable Nu-Link-Me virtual COM port function

2.3 Pin Assignment for Extended Connector

NuTiny-MS51DA provides MS51DA9AE on board and the extended connector for TSSOP-14 pin.

Pin No	Pin Function	Pin No	Pin Function
01	P0.6/UART0_TXD/ADC_CH3	08	P1.0 / PWM0_CH2 / SPI0_CLK / IC2
02	nRESET/UART0_RXD/P2.0	09	P0.0 / PWM0_CH3 / SPI0_MOSI / T1 / IC3
03	P3.0/INT0/OSCIN/ADC_CH1	10	P0.1/ADC_CH7/PWM0_CH4/ SPI0_MISO/IC4/CLKO
04	P1.7/INT1/ADC_CH0/	11	P0.2/ICE_CLK/PWM0_CH0/UART1_RXD/IC0/ [I2C0_SCL]
05	VSS	12	P0.3/ADC_CH6/PWM0_CH5/I2C0_SCL/IC5/ [STADC]
06	P1.6/UART1_TXD/ICPDA/OCDDA/ [I2C0_SDA]	13	P0.4/ADC_CH5/STADC/PWM0_CH3/ I2C0_SDA/PWM_BRAKE/IC3
07	VDD	14	P0.5/ADC_CH4/PWM0_CH2/SPI0_SS/T0/IC6

Table 2.3-1 Pin Assignment for MS51DA9AE

3 HOW TO START NUTINY-MS51DA ON THE KEIL

3.1 Downloading and Installing Keil C-51 µVision® IDE Software

Please connect to the Keil company website (http://www.keil.com) to download the Keil C-51 µVision® IDE and install the RVMDK.

3.2 Downloading and Installing Nuvoton Nu-Link Driver

Please connect to Nuvoton 8bit 8051 MCUs website (http://www.nuvoton.com/8bit-8051-mcus) to download the "Nu-Link_Keil_Driver" file. Please refer to section 5.1 for the detailed download flow. After the Nu-Link driver is downloaded, please unzip the file and execute the file to install the driver.

3.3 Hardware Setup

The hardware setup is shown as Figure 3.3-1

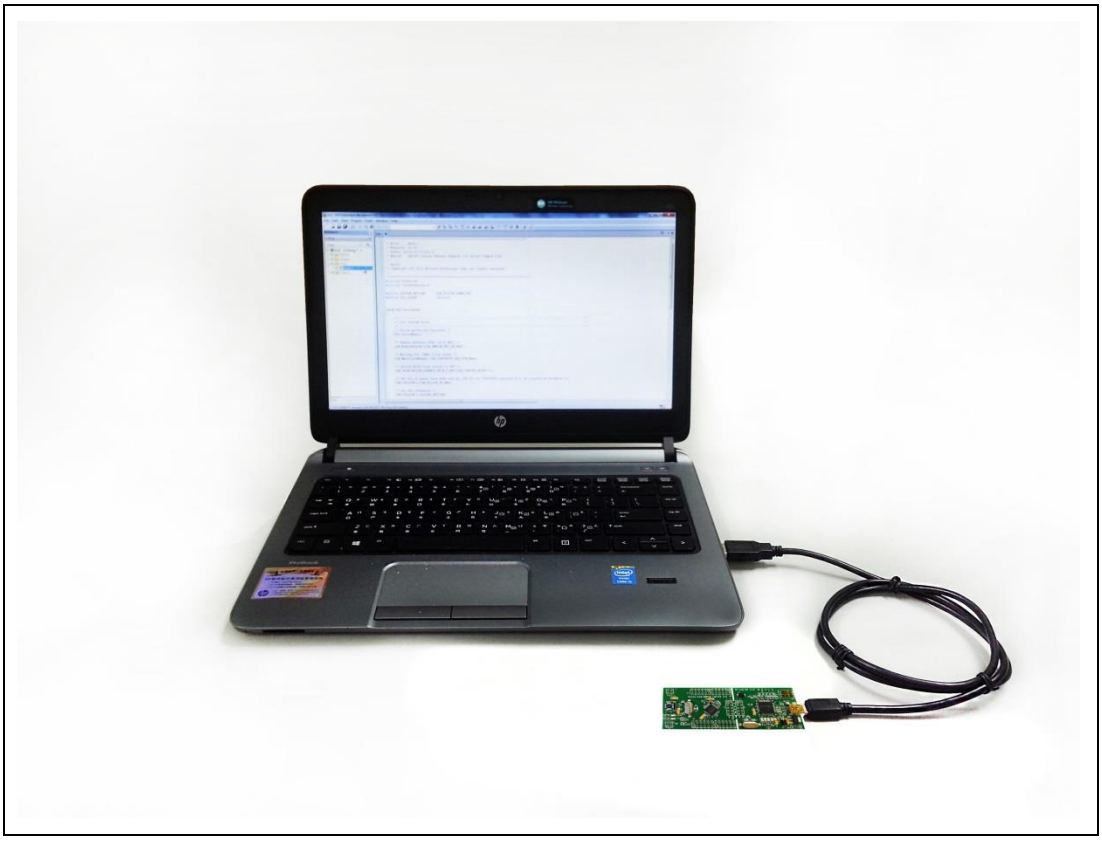

Figure 3.3-1 NuTiny-MS51DA Hardware Setup

3.4 Example Program

This example demonstrates the ease of downloading and debugging an application on a NuTiny-MS51DA board. It can be found on Figure 3.4-1 list directory and downloaded from Nuvoton 8bit 8051 MCUs website.

The example file can be found in the directory list shown in Figure 3.4-1.

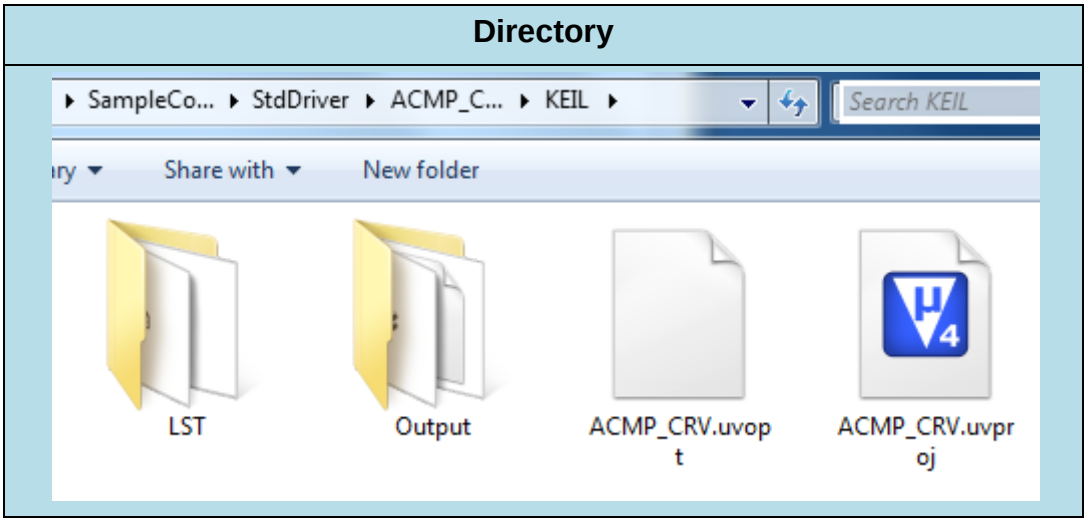

Figure 3.4-1 Example Directory

To use this example:

1. Open a project from the MS51 sample code installation folder (default as C:\Nuvoton) using the following path：

   \SampleCode\StdDriver\GPIO_InputOutput\KEIL\

2. Execute "**GPIO.uvproj**"

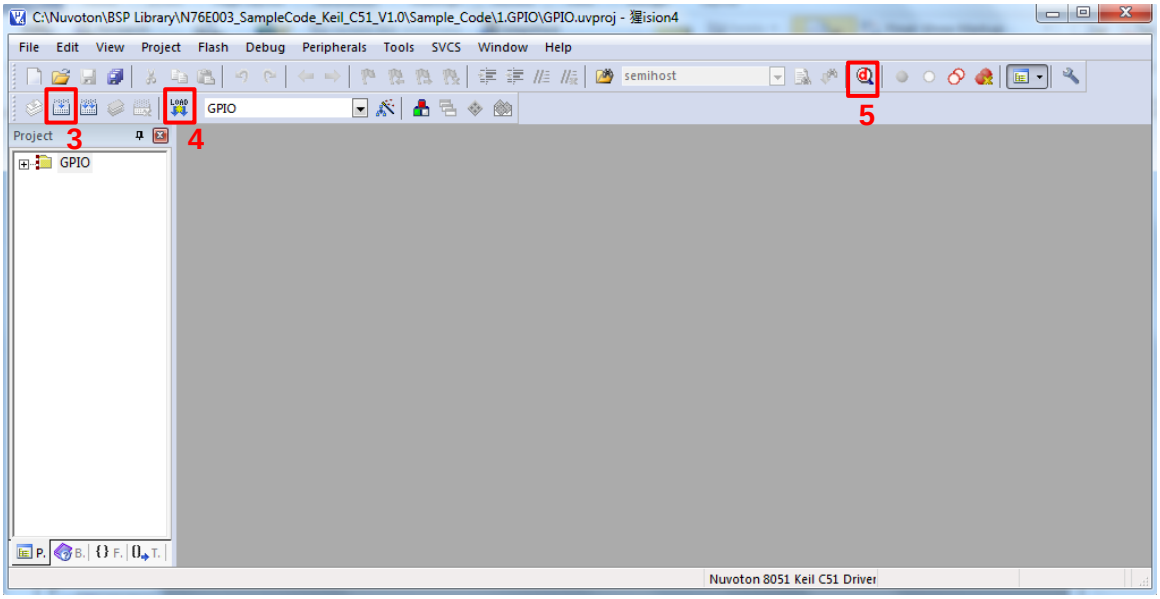

Enter compile mode interface

3. Compiler

4. Download the program code to Flash

5. Enter / Exit Debug mode

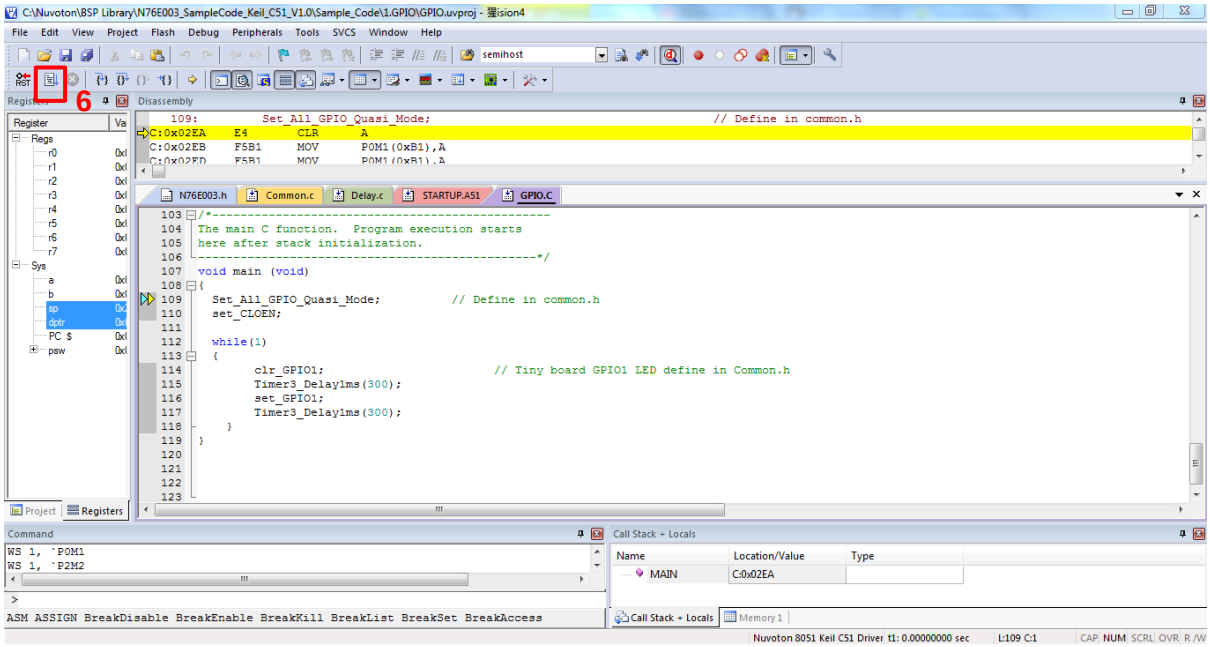

Enter Debug mode interface

6. Execute the program
7. The I/O LED on the NuTiny-MS51DA board will be toggled on.

4 NUTINY-MS51DA SCHEMATIC

4.1 Nu-Link-Me Schematic

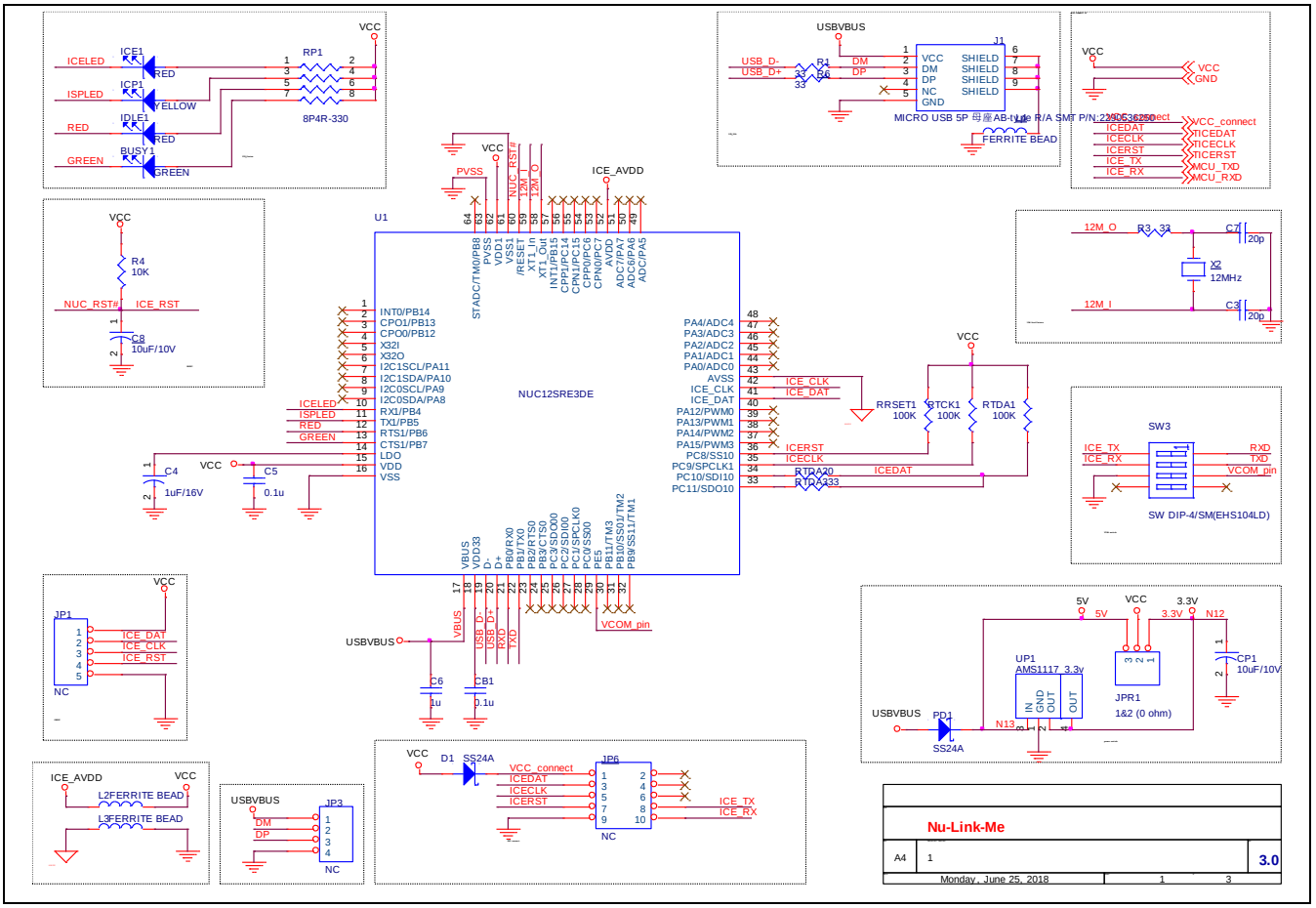

4.2 NuTiny-MS51DA Schematic

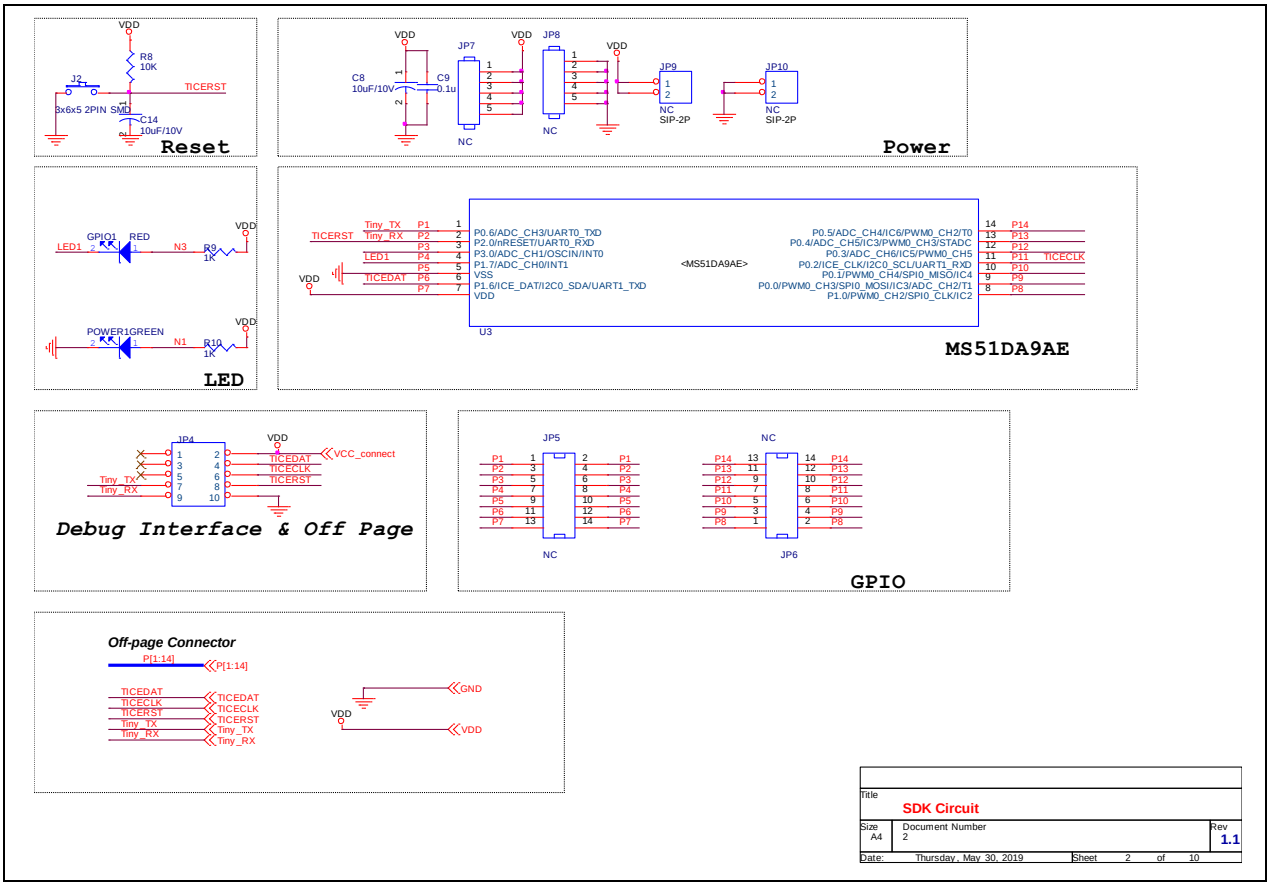

5 DOWNLOAD RELATED FILES FROM NUVOTON WEBSITE

5.1 Downloading Nuvoton Keil C-51 µVision® IDE Driver

Step1	Visit the Nuvoton 8bit 8051 MCUs website: **http://www.nuvoton.com/8bit-8051-mcus**
Step2	
Step3	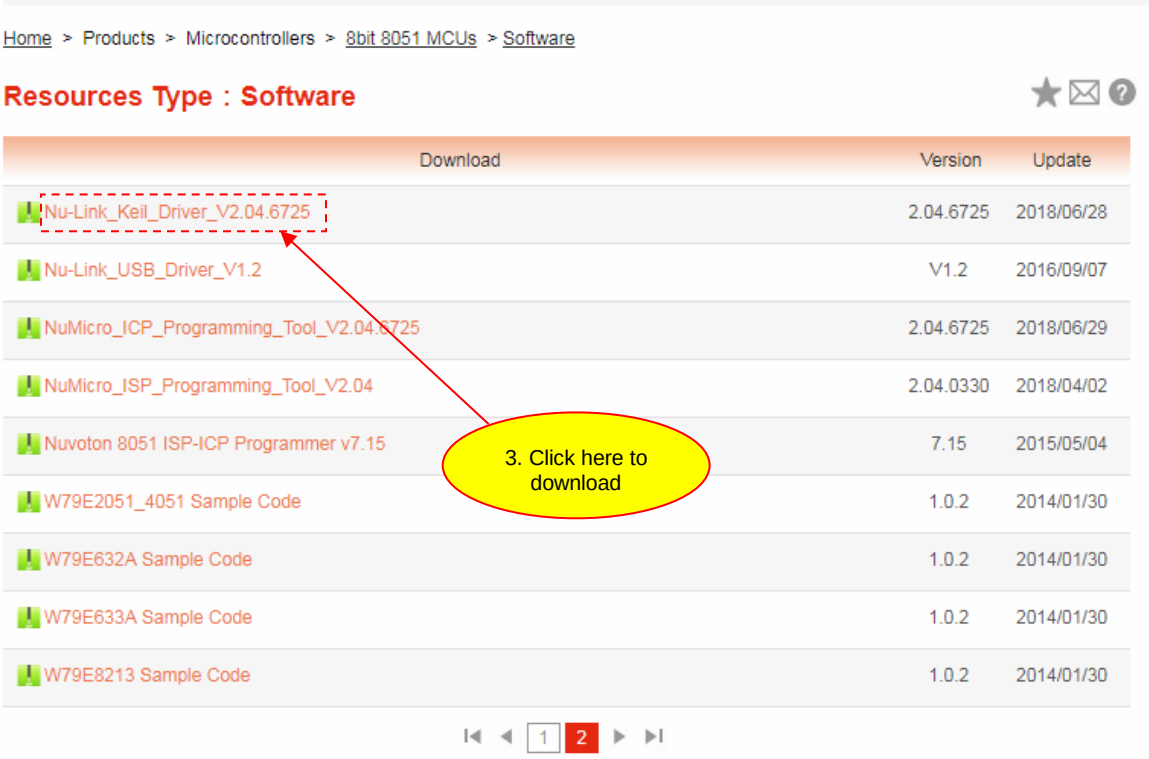
Step4	Download the Nuvoton_Keil_ Drive

5.2 Downloading Nuvoton 8bit 8051 MCUs MS51 Series Sample Code

Step1	Visit the Nuvoton 8bit 8051 MCUs website: http://www.nuvoton.com/8bit-8051-mcus
Step2	
Step3	Download the MS51_8K_Series_BSP_KEIL_V1.00

6 REVISION HISTORY

Date	Revision	Description
2019.06.29	1.00	Initial release

Important Notice

Nuvoton Products are neither intended nor warranted for usage in systems or equipment, any malfunction or failure of which may cause loss of human life, bodily injury or severe property damage. Such applications are deemed, "Insecure Usage".

Insecure usage includes, but is not limited to: equipment for surgical implementation, atomic energy control instruments, airplane or spaceship instruments, the control or operation of dynamic, brake or safety systems designed for vehicular use, traffic signal instruments, all types of safety devices, and other applications intended to support or sustain life.

All Insecure Usage shall be made at customer's risk, and in the event that third parties lay claims to Nuvoton as a result of customer's Insecure Usage, customer shall indemnify the damages and liabilities thus incurred by Nuvoton.

Please note that all data and specifications are subject to change without notice.
All the trademarks of products and companies mentioned in this datasheet belong to their respective owners.

Mouser Electronics

Authorized Distributor

Click to View Pricing, Inventory, Delivery & Lifecycle Information:

Nuvoton:

NT-MS51DA