KNERON-SDR-001

KP52B137A-FR

Dual-cam 3D FR Module Specification

warren.kuo @ kneron.us

Copyright Notice

©2023 Kneron Inc. All rights reserved. This material and documentation contain confidential and proprietary information that is the property of Kneron Inc. The material and documentation are furnished under a license agreement and may be used or copied only in accordance with the terms of the license agreement. No part of the material and documentation may be reproduced, transmitted, or translated, in any form or by any means, electronic, mechanical, manual, optical, or otherwise, without prior written permission of Kneron Inc., or as expressly provided by the license agreement.

Export Control Statement

All technical data contained in this publication is subject to the Taiwan export control laws, and may be subject to export or import regulations in other countries ("Export Law"). Disclosure to nationals of other countries contrary to Export Law is prohibited. It is the reader's responsibility to determine the applicable regulations and to comply with them.

Trademarks (™)

KNERON is trademark of Kneron Inc.

Arm® and AMBA® are registered trademarks of Arm® Limited.

All other product or company names may be trademarks of their respective owners.

warren.kuo @ kneron.us

San Diego HQ
10052 Mesa Ridge Court, Suite 101,
San Diego, CA 92121, U.S.A.
https://www.kneron.com/en/

Taipei Office
12F-1., No. 386, Sec. 6, Nanjing E. Rd.,
Neihu Dist. (114), Taipei City, Taiwan, R.O.C.
https://www.kneron.com/tw/

REVISION HISTORY

Revision	Date	Description
1.00	2024/05/01	Initial release.

warren.kuo @ kneron.us

REGISTER DESCRIPTION CONVENTIONS

The Access column of each register description that follows specifies how the application and the core can access the register fields of the CSRs. The Access column uses the following conventions:

Convention Names	Description
Read Only (R)	Register field can only be read by the application. Writes to read-only fields have no effect.
Write Only (W)	Register field can only be written by the application.
Read and Write (R/W)	Register field can be read and written by the application. The application can set this field by writing 1'b1 and can clear it by writing 1'b0.
Write Once Clear (W1Clr)	Register field can be written by the application. The bit can be cleared to 1'b0 by the application with a register write of 1'b0 (Write Clear).

warren.kuo @ kneron.us

TABLE OF CONTENTS

1. PRODUCT INTRODUCTION 6
2. PRODUCT COMPOSITION 6
   2.1. Module Structure 6
   2.2. Key Components 7
3. PRODUCT DIMENSIONS 7
   3.1. Board Appearance 8
   3.2. Board Dimensions 9
   3.3. Module Structure Decomposition 9
4. PRODUCT SPECIFICATION 10
5. INTERFACES AND PIN DEFINITIONS 10
6. CAMERA MODULE IMAGE TEST SPECIFICATIONS 13
7. NOTES FOR THE ENROLLMENT 14
8. MECHANIC CONSIDERATIONS 14
   8.1. Installation Orientation 14
   8.2. Angle of Camera Module 14
   8.3. Cover Lens on top of LED and Camera 16
   8.4. The opening window of LED 16
   8.5. The Opening Window of Cameras 17
   8.6. Distance between camera module and housing/cover lens 17
   8.7. Case of Flat Cover 18
9. PRECAUTIONS 19
   9.1. Precautions for Storage 19
   9.2. Precautions for Usage 20

warren.kuo @ kneron.us

1. Product Introduction

The 3D facial recognition module is based on AI chip platform with low power consumption, low cost and high security. With the help of powerful AI performance and fast response speed of RTOS, the module can complete facial recognition and unlock within 1.2s from cold start.

Leveraging powerful performance of AI chip, this module makes full use of the infrared information displayed on human face and wider spectral information of components like visible light, facial recognition, facial comparison and liveness detection. At the same time, the dual-camera is able to calculate the depth information of the human face through the parallax of feature points. Finally, our fusion algorithms will match all the information with the original data. When all the information are matched successfully, the optical authentication will pass. The false rate is merely under 1:100,000. The module not only can adapt well to indoor and outdoor lighting environment, but can also prevent misjudgments and minimize errors from a variety of materials such as photographs, videos and 3D masks effectively.

Applications: Smart lockAccess control Facial recognition terminal

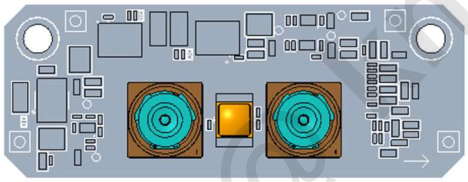

Figure 1: Physical object of the module

2. Product Composition

2.1. Module Structure

warren.kuo @ ineron.us

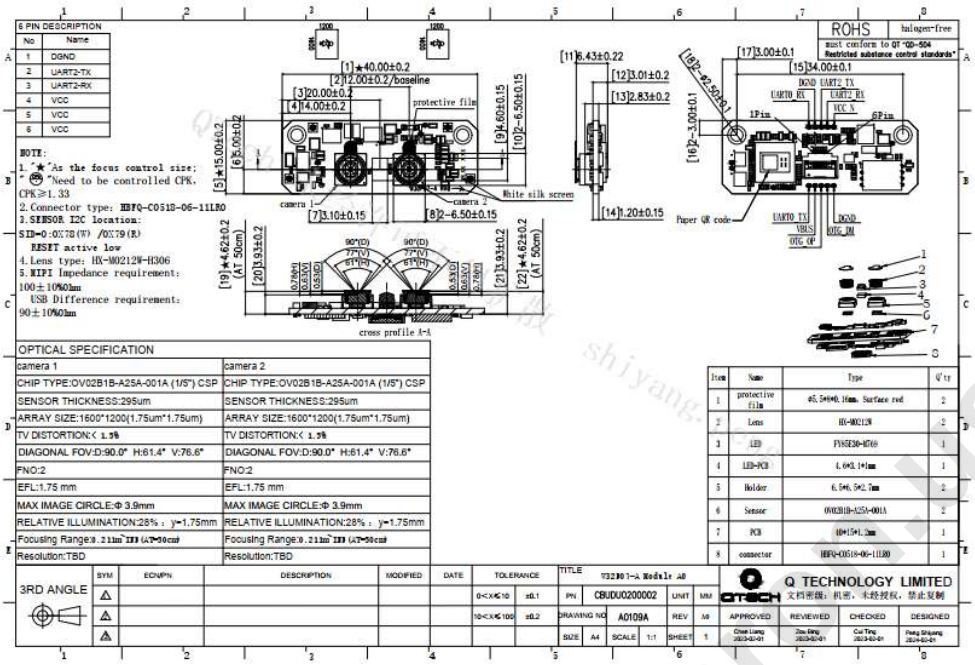

Figure 2: Module Structure

2.2. Key Components

Table 1: Key Parameters of the Module

Name	Key Components	
PCB	Flash	256Mbit
	Driver	1A， IIC
	LDO/DCDC	4 Channel/2A
		300mA /3.3V
	Level conversionchip	4Bit-Open Drain
Camera	Camera 1	Resolution 2M
		DFOV 90° * H61.4° * V76.6°
	Camera 2	Resolution 2M
		DFOV 90° * H61.4° * V76.6°
	Light source	850nm @0.7W

3. Product Dimensions

warren.kuo @ knen.com.hk

3.1. Board Appearance

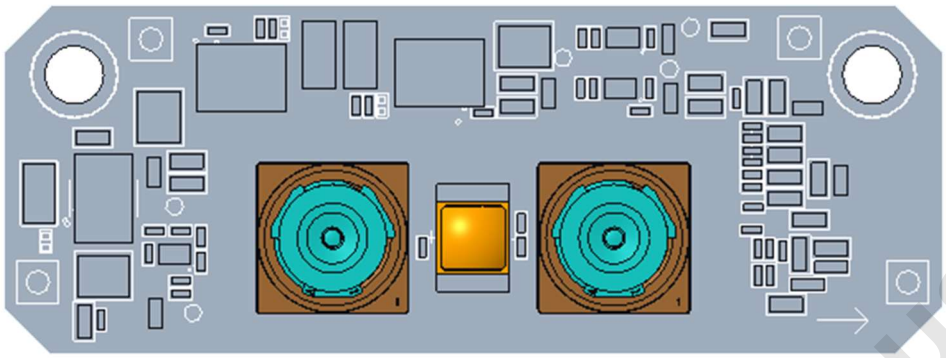

Figure 3: Top View of the module

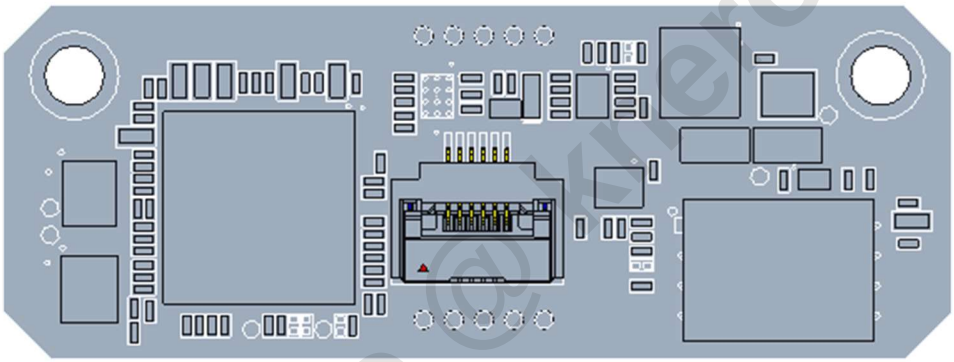

Figure 4: Bottom View of the Module

warren.kuo @ kneron.us

3.2. Board Dimensions

Length*Width: 40*15mm

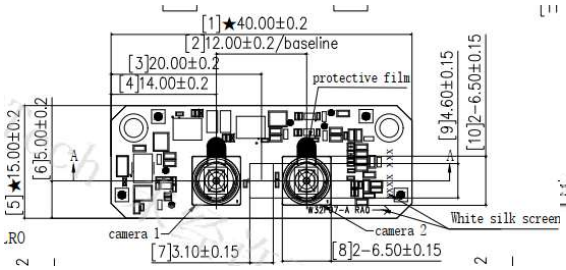

Figure 5: Module Top Size

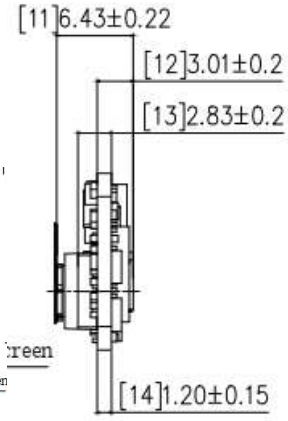

Figure 6: Module Side Size

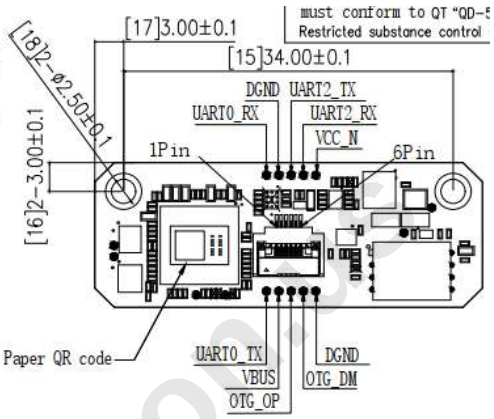

Figure 7: Module Back Size

3.3. Module Structure Decomposition

The module is mainly composed of two lenses, LED, motherboard and connectors.

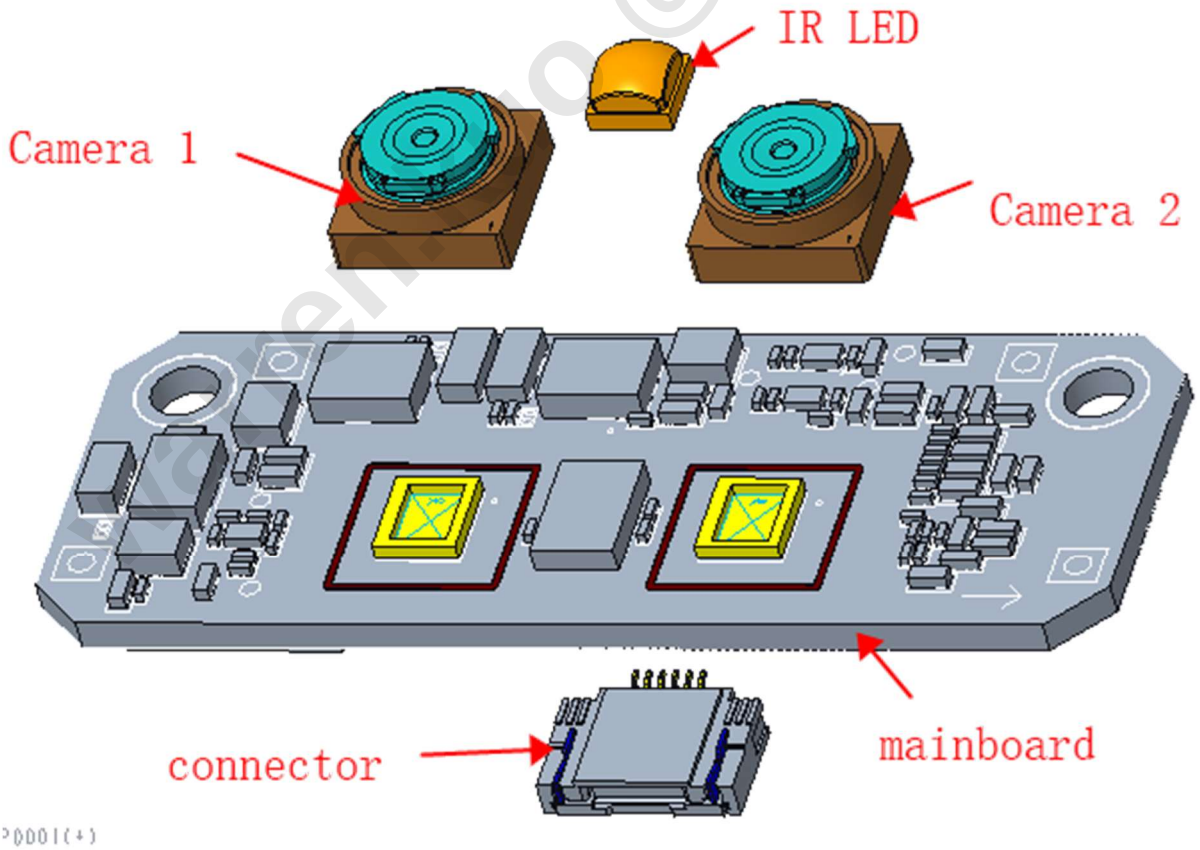

Karen.Qo @ kneron.us

Figure 8: Module Structure Decomposition

4. Product Specification

Table 2: Product Specification

Item	Description
CPU	Cotex-M4@200MHZ (system control) Cotex-M4@250MHZ (AI co-processor)
NPU	Max 300MHZ
SRAM	512KB
DRAM	64MB
Communication Interface	UART
Input Power	4.5~16V@2A
Max enrolled faces	100
Distance of recognition	0.4~0.9m（optimal 0.5m）
Height of recognition	1.2~2.1m
Time of recognition	≤1.2S
Liveness detection rate	>99%
Facial recognition rate	＞99.9%@FAR＜0.0001
Remote enrollment	YES
Average power consumption	<700mW
Work temperature	-25°C ~ 60°C
Storage temperature	-40°C ~ 85°C
Electrostatic process	Contact discharge ±2KV, Air discharge ±10KV

warren.kuo @ kneron.us

5. Interfaces and PIN Definitions

Figure 9 shows the basic diagram of door lock with facial recognition function. The module is equipped with AI algorithms and uses two cameras and a simple UART interface to interface with the master control, allowing users to simply use UART communication to obtain recognition results.

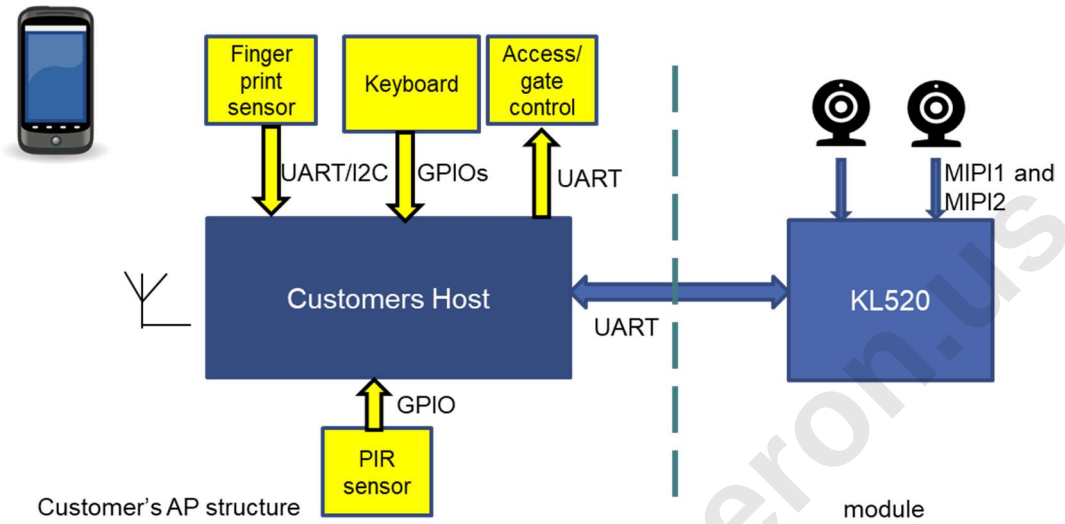

Figure 9: Interfaces and PIN Definitions

The bit number is J4 pin definition:

PIN 1: DGND

PIN 2: UART2_TX

PIN 3: UART2_RX

PIN 4, 5, 6: VCC_IN

PIN 7, 8 is positioning pin: DGND

Pin number and pin define can be found in Figure 10.

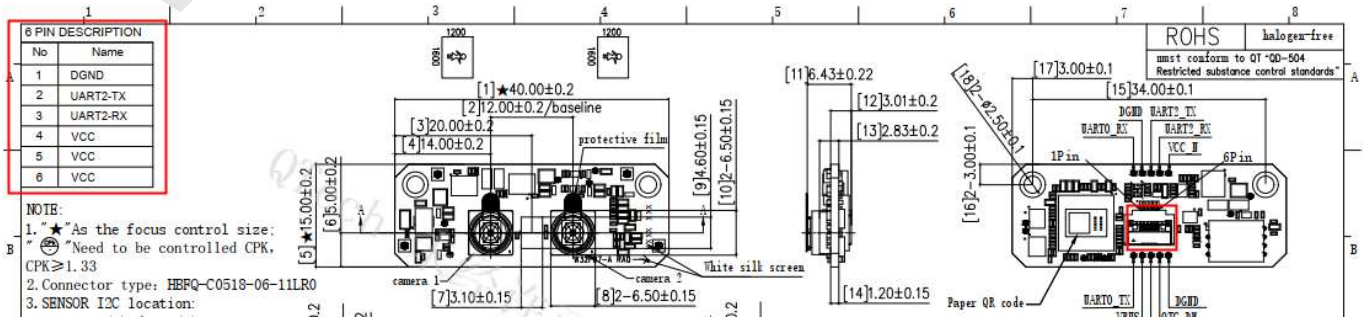

warren.kuo @ kneron.us

Figure 10: Pin number and pin define

The interface between the module and the main control is in plug-plug mode and defined in Figure 11. Two of the four lines are power supply lines, and the lock controller is responsible for the power supply. The power supply voltage range is 4.5-16V, the peak power supply current is 600mA @ 5V. The other two are UART communication lines which are connected to the module's UART communication interface.

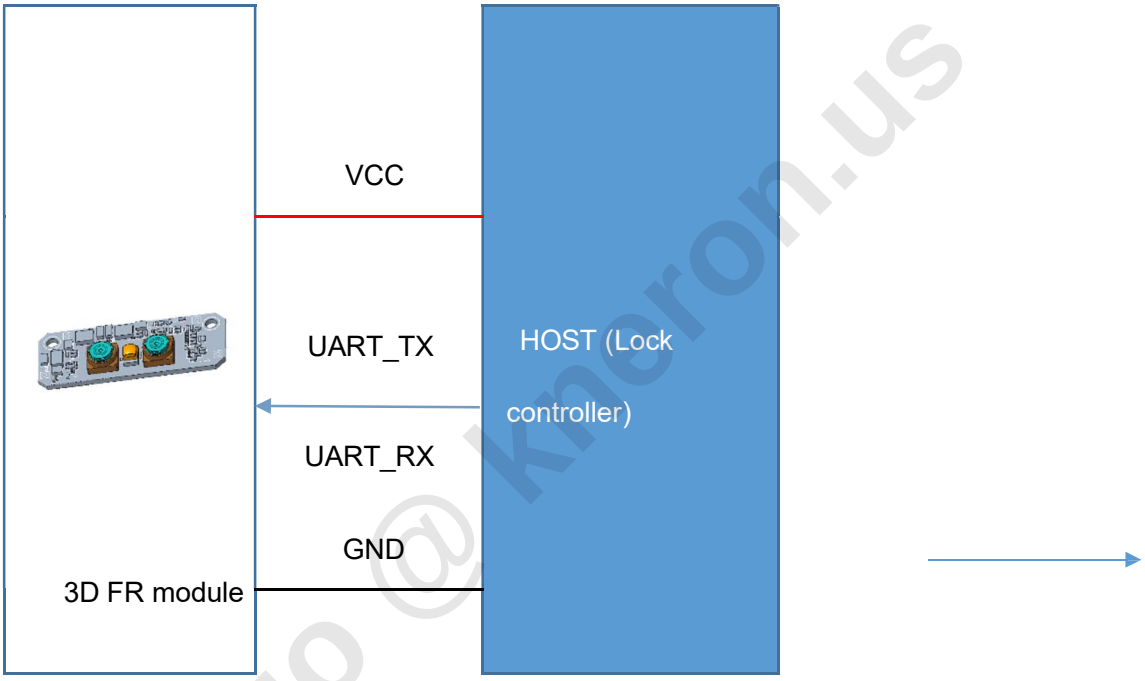

Figure 11: Module and the main control defined

- **Host IO state when entering sleep mode**

When module enters sleep mode, each Host IOs that connect to module should be:

- UART TX (connect to module's UART RX): high impedance or output low.
- UART RX (connect to module's UART TX): high impedance
- VCC_IN: shut down. 0V

- **Error Handling**

The UART of the module can send out the corresponding message as defined in previous section. If the module does not work properly for unknown reasons (interference, ESD, etc.), the Host can simply let the module's input power VCC_IN, PIN 4, power down for a period of time and then power up again. It should be noted that this means that the VCC_IN provided by the Host can be controlled. The VCC discharge time when the Host is trying to power off the module should be as short as possible.

warren.kuo @ kneron.us

- **PIR Sensor**

If the user's project has more stringent power consumption requirements, the PIR sensor can be connected to the user's lock controller (MCU or others) which is a "proximity sensing" sensor that will send a trigger signal to the main control when it detects a person approaching. Then, the main controller will power on the face module to do facial recognition or registration. After the face module has finished the task, the face module can be powered down again to reduce the standby power consumption.

6. Camera Module Image Test Specifications

This test specification is a general test requirement, and the specific parameters depend on the specific module.

Table 3: Product Parameters

No.	Item	Test Condition
1	MTF	a) Test chart: MTF chart; b) Test distance：50cm c) Wavelength coverage：850nm ± 50nm d) Luminous power：1.50 ± 0.2mw/cm² e) Test frequency: NY/4 f) 100% test
2	Y shading	a) Light source plate：850 infrared source b) Wavelength coverage：850 ± 10nm c) Luminous power：1.50 ± 0.2mw/cm² d) Measuring distance：<1cm e) 100% test
3	Particle and blemish	
4	Optical center shift	
5	Hotpixel	a) Test chart: black board b) Test distance：<1cm c) Brightness ：0Lux d) Setting：Max Again e) 100% test

warren.kuo @ kneron.us

7. Notes for the Enrollment

When registering, the user should keep a distance of approximately 50-70cm from the face module, face it, start slowly, center, left, center, right, center, up, center, down, and then finish. The user can also see the corresponding Log prompt in the corresponding programming tool.

8. Mechanic Considerations

The current design is the module end design, the whole machine is based on the actual design.

This chapter describes the mechanic considerations of the FR module.

8.1. Installation Orientation

This module needs to be installed in the correct direction as shown in Figure 12:

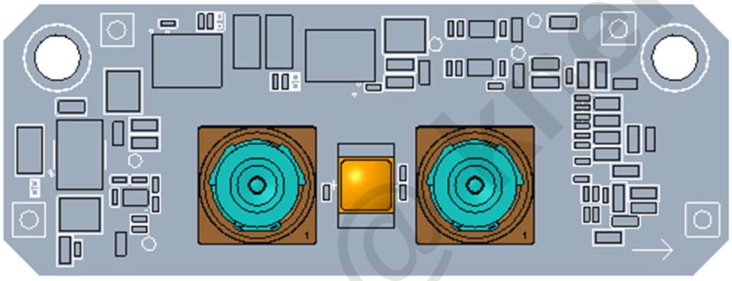

Figure 12: Correct installation direction

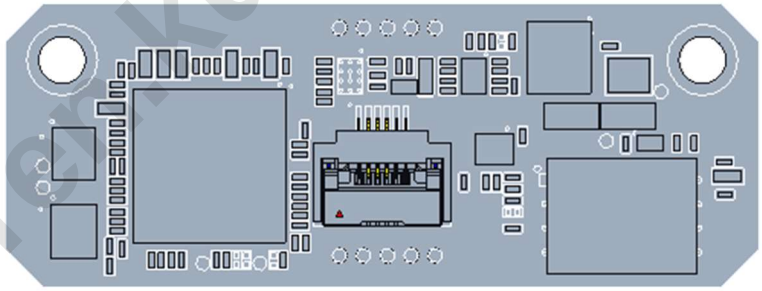

Figure 13: Incorrect installation direction

8.2. Angle of Camera Module

In order to be able to include a specific person's height, please refer to Figure 14. A lock angle will also need to be specified. To make the calculation evaluation easier, a calculator has been built-in.

warren.kuo @ikmaron.us

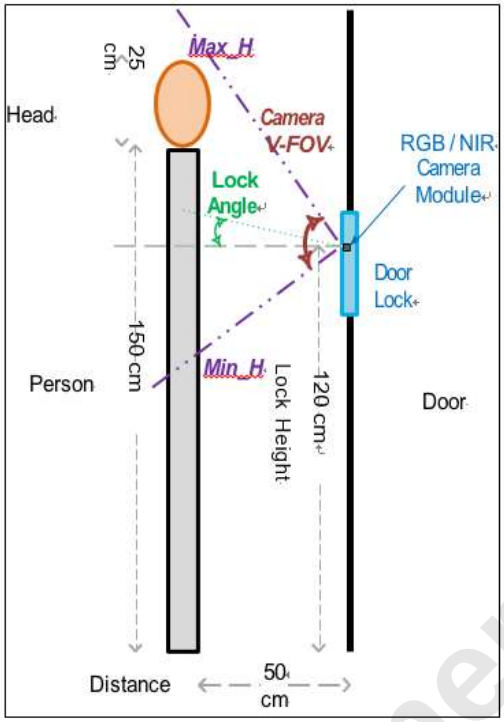

Figure 14: Lock angle need to be specified to fit certain human height

Users only need to input the

1. Distance between the person and door lock (default=50cm)
2. Lock Height (default=120cm)
3. Lock angle (default =25 degree)
4. V-FOV (vertical field of view) of two cameras (for module, if V- FOV=74.5 degree)

In the calculator. It will output the supported person's height. (by using these default values, the supported height is between 115~193cm)

Distance (cm)	50		
Lock Height (cm)	120		
Lock Angle (degree)	26		
Range	V-FOV (degree)	Max_H (cm)	Min_H (cm)
Camera 1 (RGB/IR)	55.4	188	119
Camera 2 (NIR)	55	18 8	119

input

output

.4

warren.kuo @ kneron.us

Figure 15: Calculator Inputs and Outputs

Note1: HFOV=61.4, this value also can be found in chapter 2.2.

Figure 16: Sensor Rotated 90 Degree in Module

8.3. Cover Lens on top of LED and Camera

There are normally two types of cover lens, PMMA and glass. Transmittance is the key. Please ensure that the light transmission is over 90% in the corresponding wavelength band, e.g. 850nm, 940nm and the visible band.

Scratch protection on the cover lens is also need to be considered.

8.4. The opening window of LED

The opening window of LED needs to be considered carefully. If this window is too small, users will see a noisy, blurry and ringing artifacts after adding smart lock housing.

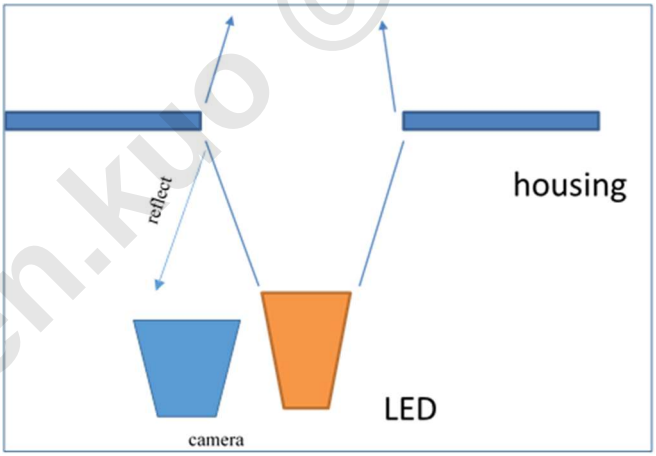

Figure 17: Small Opening Would Cause Refraction of Light

warren.kuo @ kneron.us

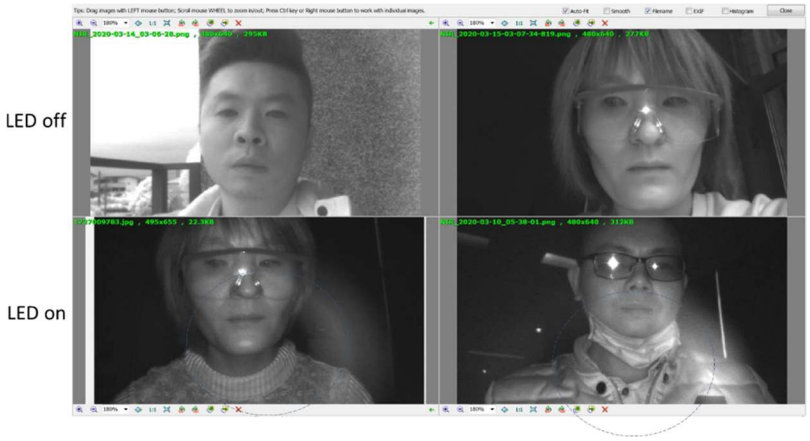

Figure 18: NIR Images (A ring of light-source can be seen if LED is turned on)

8.5. The Opening Window of Cameras

The opening window of camera will also needs to be taken into consideration. A bad camera opening design will cause a bad image captured from the camera with certain areas been blocked. Designers will need to ensure the cover will not block any camera visions.

Figure 19: Image Corners are Blocked

It is important to double-check the images from camera when the mechanic parts assembly is finished.

8.6. Distance between camera module and housing/cover lens

Similar to the section described in chapter 8.2 and 8.3, the cover should not reflect light from the LEDs nor block the view of the camera. It is strongly suggested that the distance between the cover and the camera to be as small as possible. Please refer to Figure 20:

warren.kao@kneron.us

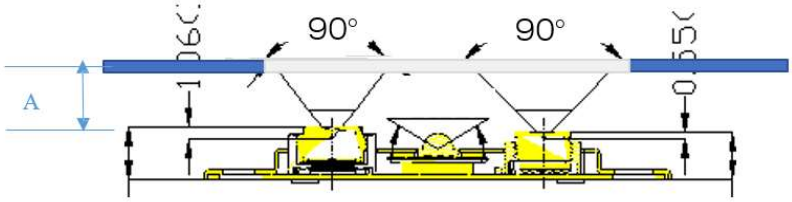

Figure 20: Distance between camera module and cover, A, need to be as small as possible.

It is advised that the distance A should be <=0.5mm

8.7. Case of Flat Cover

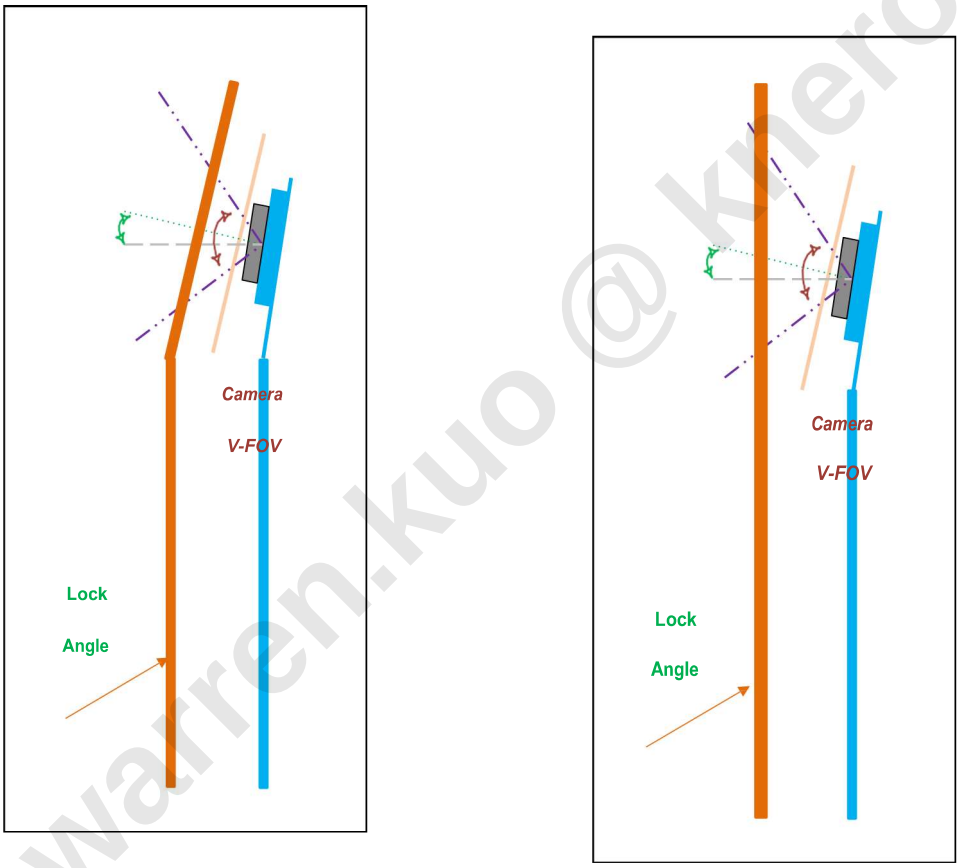

Please make sure the cover is flat and not bended as shown in Figure 21:

Cover is attached on top of camera module Cover is flat and not attach on camera module directly

Figure 21: The Cover is Flat and not Bended on the Right.

In order to make sure it can fit to the window opening on the cover and no LED interference on the camera, it is advised to make a conical shaped light shield as shown in Figure 22:

warren.kuo @ kneron.us

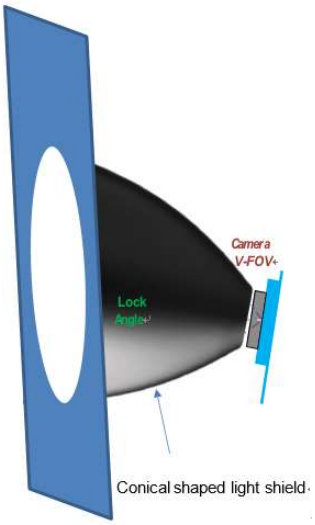

Figure 22: Conical Shaped Light Shield

It is strongly recommended that the distance between camera and cover (L) should be as small as possible. The vertical distance between the cover and the camera module should be smaller than 1mm.

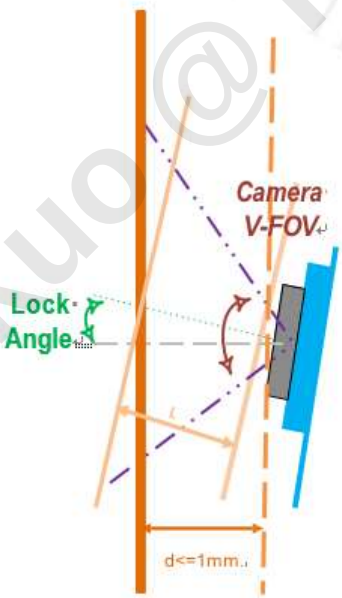

Figure 23: The Distance Between Camera and Cover

warren.kuo@kneron.us

9. Precautions

In order to avoid adverse accidents or impact to product performance, please comply with the following warnings and prohibitions.

9.1. Precautions for Storage

Store the product at a temperature of 22°C ± 5°C and a humidity of 40%~75%. Do not expose the product to direct sunlight or heavy weight.

9.2. Precautions for Usage

1) Do not rub the product with sharp blade or other sharp and pointy materials;
2) Do not arbitrarily pull or bend the folding products;
3) Do not stack the product to avoid scratching the surface and causing bad appearance;
4) Please avoid using and storing this product near or exposed to organic solvents and acidic gases;
5) Please do not arbitrarily peel or tear the product;
6) Please do not touch the product directly with bare hands. Please wear clean finger cover, gloves and mask before touching the product to avoid contaminating the through-light hole of the product, and hold the product around stably;
7) In order to maintain the best photo effect, do not press the surface of the lens;
8) Please pay attention to ESD protection. People in contact with the camera must wear electrostatic rings.

boot operation. The BL2 boot image must be stored in eMMC boot area partitions.

warren.kuo @ kneron.us

warren.kuo @ kneron.us

Mouser Electronics

Authorized Distributor

Click to View Pricing, Inventory, Delivery & Lifecycle Information:

Kneron:

KP52B137A-FR