CHERRY Snap Action Switches

CHERRY

CHERRY DG SERIES: SUB-SUBMINIATURE SNAP ACTION SWITCHES

Specifications:
- Package Size (In.) .504L x .228W x .255H

Typical Applications:
- Automotive
- Computer
- Medical Equipment

RoHS Compliant

For quantities greater than listed, call for quote.

MOUSER STOCK NO.	Cherry Part No.	Fig.	Terminal Type	Actuator Length: in.	Actuator Style	Operating Force	Operating Position: in.	Price Each 1	50	100	250
50mA 30 VDC											
540-DG23-B1LA	DG23-B1LA	A	Insertion Molded	0.169	Straight	140	.268+.031/-.016	2.09	1.71	1.50	1.39
540-DG23-B1RA	DG23-B1RA	B	Insertion Molded	0.075	Roller	140	.488±.020	4.10	3.42	2.94	2.70
540-DG23-B3LA	DG23-B3LA	C	Insertion Molded Left	0.169	Straight	140	.268+.031/-.016	2.08	1.74	1.50	1.37
3A 125 VAC, 2A 30 VDC											
540-DG13-B1AA	DG13-B1AA	D	Insertion Molded	-----	Button	140	.213±.008	1.89	1.58	1.30	1.18
540-DG13-B1LA	DG13-B1LA	A	Insertion Molded	0.169	Straight	140	.268+.031/-.016	2.04	1.70	1.46	1.34
540-DG13-B1RA	DG13-B1RA	B	Insertion Molded	0.075	Roller	140	.488±.020	3.84	3.20	2.76	2.52

CHERRY DB SERIES: SUBMINIATURE SNAP ACTION SWITCHES

Specifications:
- Package Size (In.) .787L x .256W x .355H
- DBxA: NO
- DBxB: NC
- DBxC: DT

Typical Applications:
- Amusement Machines
- Industrial Controls

RoHS Compliant

For quantities greater than listed, call for quote.

MOUSER STOCK NO.	Cherry Part No.	Fig.	Terminal Type	Actuator Length: in.	Actuator Style	Operating Force	Operating Position: in.	Price Each 1	50	100	250
UL 0.1A, 125-250 VAC; VDE 100mA, 250V											
540-DB3C-B1AA	DB3C-B1AA	E	.110 x 0.20 QC	-	Button	150g	.330±.012	2.17	1.73	1.41	1.30
540-DB3C-A1AA	DB3C-A1AA	F	.110 Short Solder	--	Button	150g	.330±.012	2.17	1.73	1.41	1.30
540-DB3C-B1LB	DB3C-B1LB	G	.110 x 0.20 QC	0.189	Lever SR	60g	.421±.051	2.48	1.98	1.64	1.48
540-DB3C-C1AA	DB3C-C1AA	H	.051 x 0.20 PCB	-----	Button	150g	.330±.012	2.17	1.73	1.41	1.30
UL 5.0A, 125-250 VAC; VDE 6A, 250V											
540-DB1C-A1AA	DB1C-A1AA	F	.110 Short Solder	-	Button	150g	.330±.012	1.97	1.59	1.30	1.18
540-DB1C-A1LB	DB1C-A1LB	I	.110 Short Solder	0.189	Lever SR	60g	.421±.051	2.21	1.84	1.51	1.38
540-DB1C-B1AA	DB1C-B1AA	E	.110 x 0.20 QC		Button	150g	.330±.012	1.97	1.59	1.30	1.18
540-DB1C-B1RC	DB1C-B1RC	J	.110 x 0.20 QC	0.185	Roller SR	55g	.638±.059	3.32	2.66	2.19	1.99
540-DB1C-C1AA	DB1C-C1AA	H	.051 x 0.20 PCB	-	Button	150g	.330±.012	1.97	1.59	1.30	1.18
UL 10.1A, 125-250 VAC 1/4 HP, 125 VAC; VDE 10 (1.5) A, 250V											
540-DB2C-A1RC	DB2C-A1RC	K	.110 Short Solder	0.185	Roller SR	95g	.638±.071	3.30	2.64	2.18	1.98
540-DB2C-B1AA	DB2C-B1AA	E	.110 x 0.20 QC	-	Button	250g	.330±.012	1.97	1.59	1.30	1.18
540-DB2C-B1RC	DB2C-B1RC	J	.110 x 0.20 QC	0.185	Roller SR	95g	.638±.071	3.32	2.66	2.19	1.99
540-DB2C-C1AA	DB2C-C1AA	H	.051 x 0.20 PCB	-	Button	250g	.330±.012	1.97	1.59	1.30	1.18

CHERRY E SERIES: SUBMINIATURE SNAP ACTION SWITCHES

Specifications:
- Package Size (In.) .781L x .250W x .352H

Typical Applications:
- Amusement Machines
- Appliances

RoHS Compliant

For quantities greater than listed, call for quote.

MOUSER STOCK NO.	Cherry Part No.	Fig.	Terminal Type	Actuator Length: in.	Actuator Style	Operating Force	Operating Position: in.	Price Each 1	50	100	250
0.1A, 125 VAC											
540-E63-00H	E63-00H	L	.093 Q.C.	0.271	Straight	27g	0.350±0.030	5.13	4.10	3.38	3.08
540-E63-00K	E63-00K	M	.093 Q.C.	0.201	Roller	30g	0.570±0.030	5.76	4.80	4.14	3.79
540-E63-10H	E63-10H	N	.143 Short Solder	0.271	Straight	27g	0.350±0.030	5.35	4.28	3.53	3.21
540-E63-10K	E63-10K	O	.143 Short Solder	0.201	Roller	30g	0.570±0.030	5.56	4.64	4.00	3.66
540-E63-30K	E63-30K	M	.110 Q.C.	0.201	Roller	30g	0.570±0.030	5.71	4.76	4.10	3.76
5A, 125/250 VAC											
540-E61-00A	E61-00A	P	.093 Q.C.	-----	Button	90g	0.330±0.015	3.60	3.00	2.58	2.37
540-E61-00H	E61-00H	L	.093 Q.C.	0.271	Straight	27g	0.350±0.030	5.18	4.32	3.99	3.24
540-E61-00K	E61-00K	M	.093 Q.C.	0.201	Roller	30g	0.570±0.030	5.49	4.58	3.95	3.61
540-E61-10A	E61-10A	Q	.143 Short Solder	-----	Button	90g	0.330±0.015	3.60	3.00	2.58	2.37
540-E61-10H	E61-10H	N	.143 Short Solder	0.271	Straight	27g	0.350±0.030	5.18	4.32	3.99	3.24
540-E61-10K	E61-10K	O	.143 Short Solder	0.201	Roller	30g	0.570±0.030	5.49	4.58	3.95	3.61
540-E61-30A	E61-30A	P	.110 Q.C.	-----	Button	90g	0.330±0.015	3.60	3.00	2.58	2.37
540-E61-30K	E61-30K	M	.110 Q.C.	0.201	Roller	27g	0.350±0.030	5.39	4.31	3.55	3.23
540-E61-60H	E61-60H	N	.143 Short Solder	0.396	Straight HR	9g	0.350±0.175	5.18	4.32	3.99	3.24
10.1A, 125/250 VAC											
540-E62-00A	E62-00A	P	.093 Q.C.	-----	Button	212g	0.330±0.015	4.08	3.40	2.93	2.68
540-E62-00H	E62-00H	L	.093 Q.C.	0.271	Straight	5g6	0.350±0.030	5.18	4.32	3.99	3.24
540-E62-00K	E62-00K	M	.093 Q.C.	0.201	Roller	65g	0.570±0.030	5.95	4.96	4.27	3.91
540-E62-10A	E62-10A	Q	.143 Short Solder	-----	Button	212g	0.330±0.015	4.08	3.40	2.93	2.68
540-E62-10H	E62-10H	N	.143 Short Solder	0.271	Straight	5g6	0.350±0.030	5.18	4.32	3.99	3.24
540-E62-30A	E62-30A	P	.110 Q.C.	-----	Button	212g	0.330±0.015	4.00	3.20	2.64	2.39
540-E62-50K	E62-50K	M	.093 Q.C.	0.326	Roller HR	33g	0.570±0.158	5.84	4.67	3.85	3.49
540-E62-60H	E62-60H	N	.143 Short Solder	0.396	Straight HR	20g	0.350±0.175	4.73	4.19	3.72	3.53

DIMENSIONS: in.

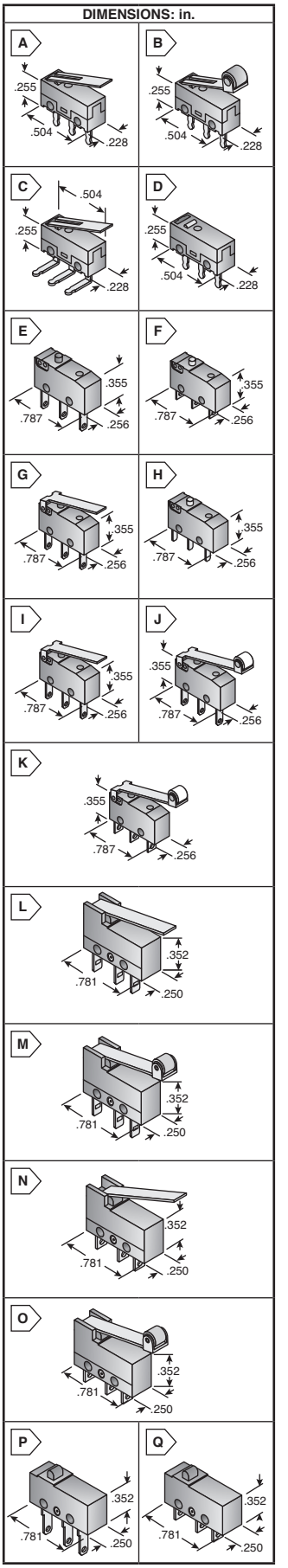

© Copyright 2012 Mouser Electronics

© Copyright 2012 Mouser Electronics